Analog Sound Processor series

Sound Processor with Built-in Surround Sound Function

BD3491FS

General Description

Built in stereo 6 input selectors and volume that there is not an impedance change of a volume terminal. And this is sound processor can realize 2-band equalizer (Bass/Treble, Gain±14dB / 2dB_step) and BassBoost, Output gain, Surround by external components.

Features

- Equipped with 6 single ended stereo input selectors
- Built-in input gain controller suitable for mobile audio.
- Volume input terminal can be used as a microphone input terminal since its impedance remains constant even if volume setting is changed.
- Bi-CMOS process is suitable for the design of low current and low energy. It also provides more quality for Bi-CMOS small scale regulator and heat in a set.
- The package of this IC is SSOP-A32. Sound input terminals and output terminals arrangement is optimized for easy and fast layout of PCB pattern. At the same time, it minimizes PCB area.

Applications

- Suitable for mini-components or micro components. Used for audio equipment of TV, DVD, etc.

Key Specification

- Current upon no signal: 7mA(typ)
- Total Harmonic Distortion: 0.002%(typ)
- Maximum Input Voltage: 2.4Vrms(typ)
- Crosstalk between Selectors: 100dB(typ)
- Volume Control Range: 0dB to -87dB
- Output Noise Voltage: 5μVrms(typ)
- Residual Output Noise Voltage: 5μVrms(typ)
- Operating Temperature Range: -40℃ to +85℃

Package	W(typ) x D(typ) x H(max)
SSOP-A32	13.60mm x 7.80mm x 2.01mm



SSOP-A32

Typical Application Circuit

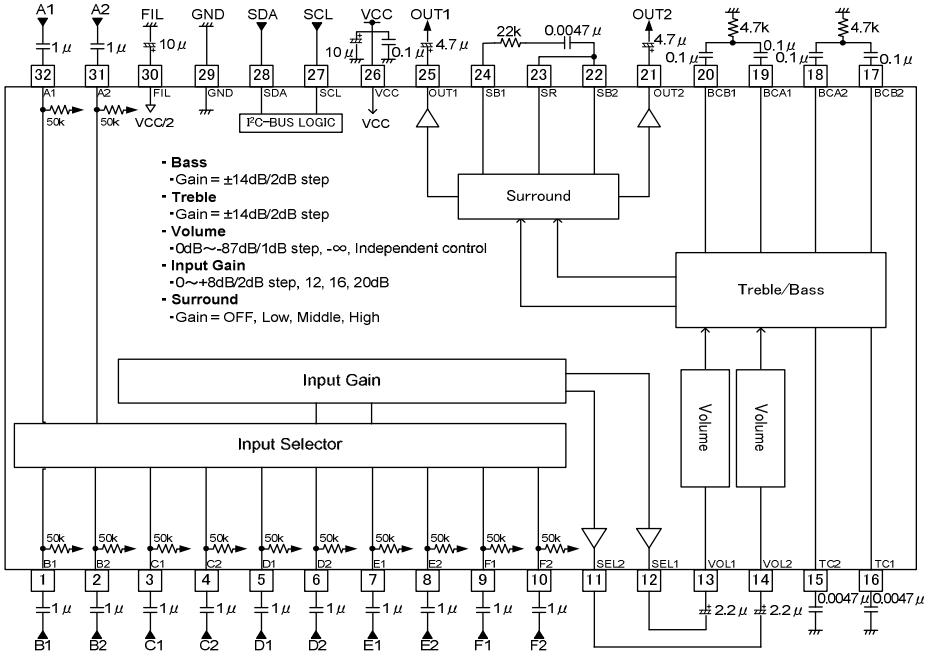

Figure 1. Application Circuit Diagram

© 2013 ROHM Co., Ltd. All rights reserved.

Downloaded from Arrow.com.

Pin Configuration

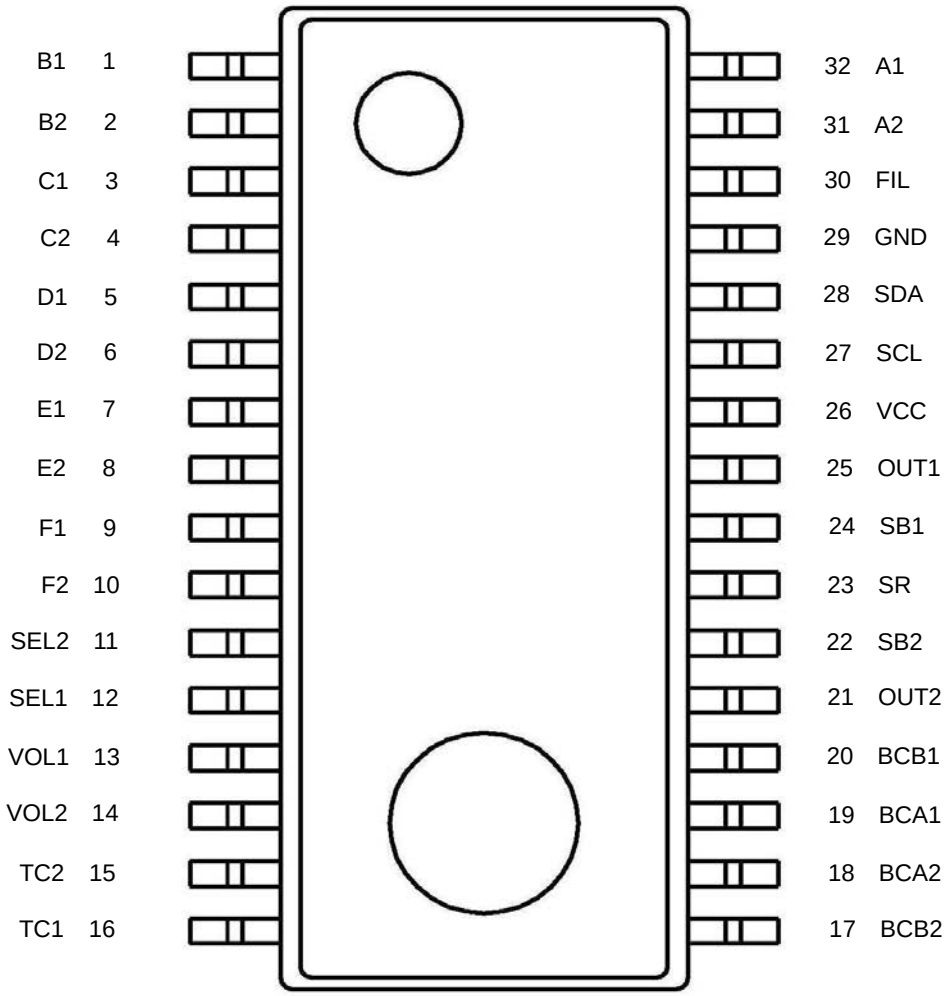

Figure 2. Pin Configuration

Pin Descriptions

Terminal Number	Terminal Name	Description	Terminal Number	Terminal Name	Description
1	B1	Ch1 of B input terminal	17	BCB2	Ch2 of Bass filter terminal
2	B2	Ch2 of B input terminal	18	BCA2	Ch2 of Bass filter terminal
3	C1	Ch1 of C input terminal	19	BCA1	Ch1 of Bass filter terminal
4	C2	Ch2 of C input terminal	20	BCB1	Ch1 of Bass filter terminal
5	D1	Ch1 of D input terminal	21	OUT2	Ch2 of Output terminal
6	D2	Ch2 of D input terminal	22	SB2	Ch2 of Bass boost terminal
7	E1	Ch1 of E input terminal	23	SR	Surround terminal
8	E2	Ch2 of E input terminal	24	SB1	Ch1 of Bass boost terminal
9	F1	Ch1 of F input terminal	25	OUT1	Ch1 of Output terminal
10	F2	Ch2 of F input terminal	26	VCC	Power supply terminal
11	SEL2	Ch2 of selector output terminal	27	SCL	Serial communication clock terminal
12	SEL1	Ch1 of selector output terminal	28	SDA	Serial communication data terminal
13	VOL1	Ch1 of Volume input terminal	29	GND	GND terminal
14	VOL2	Ch2 of Volume input terminal	30	FIL	VCC/2 terminal
15	TC2	Ch2 of Treble filter terminal	31	A2	Ch2 of A input terminal
16	TC1	Ch1 of Treble filter terminal	32	A1	Ch1 of A input terminal

© 2013 ROHM Co., Ltd. All rights reserved.

Downloaded from Arrow.com.

Block Diagram

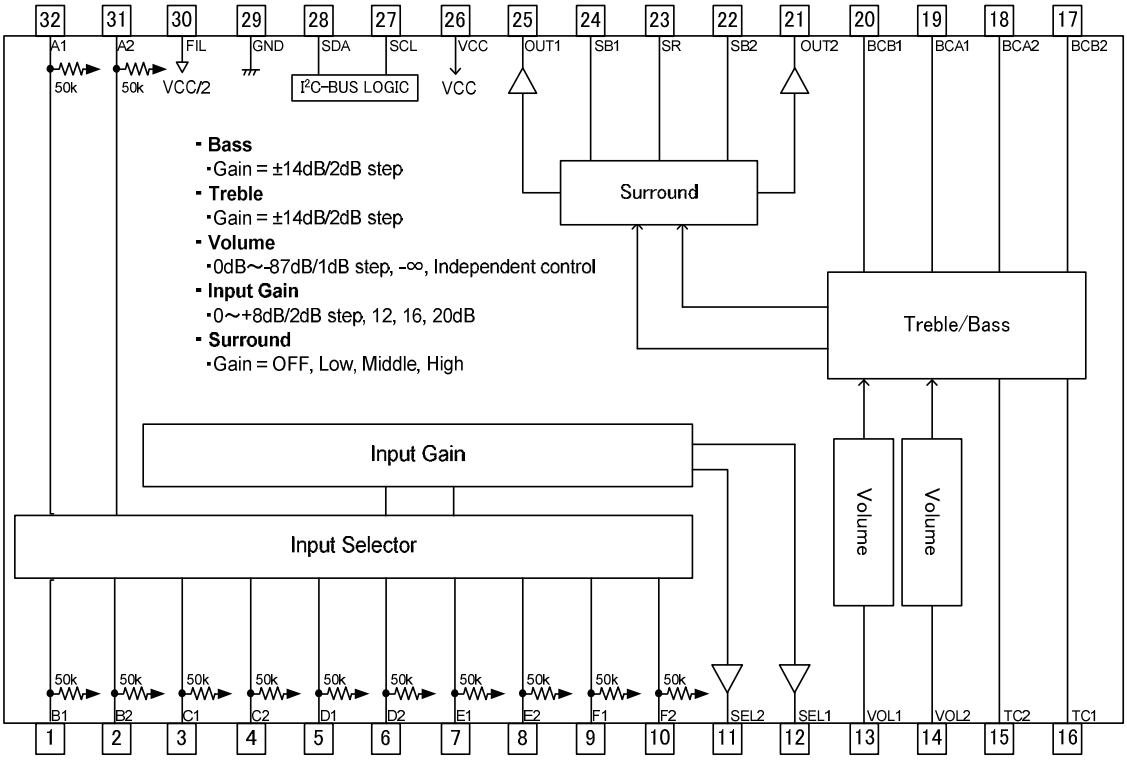

Figure 3. Block Diagram

Absolute Maximum Ratings

Parameter	Symbol	Limits	Unit
Power supply Voltage	VCC	10.0	V
Input Voltage	Vin	VCC+0.3 to GND-0.3 SCL,SDA only 7 to GND-0.3	V
Power Dissipation	Pd	0.95 ※1	W
Storage Temperature	Tastg	-55 to +150	℃

※1 Derate by 7.6mW/℃ for Ta=25℃ or more.
ROHM standard board shall be mounted. Thermal resistance θja = 131.6(℃/W)。
ROHM standard board Size:70×70×1.6(㎜)
Material: A FR4 grass epoxy board (3% or less of copper foil area)

Operating Range

Parameter	Symbol	Limits	Unit
Power supply voltage	VCC	4.75 to 9.5	V
Temperature	Topr	-40 to +85	℃

© 2013 ROHM Co., Ltd. All rights reserved.

Downloaded from Arrow.com.

Electrical Characteristics

(Unless specified particularly, Ta=25℃, VCC=9.0V, f=1kHz, Vin=1Vrms, Rg=600Ω, RL=10kΩ, A input, Input gain 0dB, Volume 0dB, Bass 0dB, Treble 0dB, Surround Mode OFF, Surround Gain = OFF)

BLOCK	Item	Symbol	Limit			Unit	Condition
			Min.	Typ.	Max.		
GENERAL	Current upon no signal	I_Q	–	7	15	mA	No signal
	Voltage Gain	G_V	-1.5	0	+1.5	dB	Gv=20log(Vout/Vin)
	Channel Balance	CB	-1.5	0	+1.5	dB	CB = G_{V1}-G_{V2}
	Total Harmonic Distortion	THD+N	–	0.002	0.1	%	Vout=1Vrms BW=400-30kHz
	Output Noise Voltage	V_{NO}	–	5	20	μVrms	Rg = 0Ω BW = IHF-A
	Residual Output Noise Voltage	V_{NOR}	–	5	20	μVrms	Rg = 0Ω BW = IHF-A Volume = -∞
	Crosstalk between Channels	CTC	–	-100	-80	dB	Rg = 0Ω CTC=20log(Vout2/Vout1) BW = IHF-A
INPUT SELECTOR	Input Impedance	R_{IN}	35	50	65	kΩ	
	Maximum Input Voltage	V_{IM}	2.1	2.4	-	Vrms	V_{IM} at THD+N(Vout)=1% BW=400-30kHz
	Crosstalk between Selectors	CTS	–	-100	-84	dB	Rg = 0Ω CTS=20log(Vout/Vin) BW = IHF-A
VOLUME	Control Range	$G_{V\ MAX}$	-90	-87	-84	dB	Vin=2Vrms Gv=20log(Vout/Vin)
	Maximum Attenuation	$G_{V\ MIN}$	–	-100	-80	dB	Volume = -∞ Gv=20log(Vout/Vin)
BASS	Maximum Boost Gain	$G_{B\ BST}$	11.5	14	16.5	dB	Gain = 14dB, f = 100Hz Vin=100mVrms Gv=20log(Vout/Vin)
	Maximum Cut Gain	$G_{B\ CUT}$	-16.5	-14	-11.5	dB	Gain = -14dB, f = 100Hz Vin=2Vrms Gv=20log(Vout/Vin)
TREBLE	Maximum Boost Gain	$G_{T\ BST}$	11.5	14	16.5	dB	Gain = 14dB, f = 10kHz Vin=100mVrms Gv=20log(Vout/Vin)
	Maximum Cut Gain	$G_{T\ CUT}$	-16.5	-14	-11.5	dB	Gain = -14dB, f = 10kHz Vin=2Vrms Gv=20log(Vout/Vin)

※Phase between input / output is same.

© 2013 ROHM Co., Ltd. All rights reserved.

Downloaded from Arrow.com.

Typical Performance Curves

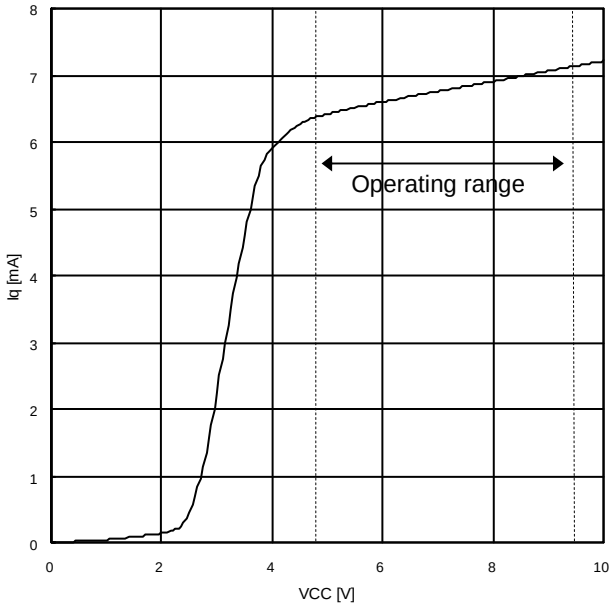

Figure 4. Vcc vs. Iq

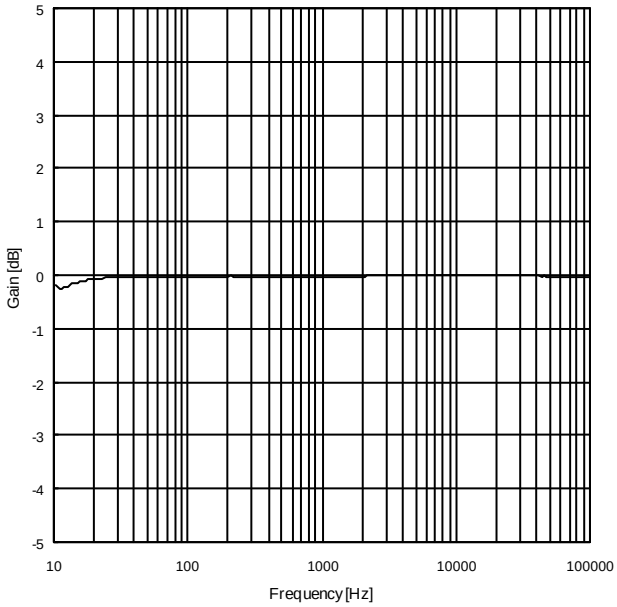

Figure 5. Gain vs. Frequency

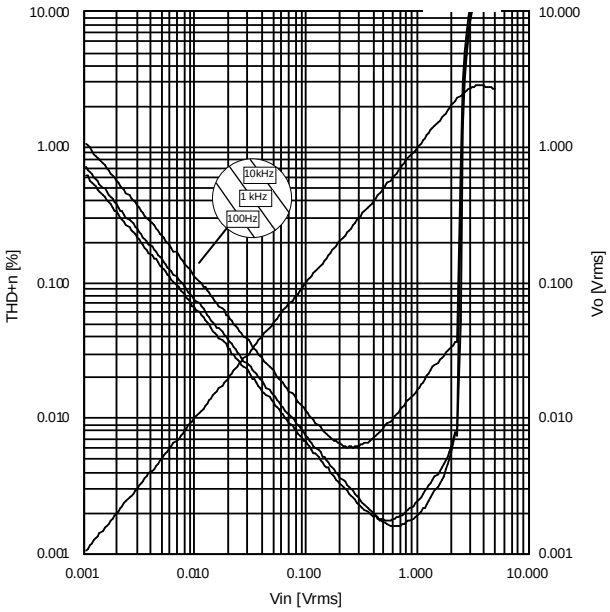

Figure 6. THD+N,Vo vs. Vin

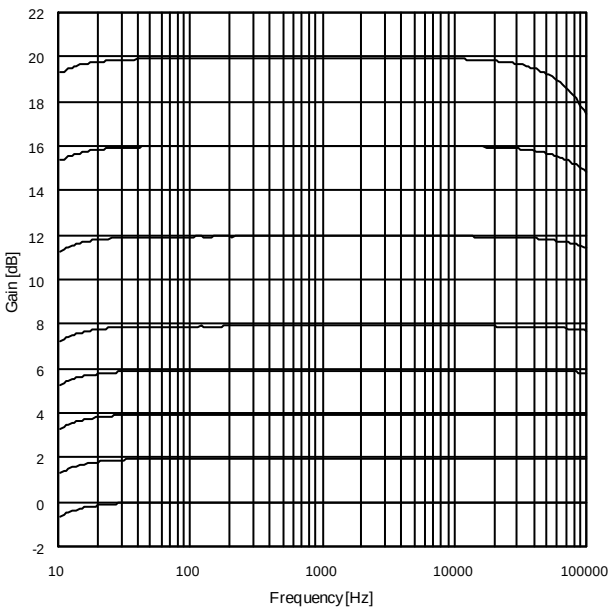

Figure 7. Input Gain vs. Frequency.

© 2013 ROHM Co., Ltd. All rights reserved.

Downloaded from Arrow.com.

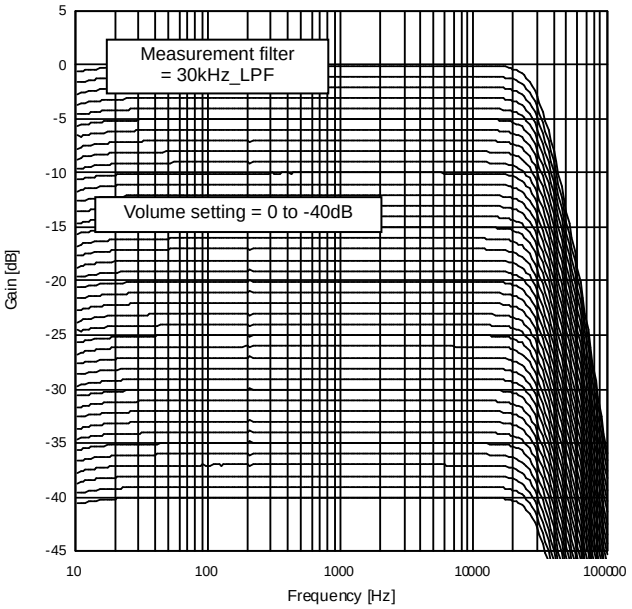

Figure 8. Volume Attenuation 1

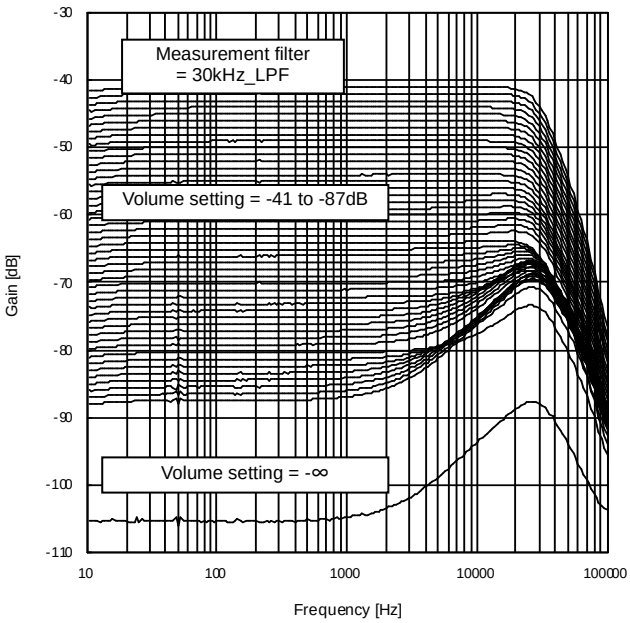

Figure 9. Volume Attenuation 2

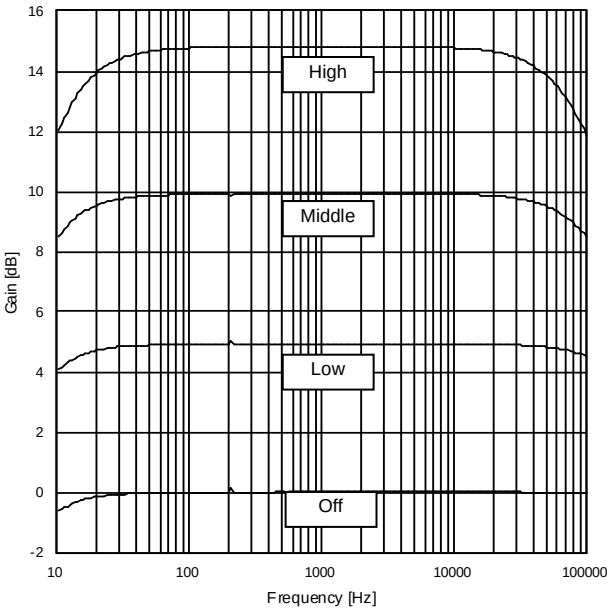

Figure 10. Output Gain vs. Frequency

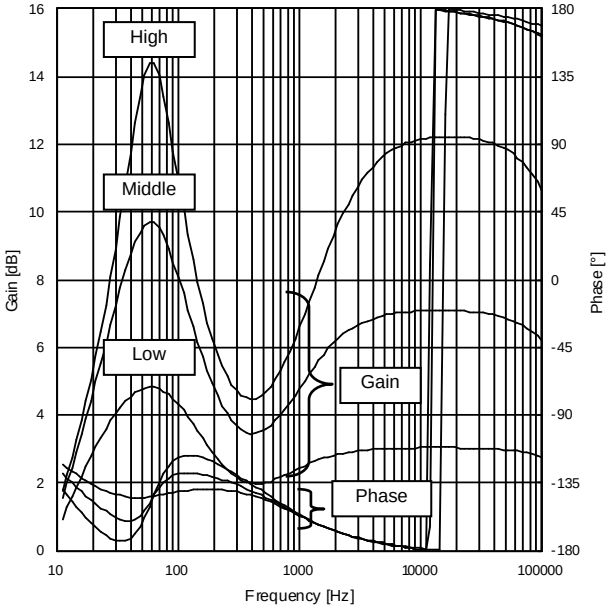

Figure 11. BassBoost & Surround

© 2013 ROHM Co., Ltd. All rights reserved.

Downloaded from Arrow.com.

CONTROL SIGNAL SPECIFICATION

(1) Electrical specifications and timing for bus lines and I/O stages

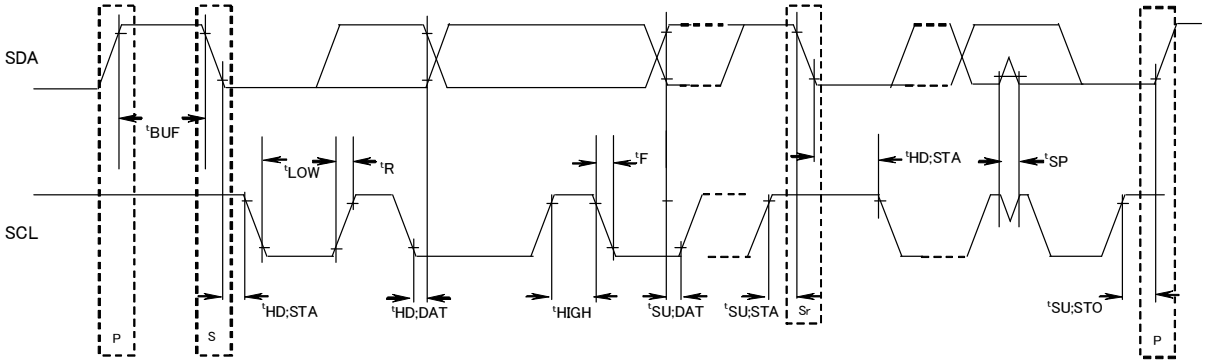

Figure 12. Definition of timing on the I²C-BUS

Table 1. Characteristics of the SDA and SCL bus lines for I²C-BUS devices

	Parameter	Symbol	Fast-mode		Unit
			Min.	Max.	
1	SCL clock frequency	fSCL	0	400	kHz
2	Bus free time between a STOP and START condition	tBUF	1.3	–	µs
3	Hold time (repeated) START condition. After this period, the first clock pulse is generated	tHD;STA	0.6	–	µs
4	LOW period of the SCL clock	tLOW	1.3	–	µs
5	HIGH period of the SCL clock	tHIGH	0.6	–	µs
6	Set-up time for a repeated START condition	tSU;STA	0.6	–	µs
7	Data hold time	tHD;DAT	300*	–	ns
8	Data set-up time	tSU;DAT	300*	–	ns
9	Set-up time for STOP condition	tSU;STO	0.6	–	µs

All values referred to VIH min and VIL max levels (see Table 2).
*About 7(tHD;DAT), 8(tSU;DAT), make it the setup which a margin is fully in .

Table 2. Characteristics of the SDA and SCL I/O stages for I²C-BUS devices

	Parameter	Symbol	Fast-mode		Unit
			Min.	Max.	
10	LOW level input voltage:	VIL	-0.3	1	V
11	HIGH level input voltage:	VIH	2.3	5	V
12	Pulse width of spikes which must be suppressed by the input filter.	tSP	0	50	ns
13	LOW level output voltage (open drain or open collector): at 3mA sink current.	VOL1	0	0.4	V
14	Input current in each I/O pin with an input voltage between 0.4V and 4.5V.	Ii	-10	10	µA

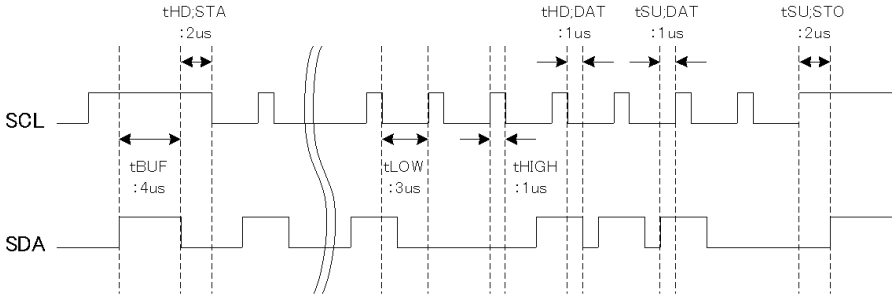

SCL clock frequency:250kHz

Figure 13. A command timing example in the I²C data transmission.

© 2013 ROHM Co., Ltd. All rights reserved.

Downloaded from Arrow.com.

(2) I²C-BUS FORMAT

	MSB LSB		MSB LSB		MSB LSB		
S	Slave Address	A	Select Address	A	Data	A	P
1bit	8bit	1bit	8bit	1bit	8bit	1bit	1bit

S = Start conditions (Recognition of start bit)
Slave Address = Recognition of slave address. 7 bits in upper order are voluntary. The least significant bit is "L" due to writing.
A = ACKNOWLEDGE bit (Recognition of acknowledgement)
Select Address = Select every of volume, bass and treble.
Data = Data on every volume and tone.
P = Stop condition (Recognition of stop bit)

(3) I²C-BUS Interface Protocol

1) Basic form

S	Slave Address	A	Select Address	A	Data	A	P
	MSB LSB		MSB LSB		MSB LSB		

2) Automatic increment (Assigned select Address is increased according to the number of data.)

S	Slave Address	A	Select Address	A	Data1	A	Data2	A	····	DataN	A	P
	MSB LSB		MSB LSB		MSB LSB		MSB LSB			MSB LSB		

No.1. Data1 is set as data of address specified by Select Address.
No.2. Data2 is set as data of next address from the address specified by No.1.
No.3. DataN is set as data of address incremented N-1 times from the address specified by No.1.

Circulation of Select Address by the automatic increment function is shown below.

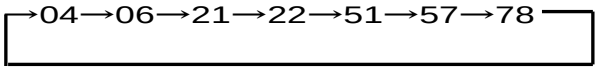

3) Configuration unavailable for transmission (In this case, only Select Address1 is set properly.)

S	Slave Address	A	Select Address1	A	Data	A	Select Address 2	A	Data	A	P
	MSB LSB		MSB LSB		MSB LSB		MSB LSB		MSB LSB		

(Note)If any data is transmitted as Select Address 2 next to data, it is recognized as data, not as Select Address 2.

(4) Slave Address

MSB							LSB
A6	A5	A4	A3	A2	A1	A0	R/W
1	0	0	0	0	0	1	0

82H

© 2013 ROHM Co., Ltd. All rights reserved.

Downloaded from Arrow.com.

(5) Select Address & Data

Items	Select Address (hex)	MSB Data LSB							
		D7	D6	D5	D4	D3	D2	D1	D0
Input Selector	04	0	0	0	0	0	Input Selector		
Input Gain	06	0	0	0	Input Gain				0
Volume Gain 1ch	21	1	Volume Attenuation 1ch						
Volume Gain 2ch	22	1	Volume Attenuation 2ch						
Bass Gain	51	Bass Boost/Cut	0	0	0	Bass Gain			0
Treble Gain	57	Treble Boost/Cut	0	0	0	Treble Gain			0
Surround	78	Surround Mode	0	0	0	Surround Gain			
Test Mode	F0	0	0	0	0	0	0	0	0
System Reset	FE	1	0	0	0	0	0	0	1

About the register that a function isn't assigned(above table, D0～D7 is "0" or "1"), set it up as the value of the above table.

Note:

Upon continuous data transfer, the Select Address is circulated by the automatic increment function, as shown below.

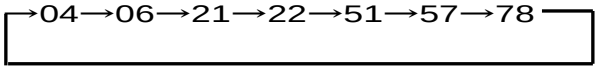

© 2013 ROHM Co., Ltd. All rights reserved.

Downloaded from Arrow.com.

Select Address 04 (hex)

Mode	MSB			Input Selector				LSB
	D7	D6	D5	D4	D3	D2	D1	D0
A	0	0	0	0	0	0	0	0
B						0	0	1
C						0	1	0
D						0	1	1
E						1	0	0
F						1	1	0
INPUT SHORT						1	0	1
INPUT MUTE						1	1	1

INPUT MUTE : Mute is done at the input signal in the part of Input Selector.

Select Address 06 (hex)

Gain	MSB			Input Gain				LSB
	D7	D6	D5	D4	D3	D2	D1	D0
0dB	0	0	0	0	0	0	0	0
2dB				0	0	0	1	
4dB				0	0	1	0	
6dB				0	0	1	1	
8dB				0	1	0	0	
12dB				0	1	1	0	
16dB				1	0	0	0	
20dB				1	0	1	0	
Prohibition				0	1	0	1	
				0	1	1	1	
				1	0	0	1	
				1	0	1	1	
				1	1	0	0	
				1	1	0	1	
				1	1	1	0	
				1	1	1	1	

About Input Gain, the allotment of D4/D3/D2/D1 is discontinuous, please be careful.

: Initial condition

© 2013 ROHM Co., Ltd. All rights reserved.

Downloaded from Arrow.com.

Select Address 21, 22 (hex)

Attenuation	MSB	Volume Attenuation						LSB
	D7	D6	D5	D4	D3	D2	D1	D0
0dB	1	0	0	0	0	0	0	0
-1dB		0	0	0	0	0	0	1
-2dB		0	0	0	0	0	1	0
-3dB		0	0	0	0	0	1	1
-4dB		0	0	0	0	1	0	0
-5dB		0	0	0	0	1	0	1
-6dB		0	0	0	0	1	1	0
-7dB		0	0	0	0	1	1	1
-8dB		0	0	0	1	0	0	0
-9dB		0	0	0	1	0	0	1
-10dB		0	0	0	1	0	1	0
-11dB		0	0	0	1	0	1	1
-12dB		0	0	0	1	1	0	0
-13dB		0	0	0	1	1	0	1
-14dB		0	0	0	1	1	1	0
-15dB		0	0	0	1	1	1	1
-16dB		0	0	1	0	0	0	0
-17dB		0	0	1	0	0	0	1
-18dB		0	0	1	0	0	1	0
-19dB		0	0	1	0	0	1	1
-20dB		0	0	1	0	1	0	0
-21dB		0	0	1	0	1	0	1
-22dB		0	0	1	0	1	1	0
⋮		⋮	⋮	⋮	⋮	⋮	⋮	⋮
-83dB		1	0	1	0	0	1	1
-84dB		1	0	1	0	1	0	0
-85dB		1	0	1	0	1	0	1
-86dB		1	0	1	0	1	1	0
-87dB		1	0	1	0	1	1	1
Prohibition		1	0	1	1	0	0	0
		⋮	⋮	⋮	⋮	⋮	⋮	⋮
		1	1	1	1	1	1	0
-∞dB		1	1	1	1	1	1	1

: Initial condition

© 2013 ROHM Co., Ltd. All rights reserved.

Downloaded from Arrow.com.

Select Address 51(hex)

Gain	MSB Bass Gain LSB							
	D7	D6	D5	D4	D3	D2	D1	D0
0dB	Bass Boost /Cut	0	0	0	0	0	0	0
2dB					0	0	1	
4dB					0	1	0	
6dB					0	1	1	
8dB					1	0	0	
10dB					1	0	1	
12dB					1	1	0	
14dB					1	1	1	

Mode	MSB Bass Boost/Cut LSB							
	D7	D6	D5	D4	D3	D2	D1	D0
Boost	0	0	0	0	Bass Gain			0
Cut	1							

Select Address 57(hex)

Gain	MSB Treble Gain LSB							
	D7	D6	D5	D4	D3	D2	D1	D0
0dB	Treble Boost /Cut	0	0	0	0	0	0	0
2dB					0	0	1	
4dB					0	1	0	
6dB					0	1	1	
8dB					1	0	0	
10dB					1	0	1	
12dB					1	1	0	
14dB					1	1	1	

Mode	MSB Treble Boost/Cut LSB							
	D7	D6	D5	D4	D3	D2	D1	D0
Boost	0	0	0	0	Treble Gain			0
Cut	1							

: Initial condition

© 2013 ROHM Co., Ltd. All rights reserved.

Downloaded from Arrow.com.

Select Address 78(hex)

Gain	MSB Surround Gain LSB							
	D7	D6	D5	D4	D3	D2	D1	D0
OFF	Surround Mode	0	0	0	0	0	0	0
Low					0	1	0	1
Middle					1	0	1	0
High					1	1	1	1
Prohibition					0	0	0	1
					0	0	1	0
					0	0	1	1
					0	1	0	0
					0	1	1	0
					0	1	1	1
					1	0	0	0
					1	0	0	1
					1	0	1	1
					1	1	0	0
					1	1	0	1
					1	1	1	0

About Surround Gain, the allotment of D3/D2/D1/D0 is discontinuous, please be careful.

Mode	MSB Surround Mode LSB							
	D7	D6	D5	D4	D3	D2	D1	D0
Mode OFF Surround SW (A)=ON	0	0	0	0	Surround Gain			
Mode ON Surround SW (B)=ON	1							

About Surround SW, please refer to Figure 22,25,28,30,32,36 (From P22 to P27).

: Initial condition

(6) About initial condition at supply voltage on

At on of supply voltage circuit made initialization inside IC is built-in. Please send data to all address as initial data at supply voltage on. And please supply mute at set side until this initial data is sent.

Item	Symbol	Limit			Unit	Condition
		Min.	Typ.	Max.		
Rise time of VCC	Trise	20	–	–	usec	VCC rise time from 0V to 3V
VCC voltage of release power on reset	Vpor	–	3.0	–	V	

© 2013 ROHM Co., Ltd. All rights reserved.

Downloaded from Arrow.com.

Volume Attenuation

ATT(dB)	D7	D6	D5	D4	D3	D2	D1	D0
0	1	0	0	0	0	0	0	0
-1	1	0	0	0	0	0	0	1
-2	1	0	0	0	0	0	1	0
-3	1	0	0	0	0	0	1	1
-4	1	0	0	0	0	1	0	0
-5	1	0	0	0	0	1	0	1
-6	1	0	0	0	0	1	1	0
-7	1	0	0	0	0	1	1	1
-8	1	0	0	0	1	0	0	0
-9	1	0	0	0	1	0	0	1
-10	1	0	0	0	1	0	1	0
-11	1	0	0	0	1	0	1	1
-12	1	0	0	0	1	1	0	0
-13	1	0	0	0	1	1	0	1
-14	1	0	0	0	1	1	1	0
-15	1	0	0	0	1	1	1	1
-16	1	0	0	1	0	0	0	0
-17	1	0	0	1	0	0	0	1
-18	1	0	0	1	0	0	1	0
-19	1	0	0	1	0	0	1	1
-20	1	0	0	1	0	1	0	0
-21	1	0	0	1	0	1	0	1
-22	1	0	0	1	0	1	1	0
-23	1	0	0	1	0	1	1	1
-24	1	0	0	1	1	0	0	0
-25	1	0	0	1	1	0	0	1
-26	1	0	0	1	1	0	1	0
-27	1	0	0	1	1	0	1	1
-28	1	0	0	1	1	1	0	0
-29	1	0	0	1	1	1	0	1
-30	1	0	0	1	1	1	1	0
-31	1	0	0	1	1	1	1	1
-32	1	0	1	0	0	0	0	0
-33	1	0	1	0	0	0	0	1
-34	1	0	1	0	0	0	1	0
-35	1	0	1	0	0	0	1	1
-36	1	0	1	0	0	1	0	0
-37	1	0	1	0	0	1	0	1
-38	1	0	1	0	0	1	1	0
-39	1	0	1	0	0	1	1	1
-40	1	0	1	0	1	0	0	0
-41	1	0	1	0	1	0	0	1
-42	1	0	1	0	1	0	1	0
-43	1	0	1	0	1	0	1	1
-44	1	0	1	0	1	1	0	0
-45	1	0	1	0	1	1	0	1

ATT(dB)	D7	D6	D5	D4	D3	D2	D1	D0
-46	1	0	1	0	1	1	1	0
-47	1	0	1	0	1	1	1	1
-48	1	0	1	1	0	0	0	0
-49	1	0	1	1	0	0	0	1
-50	1	0	1	1	0	0	1	0
-51	1	0	1	1	0	0	1	1
-52	1	0	1	1	0	1	0	0
-53	1	0	1	1	0	1	0	1
-54	1	0	1	1	0	1	1	0
-55	1	0	1	1	0	1	1	1
-56	1	0	1	1	1	0	0	0
-57	1	0	1	1	1	0	0	1
-58	1	0	1	1	1	0	1	0
-59	1	0	1	1	1	0	1	1
-60	1	0	1	1	1	1	0	0
-61	1	0	1	1	1	1	0	1
-62	1	0	1	1	1	1	1	0
-63	1	0	1	1	1	1	1	1
-64	1	1	0	0	0	0	0	0
-65	1	1	0	0	0	0	0	1
-66	1	1	0	0	0	0	1	0
-67	1	1	0	0	0	0	1	1
-68	1	1	0	0	0	1	0	0
-69	1	1	0	0	0	1	0	1
-70	1	1	0	0	0	1	1	0
-71	1	1	0	0	0	1	1	1
-72	1	1	0	0	1	0	0	0
-73	1	1	0	0	1	0	0	1
-74	1	1	0	0	1	0	1	0
-75	1	1	0	0	1	0	1	1
-76	1	1	0	0	1	1	0	0
-77	1	1	0	0	1	1	0	1
-78	1	1	0	0	1	1	1	0
-79	1	1	0	0	1	1	1	1
-80	1	1	0	1	0	0	0	0
-81	1	1	0	1	0	0	0	1
-82	1	1	0	1	0	0	1	0
-83	1	1	0	1	0	0	1	1
-84	1	1	0	1	0	1	0	0
-85	1	1	0	1	0	1	0	1
-86	1	1	0	1	0	1	1	0
-87	1	1	0	1	0	1	1	1
Prohibition	1	1	0	1	1	0	0	0
	▪	▪	▪	▪	▪	▪	▪	▪
	1	1	1	1	1	1	1	0
-∞	1	1	1	1	1	1	1	1

: Initial condition

© 2013 ROHM Co., Ltd. All rights reserved.

Downloaded from Arrow.com.

Application Circuit Diagram

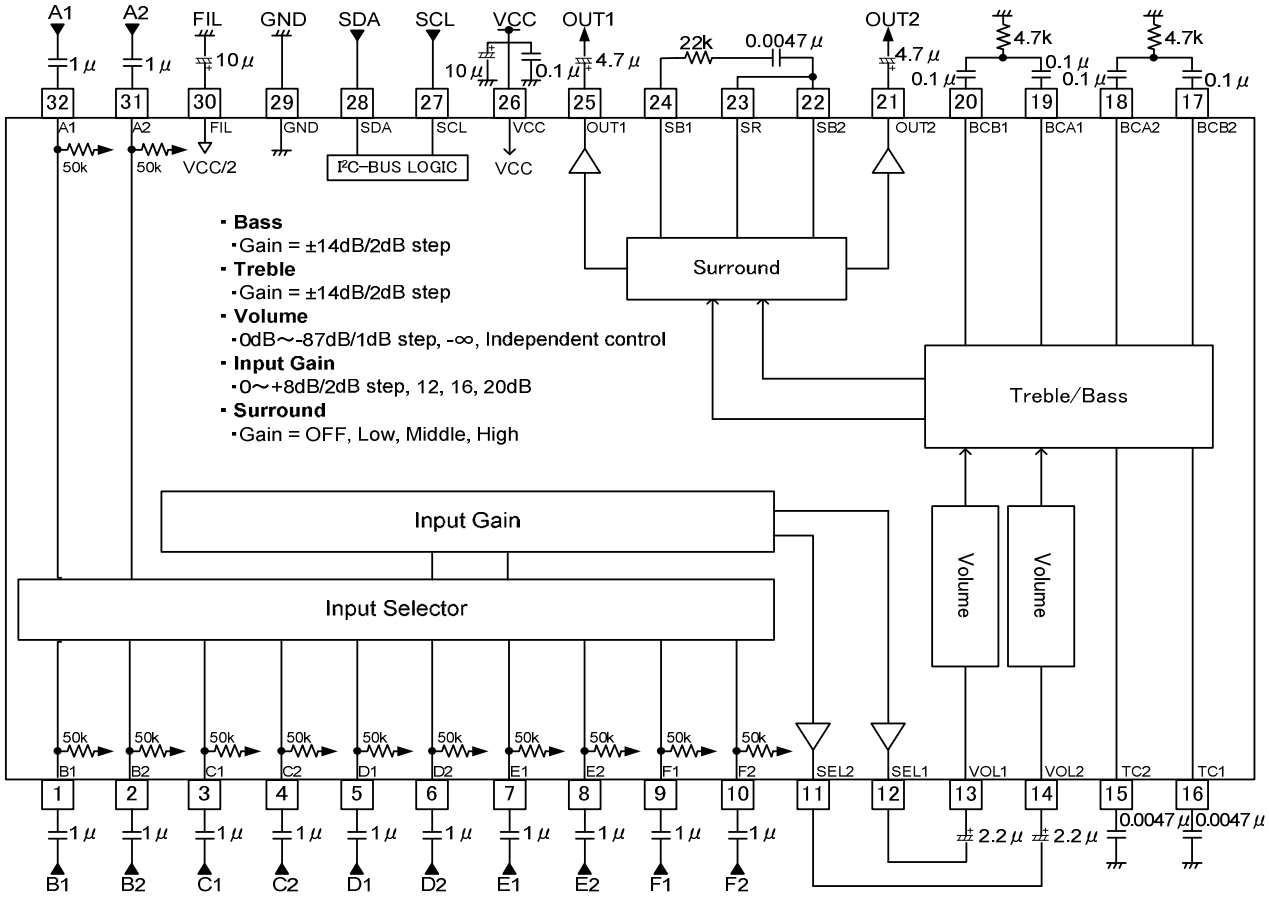

- **Bass**
  - Gain = ±14dB/2dB step
- **Treble**
  - Gain = ±14dB/2dB step
- **Volume**
  - 0dB～-87dB/1dB step, -∞, Independent control
- **Input Gain**
  - 0～+8dB/2dB step, 12, 16, 20dB
- **Surround**
  - Gain = OFF, Low, Middle, High

Figure 14. Application Circuit Diagram

UNIT
RESISTANCE: Ω
CAPACITANCE: F

Notes on Wiring

①Decoupling capacitor of the power supply has to be connected in the shortest distance possible.
②GND lines has to follow star-point connection.
③Wiring pattern of Digital signal should be away from that of analog unit. At the same time, crosstalk has to be minimized , if not eliminated.
④If possible, SCL and SDA lines of I^2C-BUS should not be parallel.
If it cannot be avoided, the lines must, at least, be shielded.
⑤Analog input lines should not be parallel, as well. If it cannot be avoided, the lines must, at least, be shielded.

© 2013 ROHM Co., Ltd. All rights reserved.

Downloaded from Arrow.com.

Thermal Derating Curve

The temperature, at which it is used, affects the electrical characteristics of an IC. Exceeding absolute maximum ratings may degrade and destroy elements. Careful consideration must be given to the heat of the IC from the two standpoints of immediate damage and long-term reliability of operation.

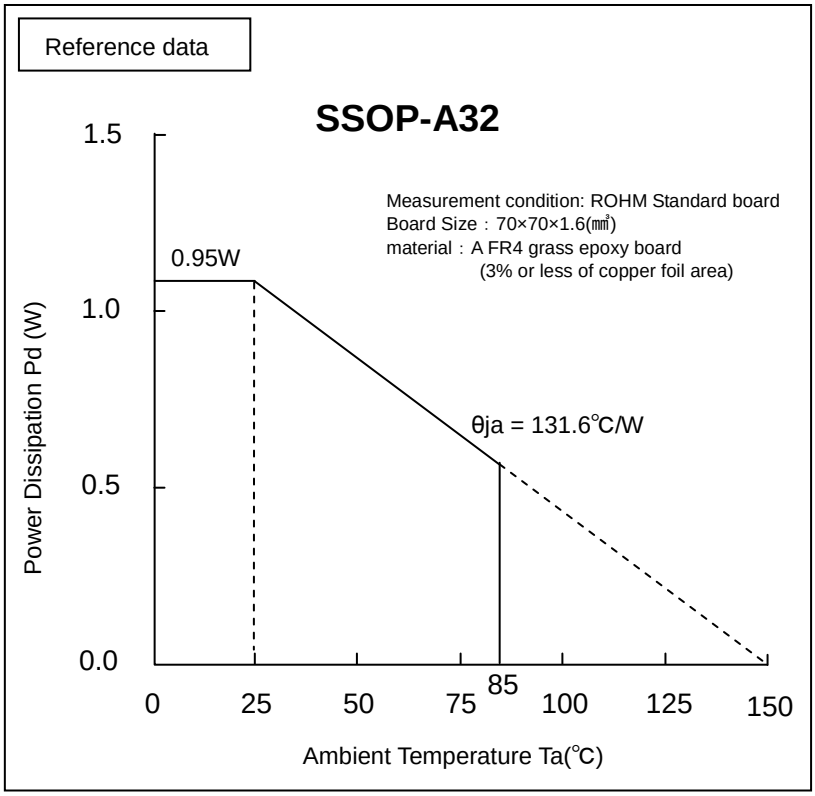

Figure 15. Temperature Derating Curve

Note: Values are actual measurements and are not guaranteed.

Power dissipation values vary according to the board on which the IC is mounted.

© 2013 ROHM Co., Ltd. All rights reserved.

Downloaded from Arrow.com.

Pin Equivalent Circuit and Description

Pin No.	Pin Name	Pin Voltage	Equivalent Circuit	Pin Description
32 31 1 2 3 4 5 6 7 8 9 10	A1 A2 B1 B2 C1 C2 D1 D2 E1 E2 F1 F2	4.5V	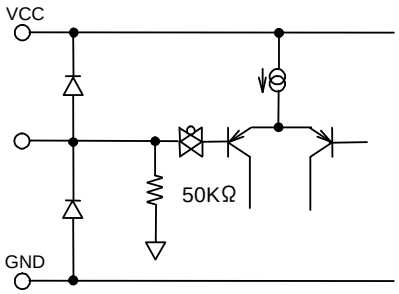	Stereo signal input pin Input impedance = 50kΩ(typ)
11 12 21 25	SEL2 SEL1 OUT2 OUT1	4.5V	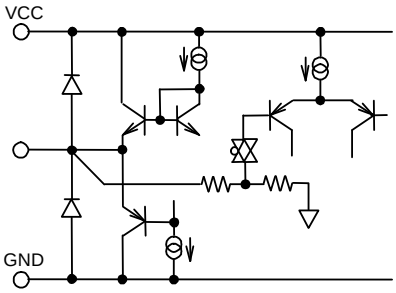	Output pin
13 14	VOL1 VOL2	4.5V	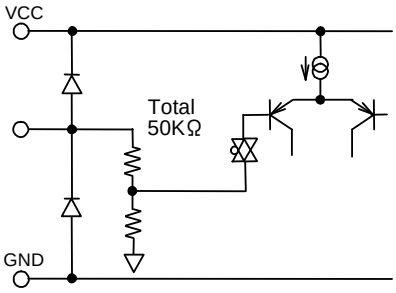	Volume input pin Input impedance = 50kΩ(typ)
15 16 17 20	TC2 TC1 BCB2 BCB1	4.5V	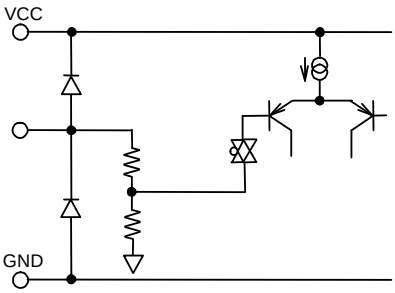	TC1,TC2 : Treble filter pin Refer to P21, Figure 20, Table 4 for the input impedance. BCB1,BCB2 : Bass filter pin Refer to P20, Figure 18, Table 3 for the input impedance
18 19	BCA2 BCA1	4.5V	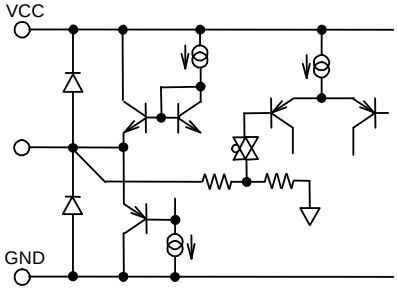	Bass filter pin
26	VCC	9.0V		Power supply pin.

The figure in the pin description, pin voltage and input/output equivalent circuit is reference value only. It does not guarantee the value.

© 2013 ROHM Co., Ltd. All rights reserved.

Downloaded from Arrow.com.

Pin No.	Pin name	Pin voltage	Equivalent Circuit	Pin Description
22 24	SB2 SB1	4.5V	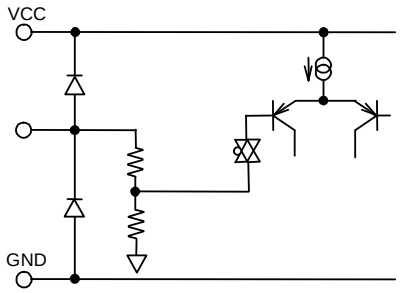	Bass boost pin. Refer to P22, Figure 22, Table 5 for the input impedance.
23	SR	4.5V	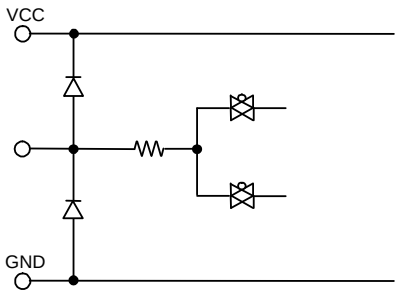	Surround pin Refer to P22, Figure 22, Table 5 for the input impedance.
27	SCL	–	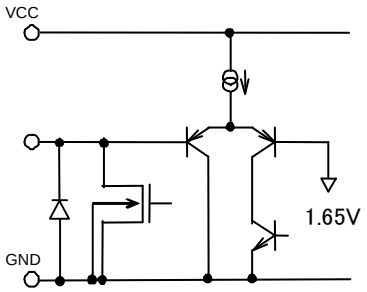	Clock input pin of I^2C-BUS communication.
28	SDA	–	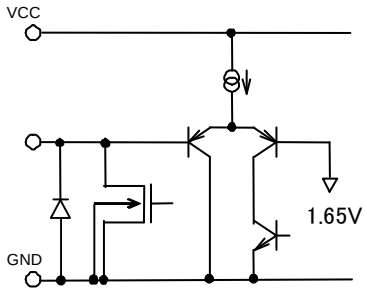	Data input pin of I^2C-BUS communication.
29	GND	0V		Analog ground pin.
30	FIL	4.5V	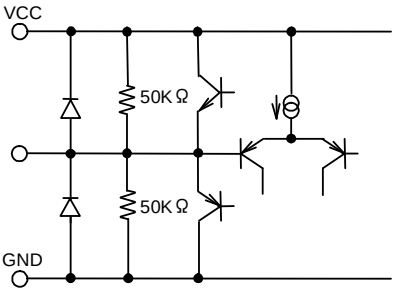	1/2 VCC pin. Reference voltage of analog signal system. The simple pre-charge circuit and simple discharge circuit for an external capacitor are built-in.

The figure in the pin description, pin voltage and input/output equivalent circuit is reference value only. It does not guarantee the value.

© 2013 ROHM Co., Ltd. All rights reserved.

Downloaded from Arrow.com.

Cautions on use

1. Absolute Maximum Voltage Rating

When the voltage supplied to VCC is more than the absolute maximum voltage rating, circuit current increases rapidly. This will lead to characteristic deterioration and destruction of the device. Especially in a surge test of the set, when surge application is expected at VCC terminal (26pin), absolute maximum voltage rating must not be exceeded (including a operating voltage + serge ingredient (around 14V)).

2. Input Signal

a) About constant set up of input coupling capacitor

In the signal input terminal, the constant setting of input coupling capacitor C(F) be sufficient input impedance $R_{IN}(\Omega)$ inside IC and please decide. The 1st order HPF characteristic of RC is composed.

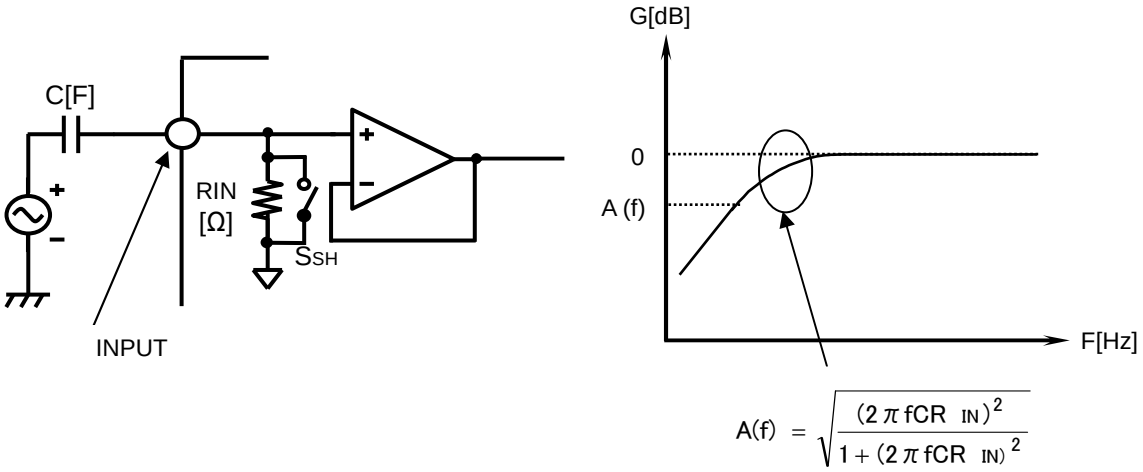

Figure 16. Input Short Circuit

b) Input Selector SHORT

SHORT mode is the command which makes input impedance of all terminals in input selector small by setting switch S_{SH} is ON. Switch S_{SH} is OFF, when SHORT command is disabled.
The charge time of an external coupling capacitor becomes short during the command.
It is recommended to use SHORT mode when there is no signal.

3. Output Load Characteristics

The usages of load for output are below (reference). Please use the load more than 10kΩ(TYP)

Pin No.	Pin Name	Pin No.	Pin Name
11	SEL2	21	OUT2
12	SEL1	25	OUT1

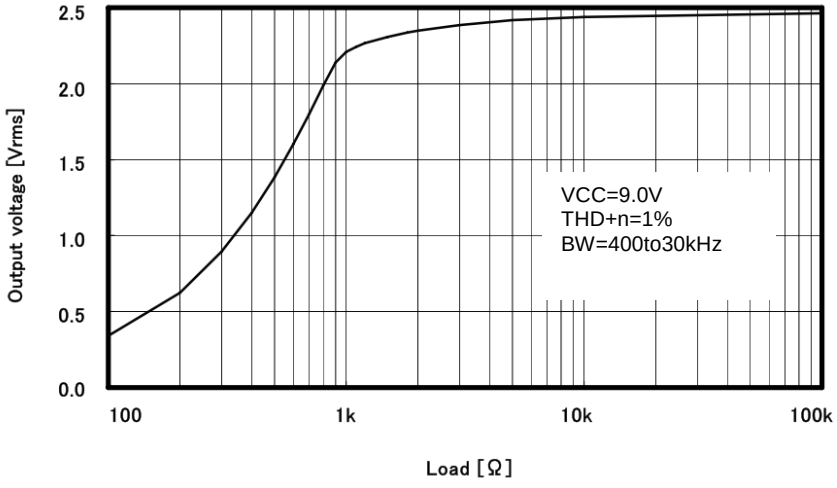

Figure 17. Output Load Characteristic (Reference Vcc=9.0V)

© 2013 ROHM Co., Ltd. All rights reserved.

Downloaded from Arrow.com.

4. Sound Input Terminal

If this terminal is open, the input resistance is 50kΩ which may induce pop noise from the outside. If a sound input terminal is not used, it has to be connected to GND using a capacitor or set up the input selector using a microcomputer so that the unused input terminal will not be selected.

5. Bass Filter Constant Set Up

Bass Boost

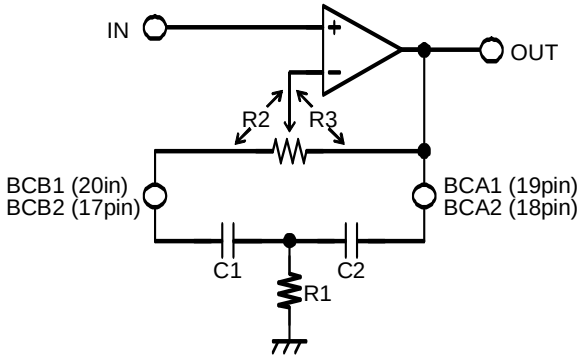

Bass Cut

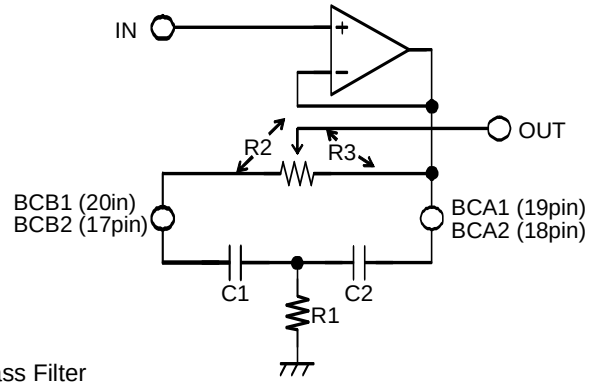

Figure 18. Bass Filter

$$fo = \frac{1}{2\pi\sqrt{R1(R2+R3)\cdot C1\cdot C2}}[Hz]$$

$$Q = \frac{\sqrt{R1(R2+R3)\cdot C1\cdot C2}}{R1(C1+C2)+R2C1}$$

$$\text{BOOST GAIN} = 20\log\frac{\frac{R2+R3}{R1}+\frac{C2}{C1}+1}{\frac{R2}{R1}+\frac{C2}{C1}+1}[dB]$$

$$\text{CUT GAIN} = 20\log\frac{\frac{R2}{R1}+\frac{C2}{C1}+1}{\frac{R2+R3}{R1}+\frac{C2}{C1}+1}[dB]$$

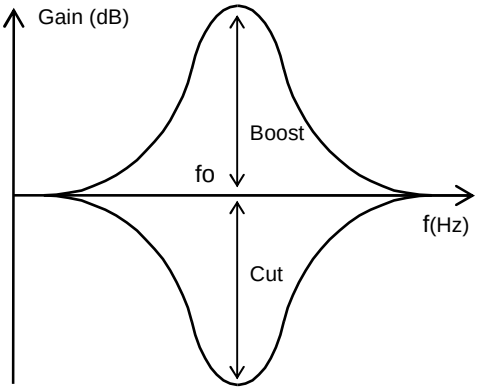

Figure 19. Bass Frequency Characteristics

Table 3.
Standard value of R2 and R3

Bass Boost/Cut Gain	Resistance(kΩ) ※TYP.	
	R2	R3
±0dB	53.5	0
±2dB	40.9	12.6
±4dB	30.5	23.0
±6dB	22.3	31.2
±8dB	15.8	37.7
±10dB	10.6	42.9
±12dB	6.5	47.0
±14dB	3.2	50.3

Actual boost/cut value may vary slightly .

© 2013 ROHM Co., Ltd. All rights reserved.

Downloaded from Arrow.com.

6. Treble Filter Constant Set Up

Treble Boost

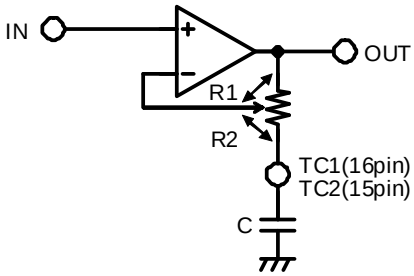

Treble Cut

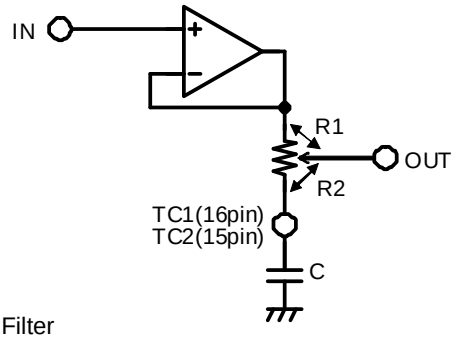

Figure 20. Treble Filter

$$fc = \frac{1}{2\pi R2 \cdot C}[Hz]$$

$$BOOST\ GAIN = 20\log\frac{R1+R2+ZC}{R2+ZC}[dB]$$

$$CUT\ GAIN = 20\log\frac{R2+ZC}{R1+R2+ZC}[dB]$$

$$ZC = \frac{1}{j\omega C}[\Omega]$$

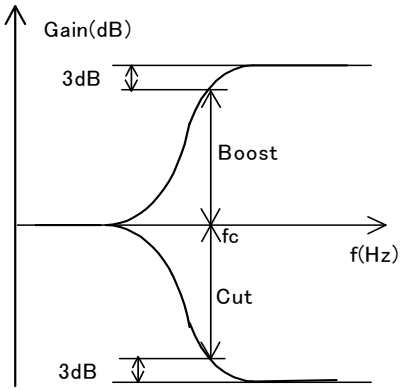

Figure 21. Treble Frequency Characteristics

Table 4.
Standard value of R1 and R2(reference)

Treble Boost/Cut Gain	Resistance(kΩ) ※TYP.	
	R1	R2
±0dB	0	29.1
±2dB	6.1	23.0
±4dB	10.9	18.2
±6dB	14.8	14.3
±8dB	17.9	11.2
±10dB	20.5	8.6
±12dB	22.6	6.5
±14dB	24.4	4.7

Actual boost/cut value may vary slightly

© 2013 ROHM Co., Ltd. All rights reserved.

Downloaded from Arrow.com.

7. BassBoost Application

7-1. BassBoost Application Circuit

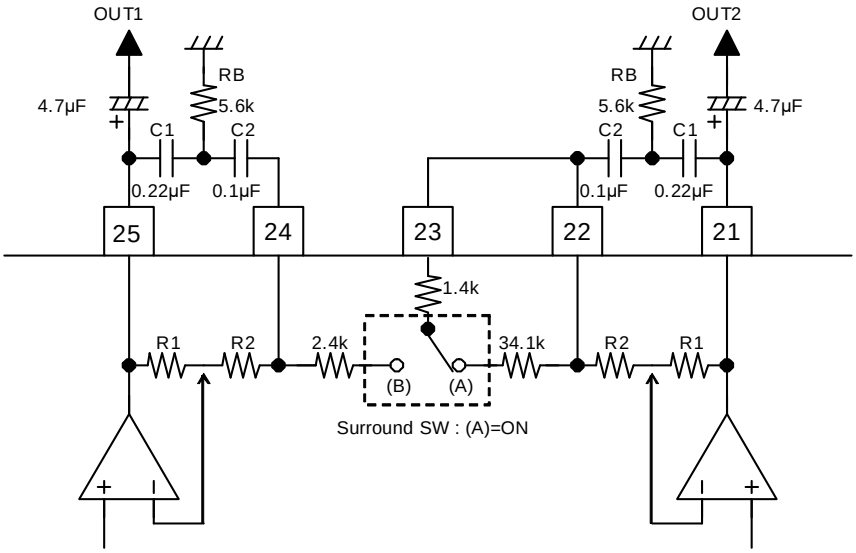

Figure 22. Example of a BassBoost Application Circuit

Table 5.
Standard value of R1 and R2

Surround Gain	R1[kΩ]	R2[kΩ]
OFF	0	84.5
Low	44.8	39.7
Middle	70.0	14.5
High	84.2	0.3

7-2. The computation formula and the BassBoost Gain Characteristic Curve (fo=50Hz, Q=1.8(Surround Gain=High))

$$Gain = 20\log \frac{\frac{R1+R2}{RB}+\frac{C1}{C2}+1}{\frac{R2}{RB}+\frac{C1}{C2}+1}[dB]$$

$$fo = \frac{1}{2\pi\sqrt{RB(R1+R2)\cdot C1\cdot C2}}[Hz]$$

$$Q = \frac{\sqrt{RB(R1+R2)\cdot C1\cdot C2}}{RB(C1+C2)+R2\cdot C2}$$

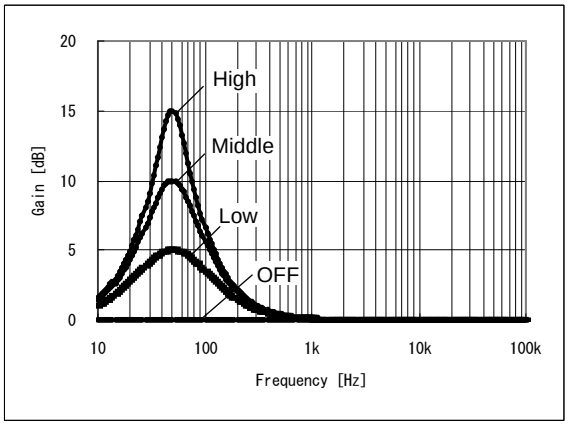

Figure 23. BassBoost Gain Characteristic Curve

7-3. The Characteristic Curve in fixed number change

Table 6. The fixed number example (*1)

No.	The specification	C1 [μF]	C2 [μF]	RB [kΩ]
①	fo=60Hz,Q=1.8,Gain=16.8dB	0.15	0.1	5.6
②	fo=72Hz,Q=1.7,Gain=15.0dB	0.15	0.068	5.6
③	fo=79Hz,Q=1.9,Gain=16.2dB	0.15	0.068	4.7
④	fo=89Hz,Q=1.8,Gain=16.9dB	0.1	0.068	5.6

(*1): Surround Gain=High

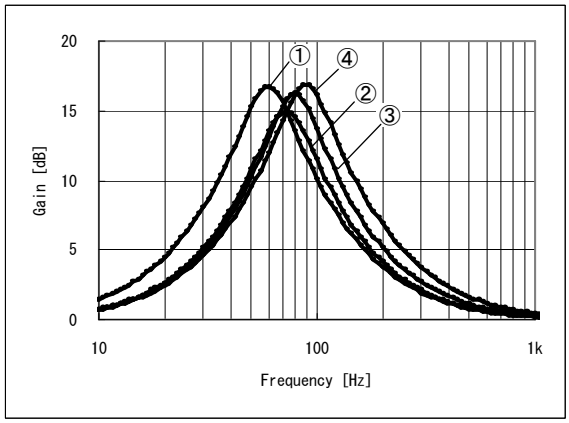

Figure 24. BassBoost Gain Characteristic Curve in fixed number change

© 2013 ROHM Co., Ltd. All rights reserved.

Downloaded from Arrow.com.

8. BassBoost & Surround Application

8-1. BassBoost & Surround Application Circuit

In this application circuit example, it isn't possible to do the use only of Surround. Also, Surround Gain depends on the setting value of BassBoost Gain.

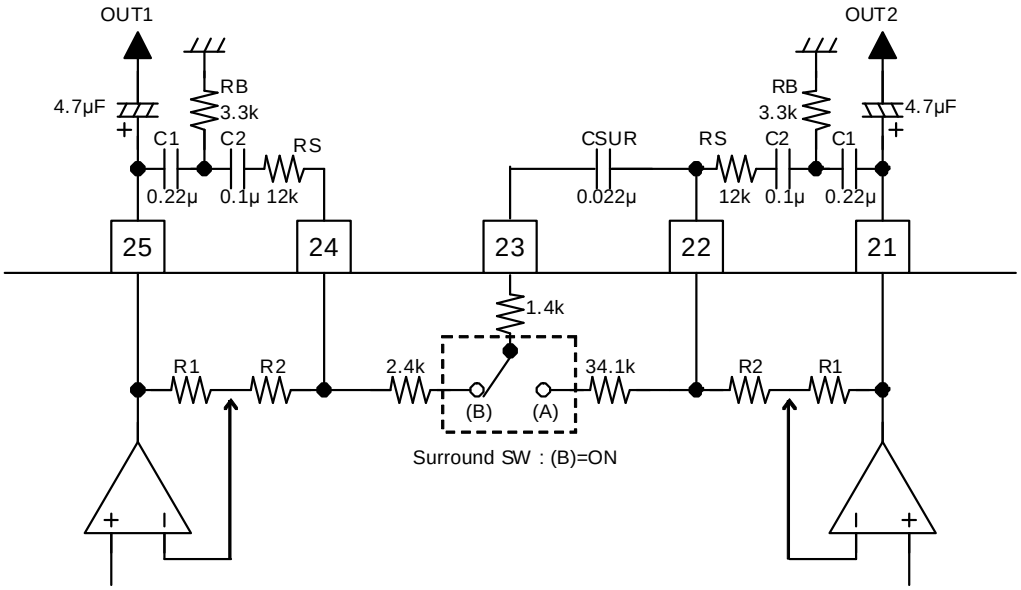

Refer to Table 5 for R1 and R2 standard values.

Figure 25. Example of BassBoost & Surround Application Circuit

8-2. BassBoost & Surround Characteristic Curve and the computation formula of BassBoost Gain(Surround SW : (A)=ON)

$$Gain = 20\log \frac{\frac{R1+R2+RS}{RB}+\frac{C1}{C2}+1}{\frac{R2+RS}{RB}+\frac{C1}{C2}+1}\ [dB]$$

$$fo = \frac{1}{2\pi\sqrt{RB(R1+R2+RS)\cdot C1\cdot C2}}\ [Hz]$$

$$Q = \frac{\sqrt{RB(R1+R2+RS)\cdot C1\cdot C2}}{RB(C1+C2)+C2(R2+RS)}$$

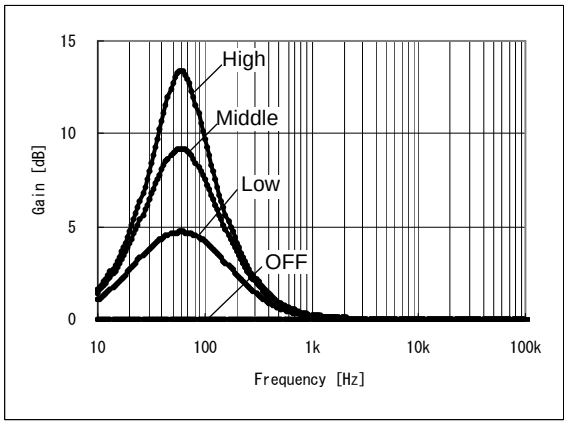

Figure 26. BassBoost & Surround Characteristic Curve(Surround SW : (A)=ON)

8-3. BassBoost & Surround Characteristic Curve(Surround SW : (B)=ON)

In this application circuit example, it isn't possible to do the use only of Surround. Also, Surround Gain depends on the setting value of BassBoost Gain.

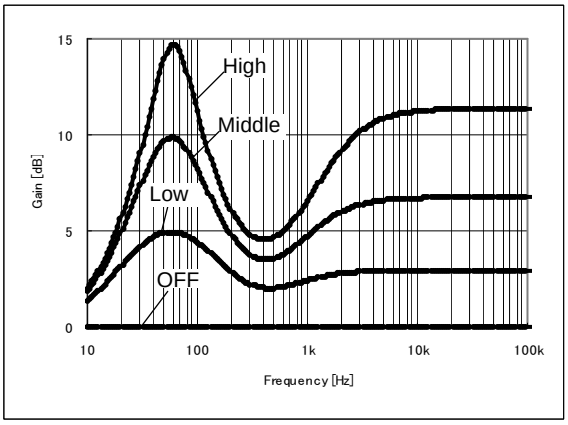

Figure 27. BassBoost & Surround Characteristic Curve(Surround SW : (B)=ON)

© 2013 ROHM Co., Ltd. All rights reserved.

Downloaded from Arrow.com.

9.Easy Surround Application

9. Easy Surround Application Circuit

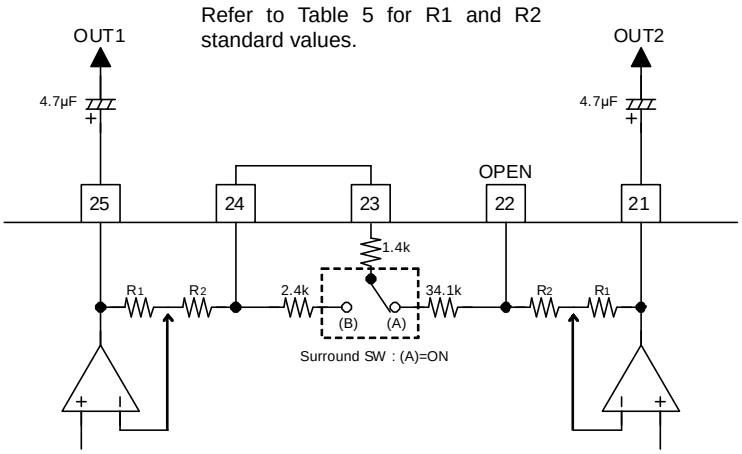

Figure 28. Example of Easy Surround Application Circuit

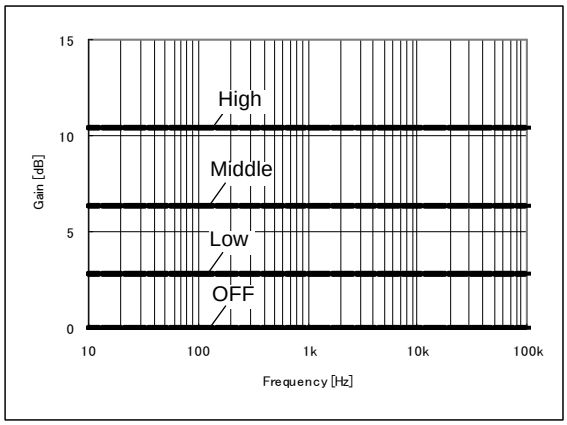

Figure 29. Easy Surround Characteristic Curve

10. Surround Application

10-1. Surround Application Circuit

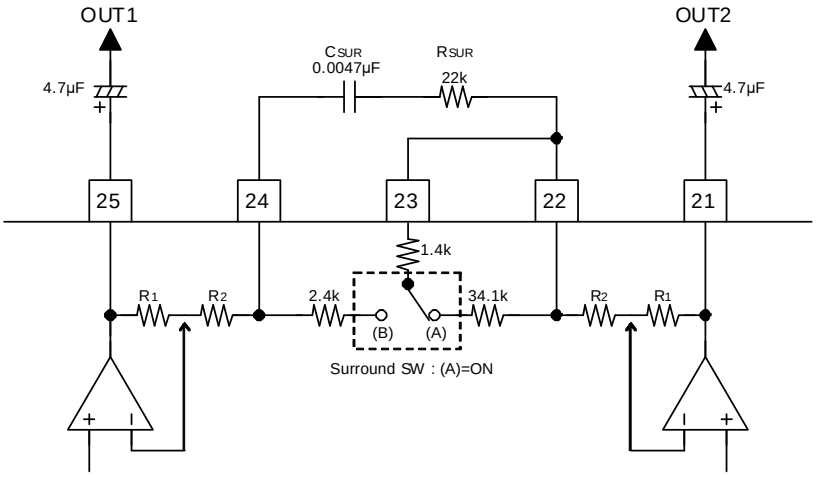

Refer to Table 5 for R1 and R2 standard values.

Figure 30. Example of Surround Application Circuit

10-2. Surround Characteristic Curve

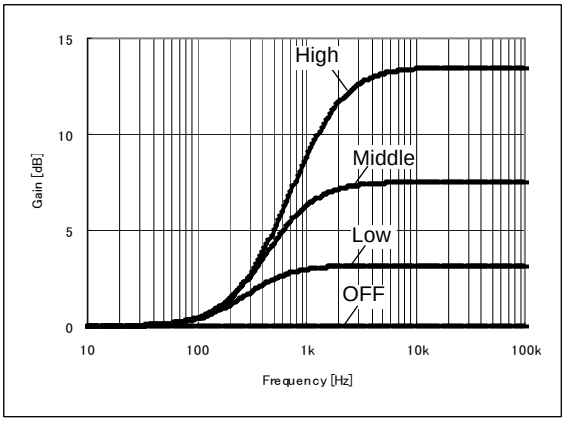

Figure 31. Surround Characteristic Curve

© 2013 ROHM Co., Ltd. All rights reserved.

Downloaded from Arrow.com.

11. Output Gain Application

11-1. Output Gain Application Circuit

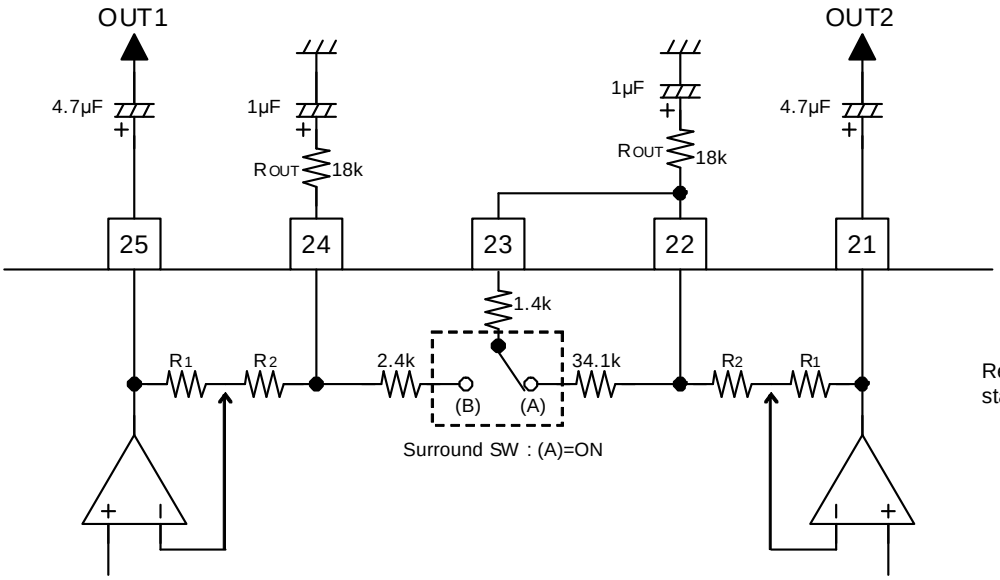

Refer to Table 5 for R1 and R2 standard values.

Figure 32. Example of Output Gain Application Circuit

11-2. The computation formula and the Output Gain Characteristic Curve

$$Gain = 20\log\frac{R1+R2+ROUT}{R2+ROUT}[dB]$$

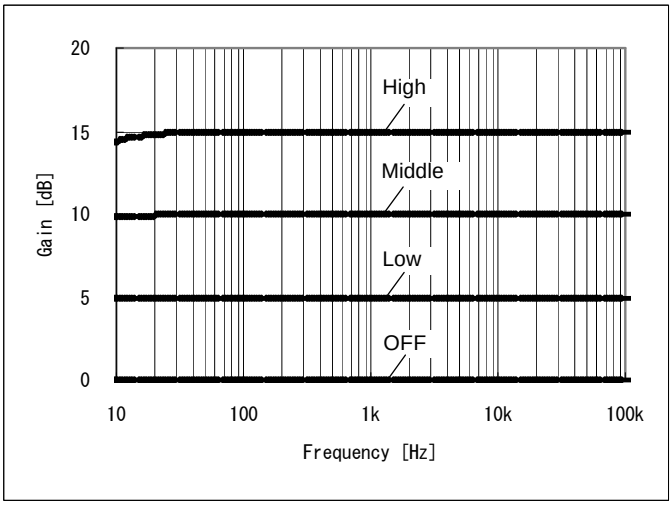

Figure 33. Output Gain Characteristic Curve

© 2013 ROHM Co., Ltd. All rights reserved.

Downloaded from Arrow.com.

12. Easy 3 Band Application

12-1. Easy 3 Band Application Circuit

- Easy 3 band is formed using BassBoost, Bass and Treble.
- Use BassBoost for Bass band, Bass for Middle band and Treble for Treble band.
- The Middle band and Treble band Gain ranges from -14dB to 14dB with 2dB step while Bass band have four Gain settings (OFF/Low/Middle/High).
- At the addition function unused time, it is Surround Gain=OFF, Surround SW : Use in (A)=ON.
- Surround SW : Be careful because it damages output (25pin, 21pin) short-circuiting next, a characteristic when having made (B)=ON.

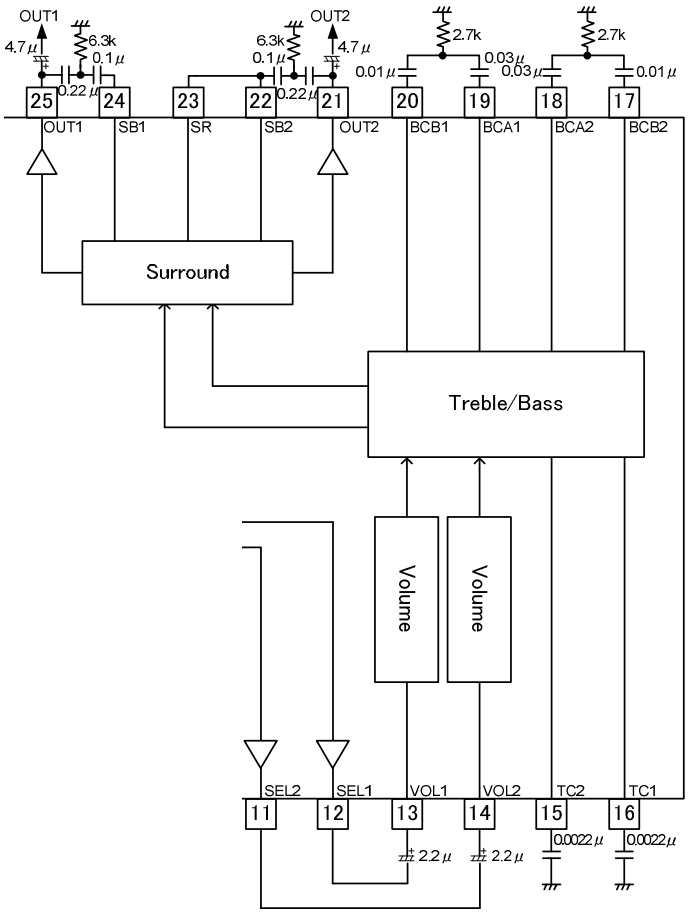

Figure 34. Example of Easy 3 band Application Circuit

6-2. Easy 3 Band Characteristic Curve

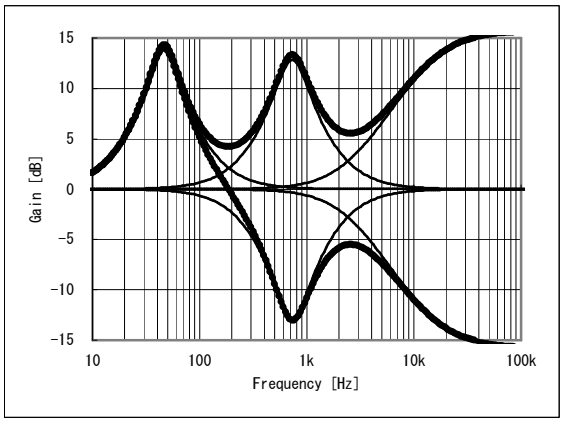

Figure 35. Easy 3 Band Characteristic Curve

© 2013 ROHM Co., Ltd. All rights reserved.

Downloaded from Arrow.com.

13. Application Circuit example when added function is not used

・When the added function is unused, Surround Gain=OFF, Surround SW : (A)=ON.
・Surround SW : Caution must be taken when set to (B)=ON. In this condition, the outputs are shorted(25pin, 21pin) and will degrade the electrical characteristics of the chip.

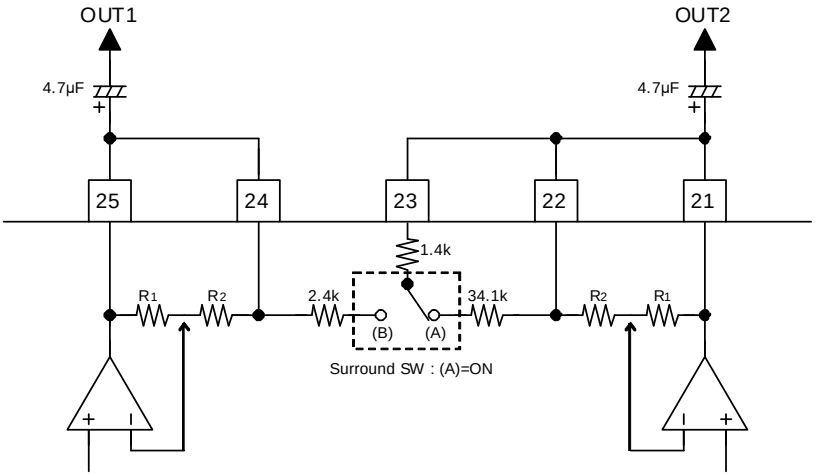

Refer to Table 5 for R1 and R2 standard values.

Figure 36. Example of addition function unused time Application Circuit

14. INPUT SHORT Function Application Circuit

・The INPUT SHORT function makes input impedance RIN small in the switch control and causes fast charging in the external coupling capacitance.
・The input terminal DC bias voltage can be changed to its regular condition (1/2VCC) by enabling this function (I^2C-BUS setting : Select Address=04(hex),Data=05(hex)) immediately after start-up.
・INPUT SHORT function has to be used whenever there is no input at the input terminals.

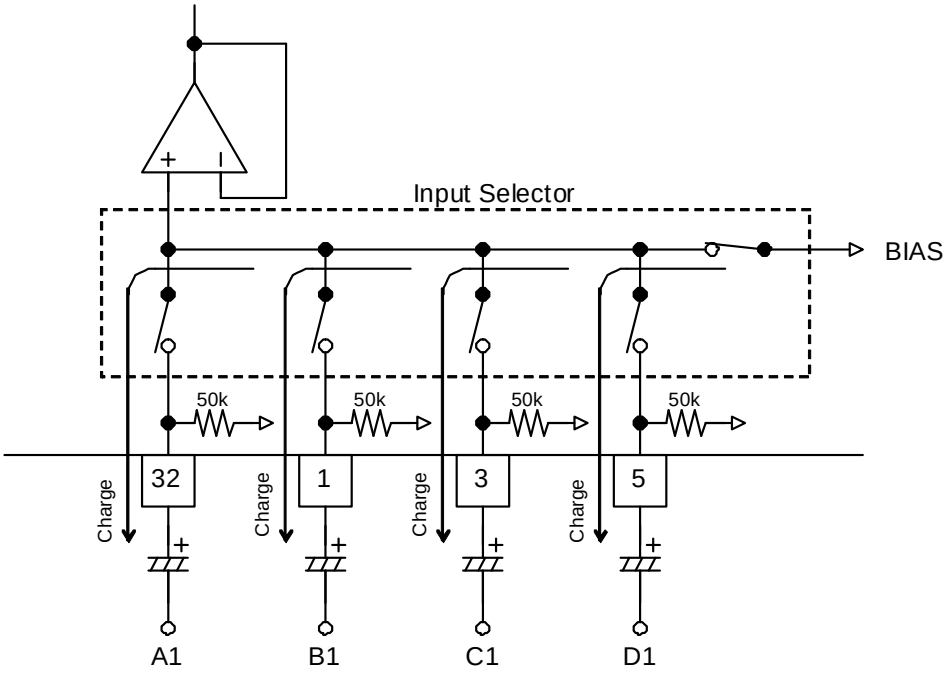

Figure 37. INPUT SHORT mode in Ch1

© 2013 ROHM Co., Ltd. All rights reserved.

Downloaded from Arrow.com.

15. Microphone Input Application

・Outside sound signal can be added to VOL1(13pin) and VOL2(14pin) since its input impedance is constant (50kΩ). Even if the volume attenuation setting changes, it can still be used as the microphone input terminal.
・Due to the added resistor at VOL1 and VOL2 terminal, the signal level of this terminals (VOL1, VOL2) is determined by its resistance value and acts as signal level VOLUME.

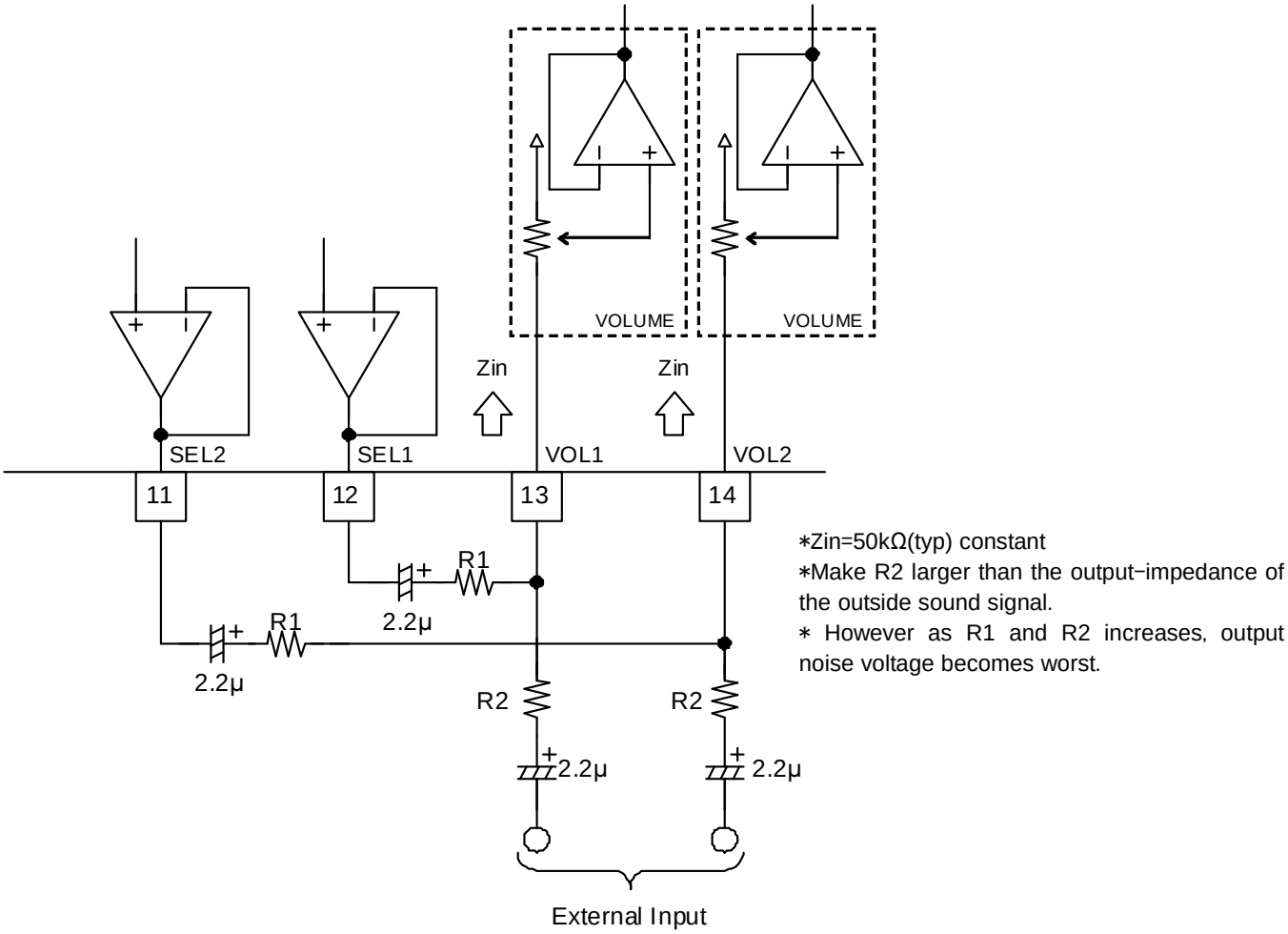

Figure 38. Example of microphone input Application Circuit

© 2013 ROHM Co., Ltd. All rights reserved.

Downloaded from Arrow.com.

Ordering Information

B D 3 4 9 1 F S	E 2
Part Number	Package FS: SSOP-A32
	Packaging and forming specification E2: Embossed tape and reel (SSOP-A32)

Physical Dimension: Tape and Reel Information

SSOP-A32

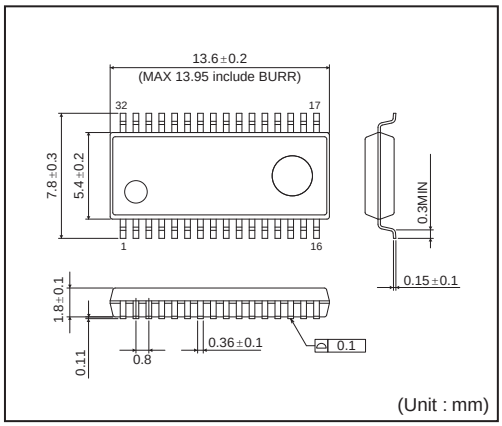

<Tape and Reel information>

Tape	Embossed carrier tape
Quantity	2000pcs
Direction of feed	E2 (The direction is the 1pin of product is at the upper left when you hold reel on the left hand and you pull out the tape on the right hand)

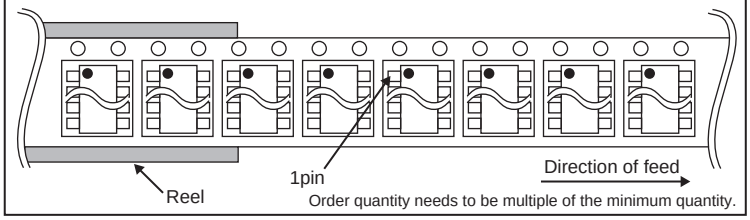

Order quantity needs to be multiple of the minimum quantity.

Marking Diagram(TOP VIEW)

SSOP-A32(TOP VIEW)

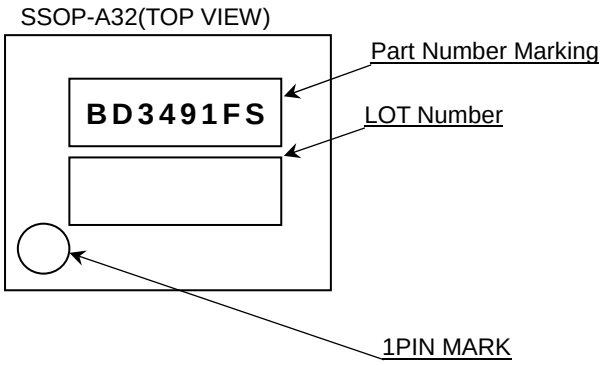

© 2013 ROHM Co., Ltd. All rights reserved.

Downloaded from Arrow.com.

Revision history

Date	Revision	Changes
08.FEB.2013	001	New Release

Date	Revision	Changes
5.Dec.2013	002	All page, format update
5.Dec.2013	002	Minor correction

Date	Revision	Changes
28.FEB.2014	003	Correct figure, Application Circuit Diagram, Pin Configuration , Block Diagram.
28.FEB.2014	003	Correct CONTROL SIGNAL SPECIFICATION, Slave address, initial condition.
28.FEB.2014	003	Correct Thermal resistance and Power Dissipation.
28.FEB.2014	003	Minor correction

Date	Revision	Changes
1.APR.2014	004	Comment about Prohibition in I^2C-data add.
1.APR.2014	004	Minor correction

© 2013 ROHM Co., Ltd. All rights reserved.

Downloaded from Arrow.com.

Notice

Precaution on using ROHM Products

1. Our Products are designed and manufactured for application in ordinary electronic equipments (such as AV equipment, OA equipment, telecommunication equipment, home electronic appliances, amusement equipment, etc.). If you intend to use our Products in devices requiring extremely high reliability (such as medical equipment (Note 1), transport equipment, traffic equipment, aircraft/spacecraft, nuclear power controllers, fuel controllers, car equipment including car accessories, safety devices, etc.) and whose malfunction or failure may cause loss of human life, bodily injury or serious damage to property ("Specific Applications"), please consult with the ROHM sales representative in advance. Unless otherwise agreed in writing by ROHM in advance, ROHM shall not be in any way responsible or liable for any damages, expenses or losses incurred by you or third parties arising from the use of any ROHM's Products for Specific Applications.

(Note1) Medical Equipment Classification of the Specific Applications

JAPAN	USA	EU	CHINA
CLASSⅢ	CLASSⅢ	CLASSⅡb	CLASSⅢ
CLASSⅣ		CLASSⅢ	

2. ROHM designs and manufactures its Products subject to strict quality control system. However, semiconductor products can fail or malfunction at a certain rate. Please be sure to implement, at your own responsibilities, adequate safety measures including but not limited to fail-safe design against the physical injury, damage to any property, which a failure or malfunction of our Products may cause. The following are examples of safety measures:
   [a] Installation of protection circuits or other protective devices to improve system safety
   [b] Installation of redundant circuits to reduce the impact of single or multiple circuit failure

3. Our Products are designed and manufactured for use under standard conditions and not under any special or extraordinary environments or conditions, as exemplified below. Accordingly, ROHM shall not be in any way responsible or liable for any damages, expenses or losses arising from the use of any ROHM's Products under any special or extraordinary environments or conditions. If you intend to use our Products under any special or extraordinary environments or conditions (as exemplified below), your independent verification and confirmation of product performance, reliability, etc, prior to use, must be necessary:
   [a] Use of our Products in any types of liquid, including water, oils, chemicals, and organic solvents
   [b] Use of our Products outdoors or in places where the Products are exposed to direct sunlight or dust
   [c] Use of our Products in places where the Products are exposed to sea wind or corrosive gases, including Cl_2, H_2S, NH_3, SO_2, and NO_2
   [d] Use of our Products in places where the Products are exposed to static electricity or electromagnetic waves
   [e] Use of our Products in proximity to heat-producing components, plastic cords, or other flammable items
   [f] Sealing or coating our Products with resin or other coating materials
   [g] Use of our Products without cleaning residue of flux (even if you use no-clean type fluxes, cleaning residue of flux is recommended); or Washing our Products by using water or water-soluble cleaning agents for cleaning residue after soldering
   [h] Use of the Products in places subject to dew condensation

4. The Products are not subject to radiation-proof design.

5. Please verify and confirm characteristics of the final or mounted products in using the Products.

6. In particular, if a transient load (a large amount of load applied in a short period of time, such as pulse. is applied, confirmation of performance characteristics after on-board mounting is strongly recommended. Avoid applying power exceeding normal rated power; exceeding the power rating under steady-state loading condition may negatively affect product performance and reliability.

7. De-rate Power Dissipation (Pd) depending on Ambient temperature (Ta). When used in sealed area, confirm the actual ambient temperature.

8. Confirm that operation temperature is within the specified range described in the product specification.

9. ROHM shall not be in any way responsible or liable for failure induced under deviant condition from what is defined in this document.

Precaution for Mounting / Circuit board design

1. When a highly active halogenous (chlorine, bromine, etc.) flux is used, the residue of flux may negatively affect product performance and reliability.

2. In principle, the reflow soldering method must be used; if flow soldering method is preferred, please consult with the ROHM representative in advance.

For details, please refer to ROHM Mounting specification

© 2013 ROHM Co., Ltd. All rights reserved.

Downloaded from Arrow.com.

Precautions Regarding Application Examples and External Circuits

1. If change is made to the constant of an external circuit, please allow a sufficient margin considering variations of the characteristics of the Products and external components, including transient characteristics, as well as static characteristics.

2. You agree that application notes, reference designs, and associated data and information contained in this document are presented only as guidance for Products use. Therefore, in case you use such information, you are solely responsible for it and you must exercise your own independent verification and judgment in the use of such information contained in this document. ROHM shall not be in any way responsible or liable for any damages, expenses or losses incurred by you or third parties arising from the use of such information.

Precaution for Electrostatic

This Product is electrostatic sensitive product, which may be damaged due to electrostatic discharge. Please take proper caution in your manufacturing process and storage so that voltage exceeding the Products maximum rating will not be applied to Products. Please take special care under dry condition (e.g. Grounding of human body / equipment / solder iron, isolation from charged objects, setting of Ionizer, friction prevention and temperature / humidity control).

Precaution for Storage / Transportation

1. Product performance and soldered connections may deteriorate if the Products are stored in the places where:
   - [a] the Products are exposed to sea winds or corrosive gases, including Cl2, H2S, NH3, SO2, and NO2
   - [b] the temperature or humidity exceeds those recommended by ROHM
   - [c] the Products are exposed to direct sunshine or condensation
   - [d] the Products are exposed to high Electrostatic

2. Even under ROHM recommended storage condition, solderability of products out of recommended storage time period may be degraded. It is strongly recommended to confirm solderability before using Products of which storage time is exceeding the recommended storage time period.

3. Store / transport cartons in the correct direction, which is indicated on a carton with a symbol. Otherwise bent leads may occur due to excessive stress applied when dropping of a carton.

4. Use Products within the specified time after opening a humidity barrier bag. Baking is required before using Products of which storage time is exceeding the recommended storage time period.

Precaution for Product Label

QR code printed on ROHM Products label is for ROHM's internal use only.

Precaution for Disposition

When disposing Products please dispose them properly using an authorized industry waste company.

Precaution for Foreign Exchange and Foreign Trade act

Since our Products might fall under controlled goods prescribed by the applicable foreign exchange and foreign trade act, please consult with ROHM representative in case of export.

Precaution Regarding Intellectual Property Rights

1. All information and data including but not limited to application example contained in this document is for reference only. ROHM does not warrant that foregoing information or data will not infringe any intellectual property rights or any other rights of any third party regarding such information or data. ROHM shall not be in any way responsible or liable for infringement of any intellectual property rights or other damages arising from use of such information or data.:

2. No license, expressly or implied, is granted hereby under any intellectual property rights or other rights of ROHM or any third parties with respect to the information contained in this document.

Other Precaution

1. This document may not be reprinted or reproduced, in whole or in part, without prior written consent of ROHM.

2. The Products may not be disassembled, converted, modified, reproduced or otherwise changed without prior written consent of ROHM.

3. In no event shall you use in any way whatsoever the Products and the related technical information contained in the Products or this document for any military purposes, including but not limited to, the development of mass-destruction weapons.

4. The proper names of companies or products described in this document are trademarks or registered trademarks of ROHM, its affiliated companies or third parties.

© 2013 ROHM Co., Ltd. All rights reserved.

Downloaded from Arrow.com.

General Precaution

1. Before you use our Products, you are requested to carefully read this document and fully understand its contents. ROHM shall not be in any way responsible or liable for failure, malfunction or accident arising from the use of any ROHM's Products against warning, caution or note contained in this document.

2. All information contained in this document is current as of the issuing date and subject to change without any prior notice. Before purchasing or using ROHM's Products, please confirm the latest information with a ROHM sales representative.

3. The information contained in this document is provided on an "as is" basis and ROHM does not warrant that all information contained in this document is accurate and/or error-free. ROHM shall not be in any way responsible or liable for any damages, expenses or losses incurred by you or third parties resulting from inaccuracy or errors of or concerning such information.

© 2014 ROHM Co., Ltd. All rights reserved.

Downloaded from Arrow.com.