# EVALUATION BOARD MANUAL

WKM320AA1-EVB

# EVALIATION KIT MANUAL

WKM320AA1-EVK

For WKM320AA1 Wireless LAN Module

**To operate this evaluation board, need to sign a Software License Agreement with NXP Semiconductors and obtain SDK (Software Development Kit).**

**This evaluation board is an object for experiment of operation, and does not guarantee quality.**
**Also, the schematics, parts and software used in the evaluation board may not be the latest.**


Copyright 2023 KAGA FEI Co., Ltd.

Downloaded from Arrow.com.

***ATTENTION: Software related to this module may be under Japan export control. Depending on the customer's country and application (e.g. weapons), KAGA FEI may not be able to provide the software to all customers. Please contact your local KAGA FEI sales office for additional information.***

***To contact your local sales office and for additional product information, please visit www.kagafei.com/jp/eng/***


Copyright 2023 KAGA FEI Co., Ltd.

Downloaded from Arrow.com.

# Contents

1. Introduction ..... 4
2. Target Module ..... 4
3. Accessories ..... 4
4. Recommended Operating Environment ..... 5
5. Block Diagram ..... 5
6. Evaluation Board Layout ..... 5
7. Pin Description of Evaluation Board ..... 6
8. Software ..... 9
9. Example of Connection for Evaluation ..... 10
10. Schematic of Evaluation Board ..... 12
11. Antenna characteristics example ..... 13

## Rev. History

30-Aug. 2023> Rev.1.0 Initial Release


Copyright 2023 KAGA FEI Co., Ltd.

Downloaded from Arrow.com.

# 1. Introduction

The evaluation board is designed for customers to easily work with “WKM320AA1”, ***MCU embedded Wireless LAN*** module, for functional evaluation purpose. This document describes the hardware configuration and the usage.

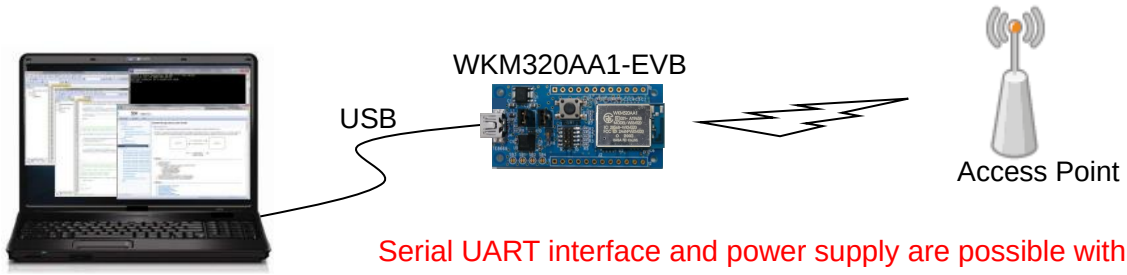


Serial UART interface and power supply are possible with one USB cable. And this board has the SWD connector terminal for software development.

# 2. Target Module

WKM320AA1

# 3. Accessories

| | | |
|---|---|---|
| 1 | Evaluation Board (WKM320AA1-EVB) | 1 piece |
| 2 | J-Link Lite (WKM320AA1-EVK Only) + USB cable for Evaluation Board | 1 set |

1. WKM320AA1-EVB

2. WKM320AA1-EVK

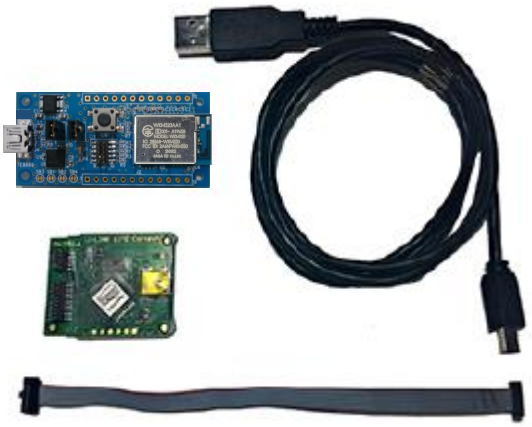

J-Link Lite is only delivered and supported as part of an evaluation kit, which includes an evaluation board. It may only be used with the evaluation board it came with, and not to be used for commercial product development.


Copyright 2023 KAGA FEI Co., Ltd.

Downloaded from Arrow.com.

# 4. Recommended Operating Environment

HOST PC:

CPU: 1000MHz or higher

Interface: USB

DC Power Supply: External power supply is not required since 5V power is supplied via USB connection.

# 5. Block Diagram

WKM320AA1-EVB has several connectors. J4 (USB mini-B connector) is used for USB signal that is converted from UART by FT232RQ. The embedded application running on WKM320AA1 uses UART as a host interface usually. Solder bridge port (SB1-4) are used to switch UART interfaces (U9 or J2). J1 and J6 are jumper connector to switch power sources (from LDO or from J2/J3).

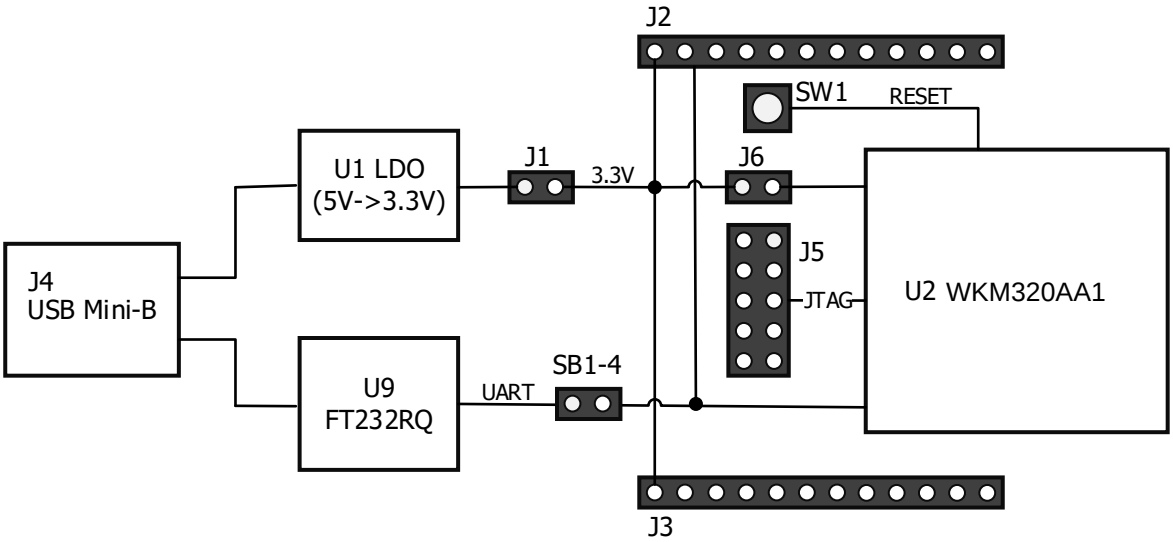


# 6. Evaluation Board Layout

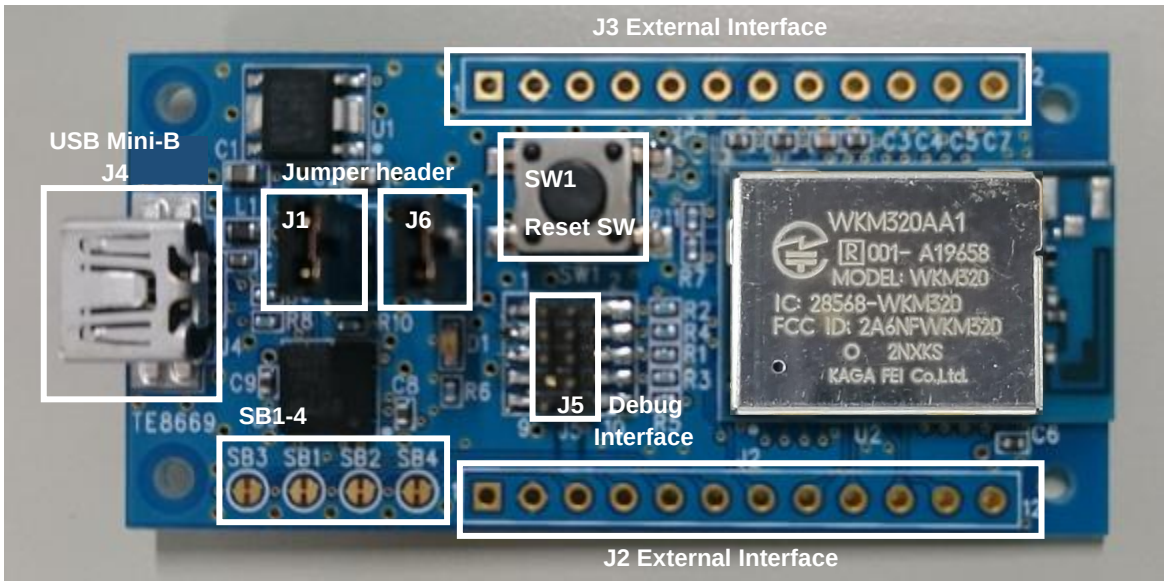



Copyright 2023 KAGA FEI Co., Ltd.

Downloaded from Arrow.com.

# 7. Pin Description of Evaluation Board

J2 External Interface

| Pin# | Name | Direction | Description |
|---|---|---|---|
| 1 | EX3V3_PWR | - | Power Supply 3.3V |
| 2 | GND | - | Ground |
| 3 | UART1_TXD | Output | UART1 TXD signal |
| 4 | UART1_RTSn | Output | UART1 RTS signal |
| 5 | UART1_RXD | Input | UART1 RXD signal |
| 6 | UART1_CTSn | Input | UART1 CTS signal |
| 7 | GPIO41 | Input/Output | |
| 8 | SPI_CLK | Input/Output | |
| 9 | SPI_SEL | Input/Output | |
| 10 | SPI_TXD | Output | |
| 11 | SPI_RXD | Input | |
| 12 | SPI_RDY | Input/Output | |

J3 External Interface

| Pin# | Name | Direction | Description |
|---|---|---|---|
| 1 | EX3V3_PWR | - | Power Supply 3.3V |
| 2 | GND | - | Ground |
| 3 | UART0_TXD | Output | UART0 TXD signal |
| 4 | UART0_RXD | Input | UART0 RXD signal |
| 5 | I2C_SDA | Input/Output | I2C0_SDA |
| 6 | I2C_SCL | Input/Output | I2C0_SCL |
| 7 | WAKEUP0 | Input | |
| 8 | WAKEUP1 | Input | |
| 9 | GPIO41 | Input/Output | |
| 10 | NC_CON5 | - | |
| 11 | NC_CON4 | - | |
| 12 | RESET | Input | Reset signal (Active Low) |


Copyright 2023 KAGA FEI Co., Ltd.

Downloaded from Arrow.com.

J5 Debug Interface (not used by KAGA FEI Co., Ltd. standard application)

| Pin# | Name | Direction | Description |
|---|---|---|---|
| 1 | EX3V3_PWR | - | Power (to monitor power supply voltage) |
| 2 | TMS | Input | JTAG TMS signal |
| 3 | GND | - | Ground |
| 4 | TCK | Input | JTAG TCK signal |
| 5 | GND | - | Ground |
| 6 | TDO | Output | JTAG TDO signal |
| 7 | NC | - | |
| 8 | TDI | Input | JTAG TDI signal |
| 9 | NC | - | |
| 10 | TRSTn | Input | JTAG target reset signal |


Copyright 2023 KAGA FEI Co., Ltd.

Downloaded from Arrow.com.

Note: Please revise the board file to the following contents to operate the evaluation board.

```
--- board.h ---
/* UART1 (WKM320) add */
#define BOARD_DEBUG_UART_TYPE                kSerialPort_Uart
#define BOARD_DEBUG_UART_BASEADDR                    (uint32_t) UART1
#define BOARD_DEBUG_UART_INSTANCE            1U
#define BOARD_DEBUG_UART                     UART1
#define BOARD_DEBUG_UART_CLK_FREQ            CLOCK_GetUartClkFreq(1)
#define BOARD_DEBUG_UART_CLK_ATTACH          kSYS_CLK_to_FAST_UART1
#define BOARD_DEBUG_UART_CLK_DIV             kCLOCK_DivUartFast
#define BOARD_UART_IRQ_HANDLER               UART1_IRQHandler
#define BOARD_UART_IRQ                       UART1_IRQn
```

```
--- main.c ---
int main(void)
{
    BaseType_t result = 0;
    (void)result;

    BOARD_InitBootPins();
    BOARD_InitBootClocks();
    BOARD_InitDebugConsole();

#if 0 /* WKM320 delete */
    BOARD_InitRfCtrl(ANT);

    CLOCK_EnableXtal32K(kCLOCK_Osc32k_External);
    CLOCK_AttachClk(kXTAL32K_to_RTC);

    /* Init input switch GPIO. */
    GPIO_Init();
#endif

    printSeparator();
    PRINTF("wifi cli demo¥r¥n")
```

```
--- pin_mux.c ---
void BOARD_InitPins(void) {                         /*!< Function assigned for the core: Cortex-M4[cm4] */
    PINMUX_PinMuxSet(BOARD_UART0_TX_PIN, BOARD_UART0_TX_PIN_FUNCTION_ID | PINMUX_MODE_DEFAULT);
    PINMUX_PinMuxSet(BOARD_UART0_RX_PIN, BOARD_UART0_RX_PIN_FUNCTION_ID | PINMUX_MODE_DEFAULT);
#if 1 /* WKM320 add */
    PINMUX_PinMuxSet(BOARD_UART1_TX_PIN, BOARD_UART1_TX_PIN_FUNCTION_ID | PINMUX_MODE_DEFAULT);
    PINMUX_PinMuxSet(BOARD_UART1_RX_PIN, BOARD_UART1_RX_PIN_FUNCTION_ID | PINMUX_MODE_DEFAULT);
#endif
    PINMUX_PinMuxSet(BOARD_PUSH_SW1_PIN, BOARD_PUSH_SW1_PIN_FUNCTION_ID | PINMUX_MODE_DEFAULT);
}
```

```
--- pin_mux.h ---
#if 1 /* WKM320 add */
#define BOARD_UART1_TX_PIN                                  44    /*!< Routed pin */
#define BOARD_UART1_TX_PIN_FUNCTION_ID      PINMUX_GPIO44_UART1_TXD    /*!< Pin function id */

#define BOARD_UART1_RX_PIN                                  45    /*!< Routed pin */
#define BOARD_UART1_RX_PIN_FUNCTION_ID      PINMUX_GPIO45_UART1_RXD    /*!< Pin function id */
#endif
```


Copyright 2023 KAGA FEI Co., Ltd.

Downloaded from Arrow.com.

# 8. Software

- Device Drivers for FT232RQ:
  FT232RQ USB-UART converter is built in this board. FT232RQ is made by Future Technology Devices International Limited. Download USB driver from following URL.
  http://www.ftdichip.com/


Copyright 2023 KAGA FEI Co., Ltd.

Downloaded from Arrow.com.

# 9. Example of Connection for Evaluation

## Case1. With PC

- Put jumper on J1 and J6 and connect USB cable
- Connect USB cable between PC and WKM320AA1-EVB
- Run serial terminal software. Default baud rate of the module is 115.2kbps. Please configure baud rate of serial terminal software.

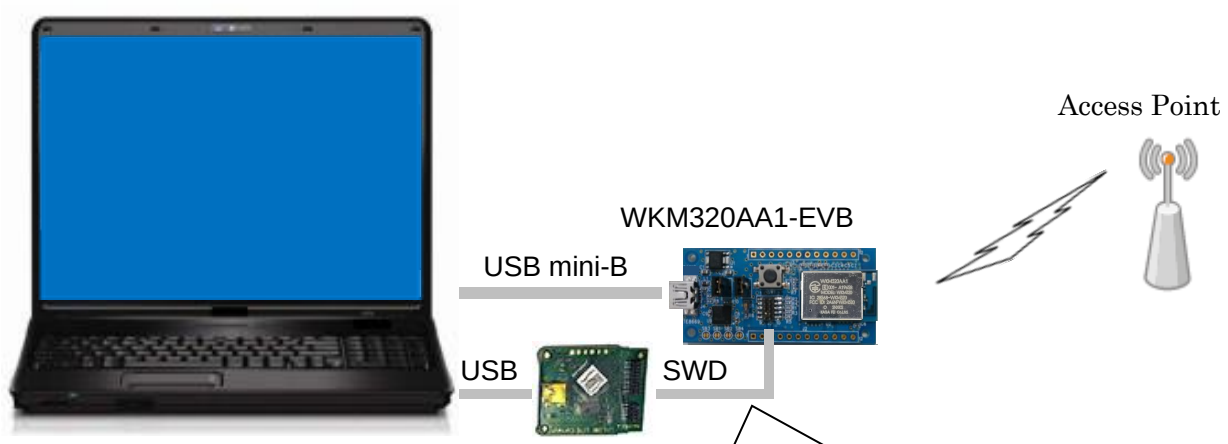


J-Link LITE(*) CortexM-9 JTAG/SWD Emulator that attached with WKM320AA1-EVK is used for debug.

*SWD : Serial Wire Debug

J5 supports the connection of the 10 pin 1.27 mm flat cable.

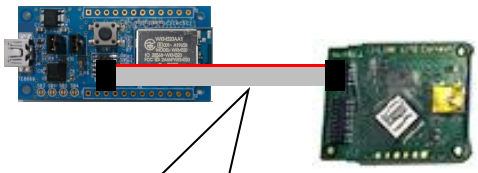

Please be careful about the directions.

***J-Link LITE is only delivered and supported as part of an evaluation kit, which includes an evaluation board. It may only be used with the evaluation board it came with, and not to be used for commercial product development.**


Copyright 2023 KAGA FEI Co., Ltd.

Downloaded from Arrow.com.

Case2. Using external interface (with other MCU)

- Cut the line between the land patterns of Solder Bridge SB1 - SB4 in order to disconnect the UART line of the module from FT232RQ.
- Put jumper on J6 only and supply power source (3.3V) to J2/J3 pin#1.
- DO NOT put jumper on J1 in this case. If do that, MCU and WKM320AA1-EVB may be broken.

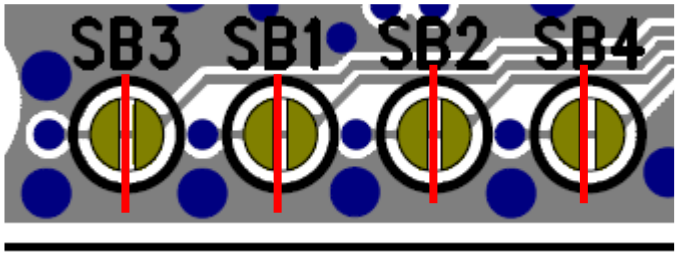


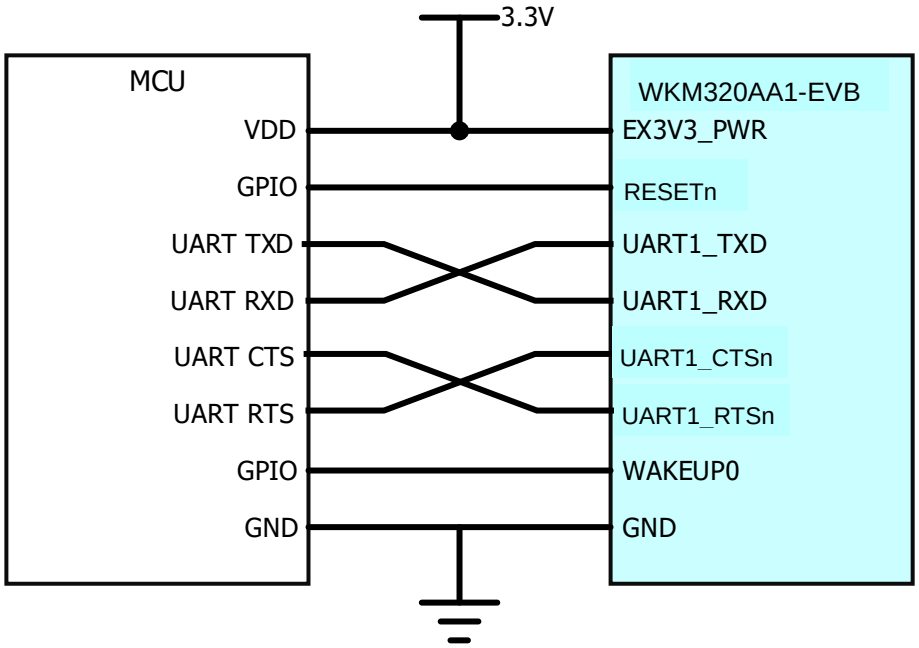



Copyright 2023 KAGA FEI Co., Ltd.

Downloaded from Arrow.com.

# 10. Schematic of Evaluation Board

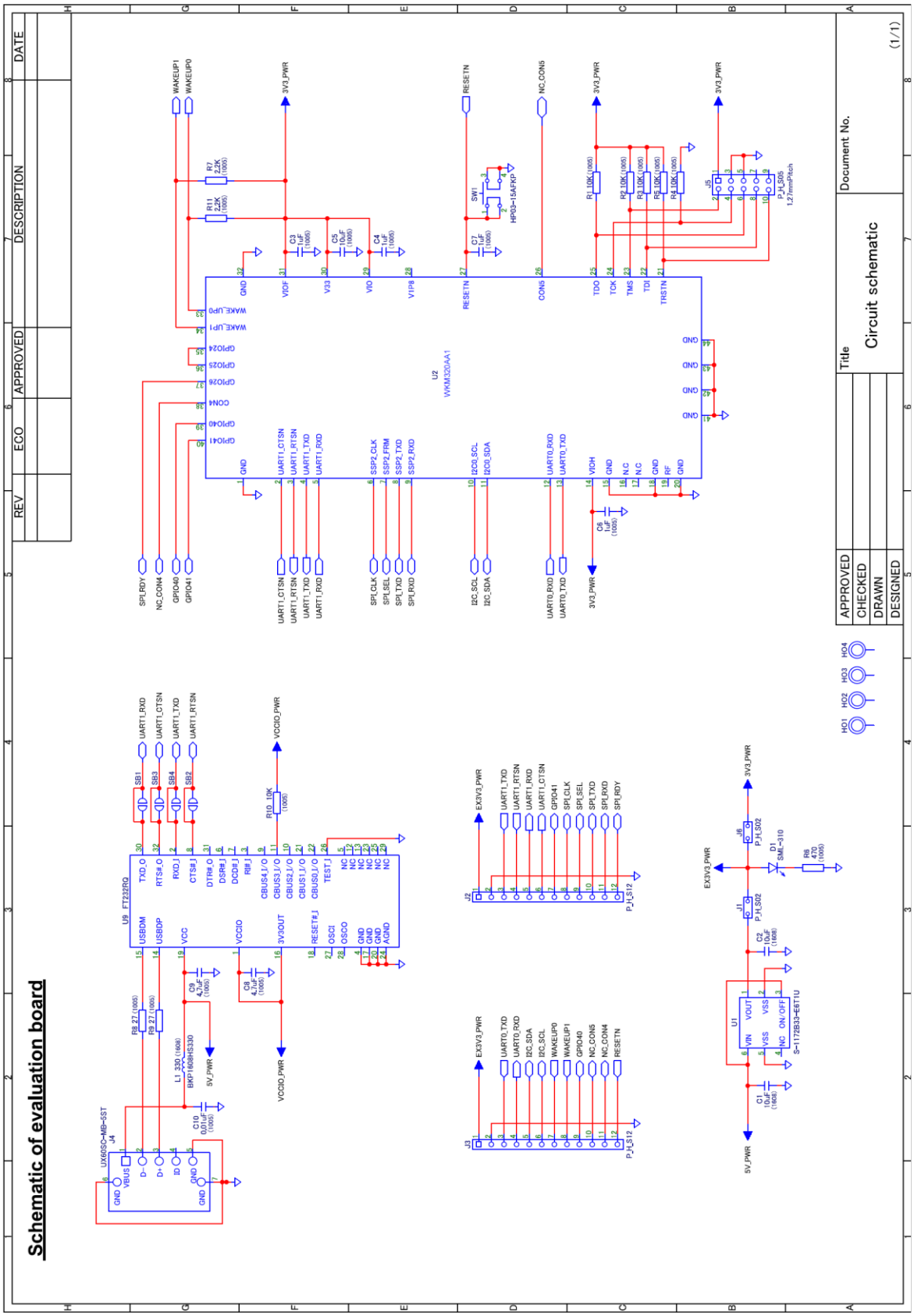



Copyright 2023 KAGA FEI Co., Ltd.

Downloaded from Arrow.com.

# 11. Antenna characteristics example

Example of measurement data.

**Appearance and coordinates definition**

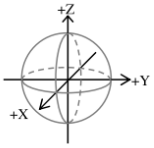


| Frequency | [MHz] | @2400 | @2450 | @2500 |
|---|---|---|---|---|
| **Peak gain** | [dBi] | | | |
| 3-plane | TX-H | -3.1 | -1.9 | -2.7 |
| | TX-V | -2.4 | -1.4 | -2.6 |
| | | **-2.4** | **-1.4** | **-2.6** |
| **Average gain** | [dBi] | | | |
| XY-plane | TX-H | -8.4 | -7.3 | -8.4 |
| | TX-V | -21.1 | -20.3 | -20.5 |
| | Plus(H,V) | -8.2 | -7.1 | -8.2 |
| YZ-plane | TX-H | -16.4 | -14.8 | -15.8 |
| | TX-V | -4.6 | -3.9 | -5.4 |
| | Plus(H,V) | -4.3 | -3.6 | -5.1 |
| XZ-plane | TX-H | -8.6 | -8.4 | -10.0 |
| | TX-V | -15.4 | -13.1 | -14.3 |
| | Plus(H,V) | -7.8 | -7.1 | -8.6 |
| 3plane | TX-H | -10.0 | -9.2 | -10.5 |
| | TX-V | -8.9 | -8.1 | -9.6 |
| | | **-6.4** | **-5.6** | **-7.0** |
| **Efficiency** | [dB] | **-6.6** | **-5.7** | **-7.2** |
| **VSWR** | [:1] | 2.2 | 1.1 | 2.3 |

*Note:The value is average value in 1 round of each inclination direction angle.

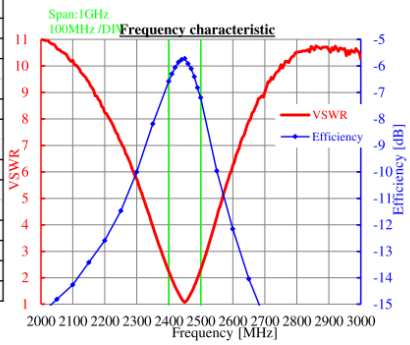


**Radiation pattern**

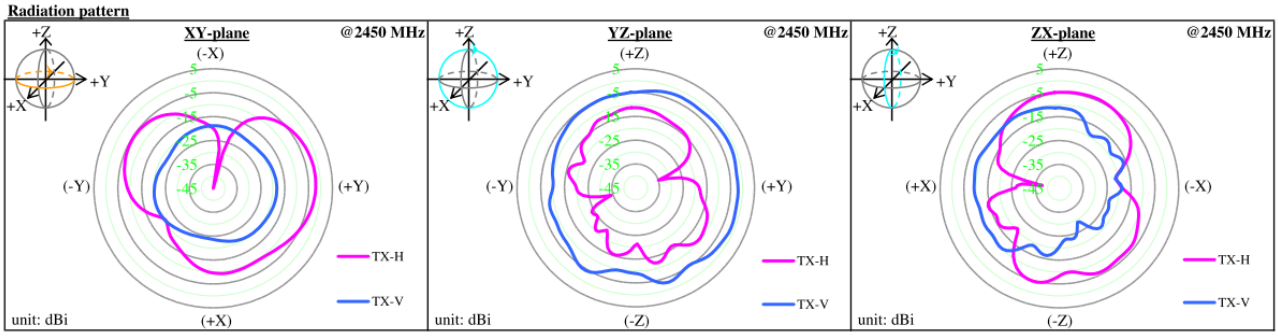



Copyright 2023 KAGA FEI Co., Ltd.

Downloaded from Arrow.com.