Part Number : 751982501
Product Description : VHDM L-Series Single-Ended Backplane Header, 2.00mm Pitch, Guide Pin Signal Module, Pin End Version, 8 Rows, 200 Circuits, 25 Columns, Pin Length 4.75m, Lead-Free
Series Number : 75198
Status : Active
Product Category : Backplane Connectors

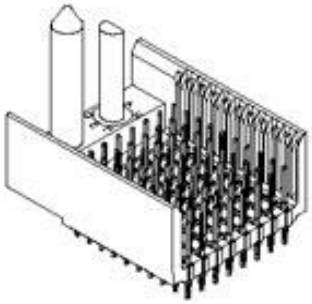

Documents and Resources

Drawings

751982501_sd.pdf

PK-74061-003-001.pdf

Specifications

PS-74031-999-001.pdf

Product Environment Compliance

Compliance

GADSL/IMDS	Not Relevant
China RoHS	per SJ/T 11365-2006
EU ELV	Not Relevant
Low-Halogen Status	Low-Halogen per IEC 61249-2-21
REACH SVHC	Not Contained per D(2024)6225-DC (07 Nov 2024)
EU RoHS	Compliant per EU 2015/863

Compliance Statements

- EU RoHS
- REACH SVHC
- Low-Halogen

Industry Documents

- IPC 1752A Class C
- IPC 1752A Class D

Downloaded from Arrow.com.

- Molex Product Compliance Declaration
- IEC-62474
- chemSHERPA (xml)

Substances of Interest
- PFAS

EU RoHS Certificate of Compliance

Additional Product Compliance Information

Part Details

General

Status	Active
Category	Backplane Connectors
Series	75198
Description	VHDM L-Series Single-Ended Backplane Header, 2.00mm Pitch, Guide Pin Signal Module, Pin End Version, 8 Rows, 200 Circuits, 25 Columns, Pin Length 4.75m, Lead-Free
Application	Backplane
Comments	No Keying Position
Component Type	PCB Header
Product Name	VHDM L-Series
UPC	822348810369

Agency

UL	E29179

Electrical

Current - Maximum per Contact	3.0A
Data Rate	622.0 Mbps
Shielded	No
Voltage - Maximum	120V AC (RMS)/DC

Physical

Circuits (Loaded)	200

Downloaded from Arrow.com.

Circuits (maximum)	200
Color - Resin	Black
Durability (mating cycles max)	200
First Mate / Last Break	No
Flammability	94V-0
Guide to Mating Part	Yes
Keying to Mating Part	No
Material - Metal	High Performance Alloy (HPA), Stainless Steel
Material - Plating Mating	Gold
Material - Plating Termination	Tin
Material - Resin	High Temperature Thermoplastic
Net Weight	10.694/g
Number of Columns	25
Number of Pairs	Open Pin Field
Number of Rows	8
Orientation	Vertical
Packaging Type	Tube
PCB Locator	No
PCB Retention	Yes
PCB Thickness - Recommended	1.80mm
PC Tail Length	2.50mm
Pitch - Mating Interface	2.00mm
Pitch - Termination Interface	2.00mm
Plating min - Mating	0.762µm
Plating min - Termination	0.762µm
Polarized to PCB	No
Temperature Range - Operating	105°C
Termination Interface Style	Through Hole - Compliant Pin

Mates With / Use With

Use with Part(s)

Description	Part Number
Use With	Daughtercard Modules

Downloaded from Arrow.com.

Application Tooling

Global

Description	Part Number
Signal Pin Inserter Repair Tool	622015700

This document was generated on Apr 13, 2026

Downloaded from Arrow.com.