THIS DRAWING IS UNPUBLISHED. RELEASED FOR PUBLICATION -.-.
© COPYRIGHT - BY TYCO ELECTRONICS CORPORATION. ALL RIGHTS RESERVED.

| LOC | DIST |
|---|---|
| CM | 00 |

REVISIONS

| P | LTR | DESCRIPTION | DATE | DWN | APVD |
|---|---|---|---|---|---|
| | A | RELEASED PER ECO-05-006533 | 03AUG05 | KW | CJ |

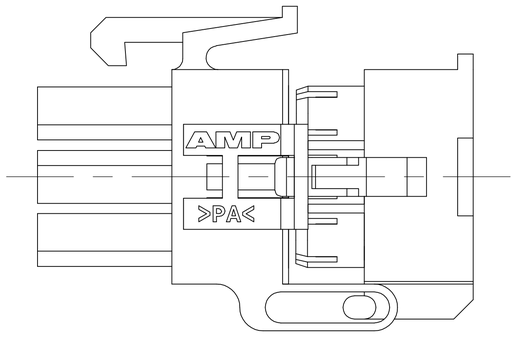


PRE-STAGED CONDITION

1. DIMENSIONS IN BRACKETS ARE IN INCHES.

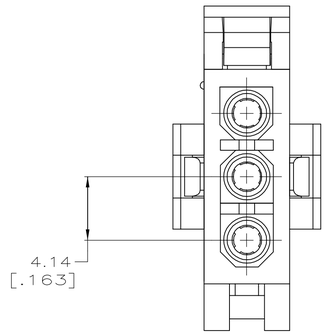


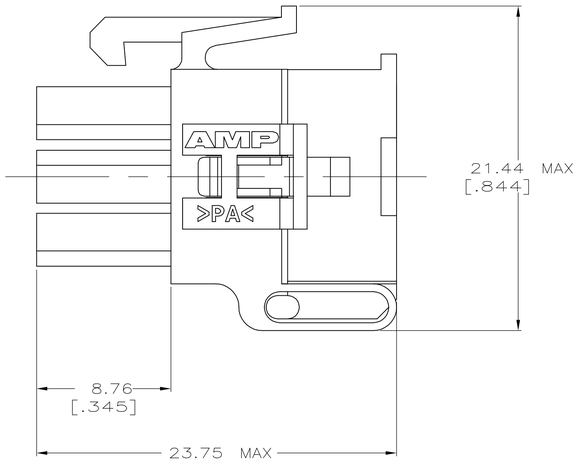


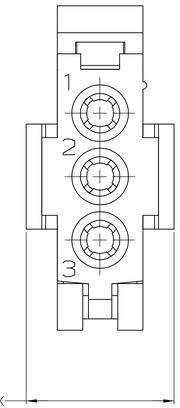


1586616-1
PART NUMBER

METRIC

| | | | |
|---|---|---|---|
| THIS DRAWING IS A CONTROLLED DOCUMENT. | | DWN K. WHITAKER 11APR2005 | tyco Electronics — Tyco Electronics Corporation, Harrisburg, Pa 17105-3608 |
| | | CHK C. JONES 11APR2005 | |
| DIMENSIONS: mm [INCHES] | TOLERANCES UNLESS OTHERWISE SPECIFIED: 0 PLC ± - ; 1 PLC ± - ; 2 PLC ± 0.13[.005] ; 3 PLC ± - ; 4 PLC ± - ; ANGLES ± - | APVD C. JONES 11APR2005 | NAME: PLUG, 3 CIRCUIT, 3 SPECIAL KEYING, MINI UNIVERSAL MATE-N-LOK(TM) 2 |
| | | PRODUCT SPEC — | |
| | | APPLICATION SPEC — | SIZE A1 · CAGE CODE 00779 · DRAWING NO C-1586616 · RESTRICTED TO — |
| MATERIAL NYLON, UL94V-0, NATURAL | FINISH - | WEIGHT — | CUSTOMER DRAWING · SCALE 5:1 · SHEET 1 OF 1 · REV A |



Downloaded from Arrow.com.