A
board drillings

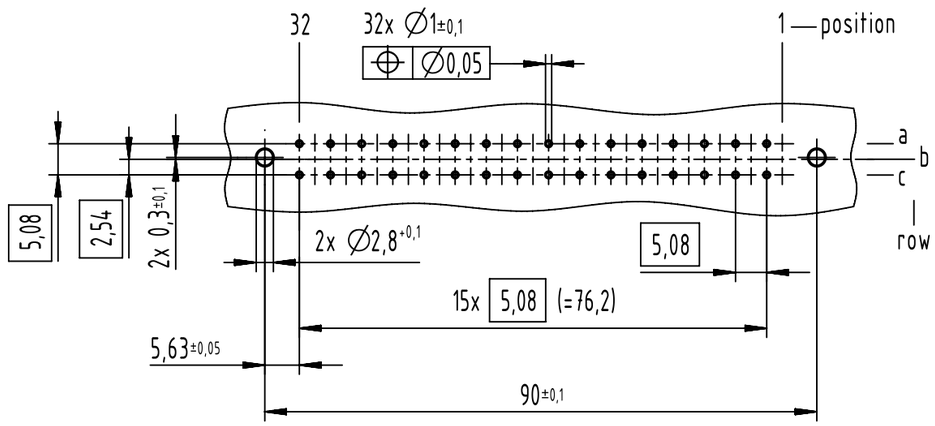

A
contact arrangement

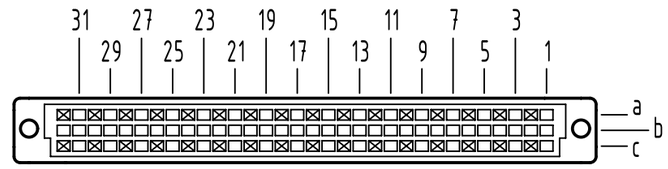

32 solder contacts

⊠ = solder contact

■ = kinked solder contact

□ = position without contact

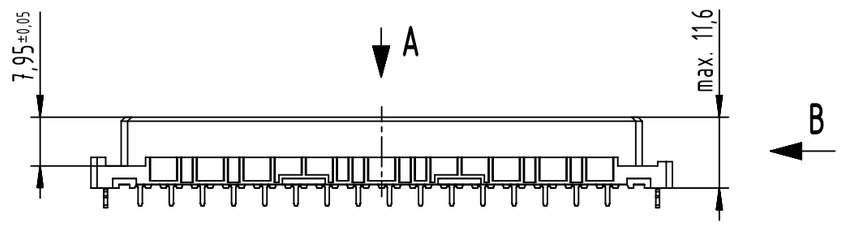

B (2:1)

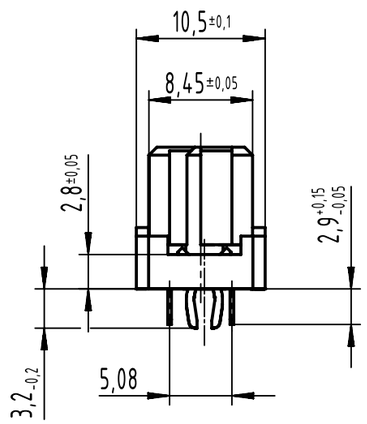

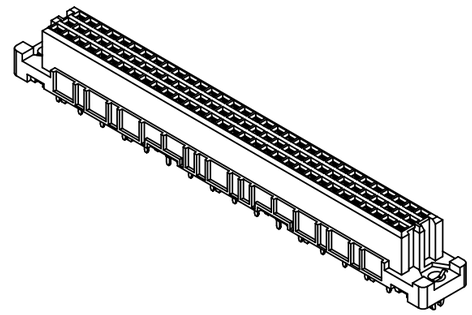

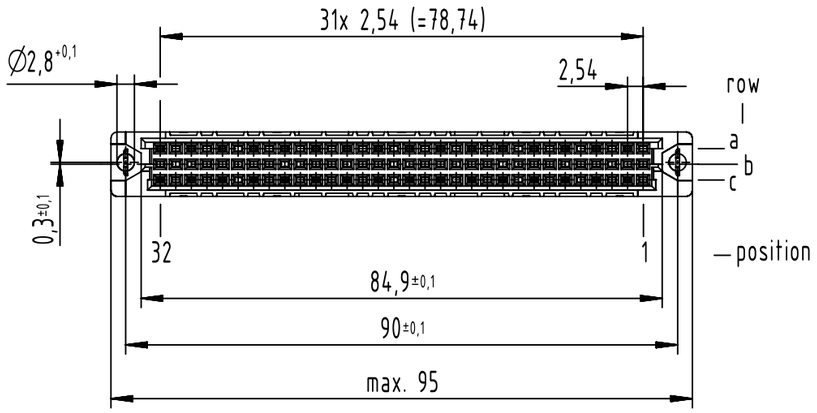

09 03 432 6824	2
09 03 432 2824	1
part no.	performance level

further information see product data sheet

All Dimensions in mm Original Size DIN A3	Scale 1:1	Free size tol. IEC 60603-2		Ref. Sub.	
All rights reserved	Created by STORCK	Inspected by LEHNERT	Standardisation 302077	Date 2021-03-12	State Final Release
Department EL PD	Title DIN Signal type C female solder 2.9 with clip 32-pole				Doc-Key / ECM-Nr. 100173852/UGD/172/G 500000190255
HARTING D-32339 Espelkamp	Type TB	Number 0903432X824		Rev. G	Page 1/1

Downloaded from Arrow.com.

A3