NOTES:

1. MATERIALS AND FINISHES:
   - BODY - BRASS, GOLD PLATING
   - COVER - BRASS, NICKEL PLATING
   - CONTACT - BRASS, GOLD PLATING
   - CONTACT PIN - BeCu, GOLD PLATING
   - INSULATORS - PTFE, NATURAL
   - COUPLING NUT - STAINLESS STEEL, PASSIVATED

2. ELECTRICAL:
   - A. IMPEDANCE: 50 OHM
   - B. FREQUENCY RANGE: DC-22 GHz
   - C. VSWR(RETURN LOSS): 1.30 MAX.
   - D. DIELECTRIC WITHSTANDING VOLTAGE: 1000 VRMS, MIN.

3. MECHANICAL:
   - A. DURABILITY: 500 CYCLES MIN.
   - B. TEMPERATURE RANGE: -65°C TO 165°C

4. PACKAGING:
   - A. QUANTITY: SINGLE PACK
   - B. MARKING: PACKAGING TO BE MARKED "AMPHENOL RF, AD-SMAPSMAJ-2, AND DATE CODE"

REVISIONS

REV	DESCRIPTION	DATE	ECN	APPR
A	RELEASE TO MANUFACTURING	07-JUL-20	15233	SH
B	VSWR REVISED TO 1.30 MAX	16-OCT-20	15399	CJV

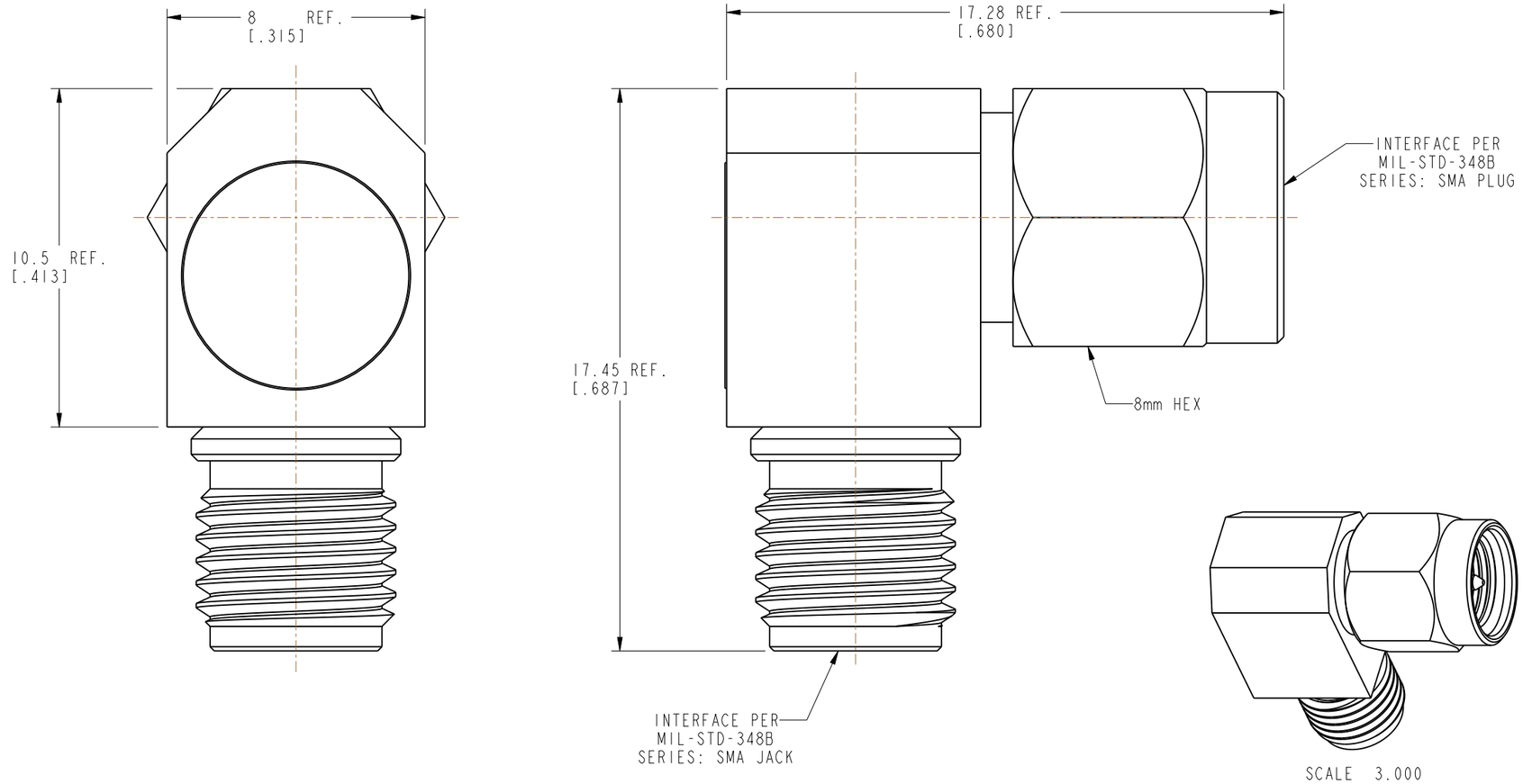

CUSTOMER OUTLINE DRAWING

ALL OTHER SHEETS ARE FOR INTERNAL USE ONLY

NOTICE: These drawings, specifications, or other data (1) are, and remain the property of Amphenol corp. (2) must be returned upon request; and (3) are confidential and not to be disclosed to any person other than those to whom they are given by Amphenol Corp. The furnishing of these drawings, specifications, or other data by Amphenol Corp., or to any other person to anyone for any purpose is not to be regarded by implication or otherwise in any manner licensing, granting rights to permitting such holder or any other person to manufacture, use or sell any product, process or design, patented or otherwise, that may in any way be related to or disclosed by said drawings, specifications, or other data.

THIRD ANGLE PROJ.

REFERENCE

EAR# 8845

UNLESS OTHERWISE SPECIFIED
DIMENSIONS ARE METRIC [INCHES] AND TOLERANCES ARE:

<0.5mm = ±0.05mm	[<0.020 = ±0.002]
>0.5 - 6mm = ±0.1mm	[>0.020 - 0.236 = ±0.004]
>6.00 - 30mm = ±0.2mm	[>0.236 - 1.181 = ±0.008]
>30.00 - 120mm = ±0.3mm	[>1.181 - 4.725 = ±0.012]

ANGLES = ±1°

MATERIAL: SEE NOTES

ENGINEER: C. VIGORITO

DATE: 23-JUN-20

TITLE: HIGH PERFORMANCE R/A SMA PLUG - SMA JACK ADAPTER

SHEET NO. 2 OF 2

SCALE: 6.0:1.0

Amphenol RF

SIZE: B

DRAWING NO. AD-SMAPSMAJ-2

ITEM NO. AD-SMAPSMAJ-2

PART NO. AD-SMAPSMAJ-2

REV: B

Downloaded from Arrow.com.