# OPTIREG™ PMIC TLF30682QVS01

## Power management IC

Order now · Technical documents · Simulation · Family overview · Support

AEC Qualified · RoHS

## Features

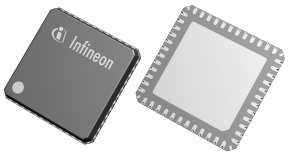

- High-efficiency step-down pre-regulator for wide input voltage range from 3.7 V to 35 V (40 V limited time) with low overall power loss and fast transient performance
- Suitable for operation with ceramic capacitors
- High-efficiency step-down post-regulator for second output voltage generation
- Step-up post-regulator with 5 V output voltage
- Voltage monitoring for two external voltage rails including enable signals
- 16-bit SPI
- Configurable window watchdog
- Green Product (RoHS compliant)

## Potential applications

- Automotive applications
- Advanced Driver Assistance Systems (ADAS)
  - 77 GHz radar ECUs
  - Camera ECUs
- Human Machine Interface (HMI) applications

## Product validation

Qualified for automotive applications. Product validation according to AEC-Q100.

## Description

The OPTIREG™ PMIC TLF30682QVS01 is a multiple rail PMIC (Power management integrated circuit) for automotive applications, optimized for the use in Advanced Driver Assistance Systems (ADAS). The device consists of a battery connected buck regulator (Buck1) providing 3.3 V to external loads and to two low voltage post-regulators. The first post-regulator (Buck2) provides an output voltage of 1.25 V (output voltage adjustment via SPI in the range of 0.9 V to 1.3 V). The second post-regulator (Boost1) provides an output voltage of 5.0 V and is intended to supply up to two CAN transceivers. The TLF30682QVS01 supports 16-bit SPI communication to a microcontroller. SPI commands can read status information from the device and control features of the power regulators, such as PWM synchronization. The device operates at a nominal switching frequency of 2.2 MHz. The switching frequency is selectable via SPI from 1.8 MHz to 2.5 MHz in steps of 100 kHz. The switching regulators can synchronize to an external clock signal. The TLF30682QVS01 can provide a synchronization signal for other DC/DC regulators in the system. The TLF30682QVS01 provides two voltage


Downloaded from Arrow.com.

monitoring channels with monitoring inputs and enable outputs. The monitoring channels can be used to control and monitor external LDOs or external DC/DC switching regulators.

| Type | Package | Marking |
|---|---|---|
| TLF30682QVS01 | PG-VQFN-48 | TLF30682 S01 |



Downloaded from Arrow.com.

# Table of contents

**Features** . . . 1
**Potential applications** . . . 1
**Product validation** . . . 1
**Description** . . . 1
**Table of contents** . . . 3
**1 Block diagram** . . . 7
**2 Pin configuration** . . . 8
2.1 Pin assignment . . . 8
2.2 Pin definitions and functions PG-VQFN-48 . . . 8
**3 General product characteristics** . . . 13
3.1 Absolute maximum ratings . . . 13
3.2 Functional range . . . 15
3.3 Thermal resistance . . . 16
3.4 Quiescent current . . . 17
3.5 Typical performance characteristics quiescent current . . . 18
**4 Power converters and power management** . . . 19
4.1 High voltage step-down regulator Buck1 . . . 19
4.1.1 Functional description Buck1 . . . 19
4.1.2 Electrical characteristics Buck1 . . . 22
4.1.3 Typical performance characteristics Buck1 . . . 24
4.2 Post-regulator step-down converter Buck2 . . . 25
4.2.1 Functional description Buck2 . . . 25
4.2.2 Electrical characteristics Buck2 . . . 27
4.2.3 Typical performance characteristics Buck2 . . . 29
4.3 Post-regulator step-up converter Boost1 . . . 30
4.3.1 Functional description Boost1 . . . 30
4.3.2 Electrical characteristics Boost1 . . . 31
4.3.3 Typical performance characteristics Boost1 . . . 32
4.4 Support of external voltage rails . . . 33
4.4.1 Electrical characteristics support of external voltage rails . . . 33
**5 Central functions** . . . 34
5.1 Supply voltages . . . 34
5.1.1 Electrical characteristics supply voltages . . . 34
5.2 Enable functionality . . . 35
5.2.1 ENA pin configurability . . . 35
5.2.2 Electrical characteristics enable . . . 36
5.2.3 Typical performance characteristics enable . . . 37



Downloaded from Arrow.com.

5.3 Power sequencing and soft start . . . 38
5.3.1 Electrical characteristics power sequencing and soft start . . . 40
5.4 Frequency generation and clock synchronization . . . 41
5.4.1 Electrical characteristics frequency generation and clock synchronization . . . 42
5.4.2 Typical performance characteristics frequency generation . . . 44
5.5 IOVDD - overvoltage detection and undervoltage detection . . . 45
5.5.1 Electrical characteristics IOVDD - overvoltage detection and undervoltage detection . . . 45

**6 Monitoring functions . . . 47**
6.1 Voltage monitoring . . . 47
6.1.1 Monitoring of R1VSx battery supply . . . 47
6.1.2 Monitoring of output voltages . . . 47
6.1.3 Monitoring of external voltage rails . . . 47
6.1.4 Monitoring of internal supply voltages and bandgaps . . . 47
6.1.5 Electrical characteristics voltage monitoring . . . 48
6.2 Thermal protection . . . 50
6.2.1 Electrical characteristics temperature sensor monitoring block . . . 51

**7 Microcontroller interface and supervisory functions . . . 52**
7.1 Microcontroller interface supply IOVDD pin . . . 52
7.1.1 Electrical characteristics microcontroller interface supply . . . 54
7.2 Serial peripheral interface (SPI) . . . 55
7.2.1 SPI introduction . . . 55
7.2.2 SPI write access to protected registers . . . 57
7.2.3 SPI write initiated state transition request and regulator configuration . . . 58
7.2.4 Configuration of Buck2 output voltage via SPI . . . 58
7.2.5 SPI timing . . . 59
7.2.6 Electrical characteristics SPI . . . 60
7.2.7 Electrical characteristics SPI timing . . . 61
7.3 Reset generation (ROT signal) . . . 63
7.3.1 Electrical characteristics ROT . . . 63
7.4 Interrupt generation (INT signal) . . . 64
7.4.1 Electrical characteristics INT . . . 66
7.5 Window watchdog . . . 68
7.5.1 Window watchdog timing . . . 71
7.5.2 Electrical characteristics window watchdog . . . 76
7.6 Microcontroller programming mode . . . 76
7.6.1 Electrical characteristics microcontroller programming mode . . . 77

**8 State machine . . . 78**
8.1 State machine introduction . . . 78
8.2 Operation states . . . 79
8.3 State transitions and trigger signals . . . 81
8.4 Electrical characteristics state machine . . . 84



Downloaded from Arrow.com.

**9 SPI registers** . . . 85
9.1 SPI register definition . . . 87
9.1.1 Device configuration registers (device startup default configuration) . . . 87
9.1.1.1 Register DEVCFG0 . . . 88
9.1.1.2 Register CLKCFG0 . . . 89
9.1.1.3 Register CLKCFG1 . . . 90
9.1.1.4 Register PWDCFG0 . . . 91
9.1.1.5 Register PWDCFG1 . . . 92
9.1.1.6 Register PWDCFG2 . . . 93
9.1.2 Read-only registers for protected configuration registers . . . 94
9.1.2.1 Register RWDCFG0 . . . 94
9.1.2.2 Register RWDCFG1 . . . 95
9.1.2.3 Register RWDCFG2 . . . 96
9.1.3 Protected device configuration registers . . . 97
9.1.3.1 Register DEVCTRL . . . 98
9.1.3.2 Register DEVCTRLN . . . 99
9.1.3.3 Register B2VCTRL . . . 100
9.1.3.4 Register B2VCTRLN . . . 101
9.1.4 General registers . . . 102
9.1.4.1 Register PROTCFG . . . 102
9.1.4.2 Register WWDSCMD . . . 103
9.1.5 Event status registers . . . 104
9.1.5.1 Register GSF . . . 104
9.1.5.2 Register SYSSF0 . . . 106
9.1.5.3 Register SYSSF1 . . . 107
9.1.5.4 Register MCUSF0 . . . 108
9.1.5.5 Register MCUSF1 . . . 109
9.1.5.6 Register SPISF . . . 110
9.1.5.7 Register MONSF0 . . . 111
9.1.5.8 Register MONSF1 . . . 112
9.1.5.9 Register MONSF2 . . . 113
9.1.5.10 Register OTSF0 . . . 114
9.1.5.11 Register OTSF1 . . . 115
9.1.5.12 Register OCSF1 . . . 116
9.1.6 Device status information registers . . . 117
9.1.6.1 Register OTSTAT0 . . . 117
9.1.6.2 Register VMONSTAT0 . . . 118
9.1.6.3 Register DEVSTAT . . . 119
9.1.6.4 Register PROTSTAT . . . 120
9.1.6.5 Register WWDSTAT . . . 121
9.1.6.6 Register MPSSTAT0 . . . 122
9.1.6.7 Register B2VSTAT . . . 123



Downloaded from Arrow.com.

9.1.7 Device information registers . . . . . 124
9.1.7.1 Register HWDECT0 . . . . . 125
9.1.7.2 Register DEVID . . . . . 126
**10 Application information** . . . . . 127
**11 Package information** . . . . . 129
**Revision history** . . . . . 130
**Disclaimer** . . . . . 131



Downloaded from Arrow.com.

# 1 Block diagram

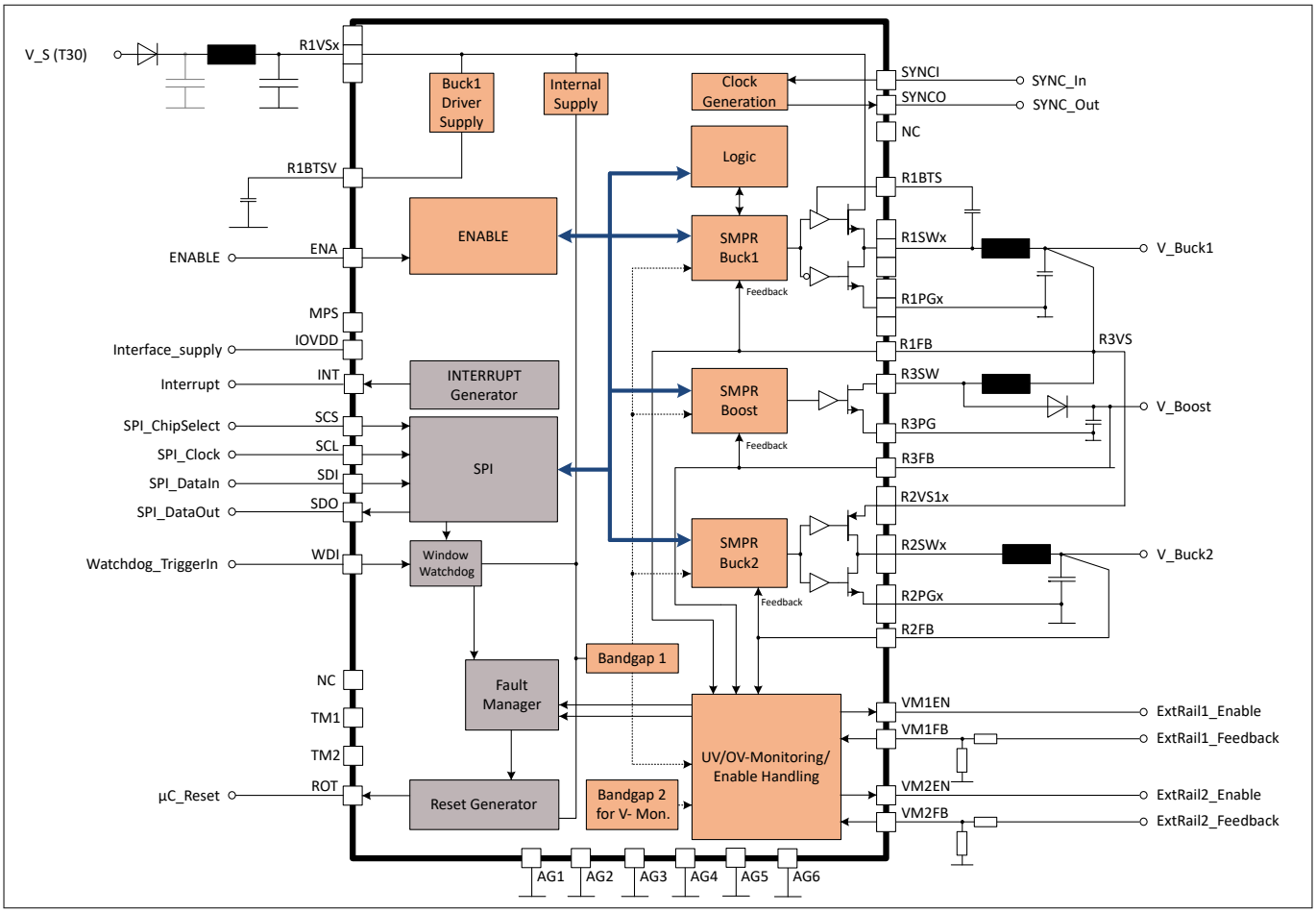


**Figure 1 Block diagram**



Downloaded from Arrow.com.

# 2 Pin configuration

## 2.1 Pin assignment

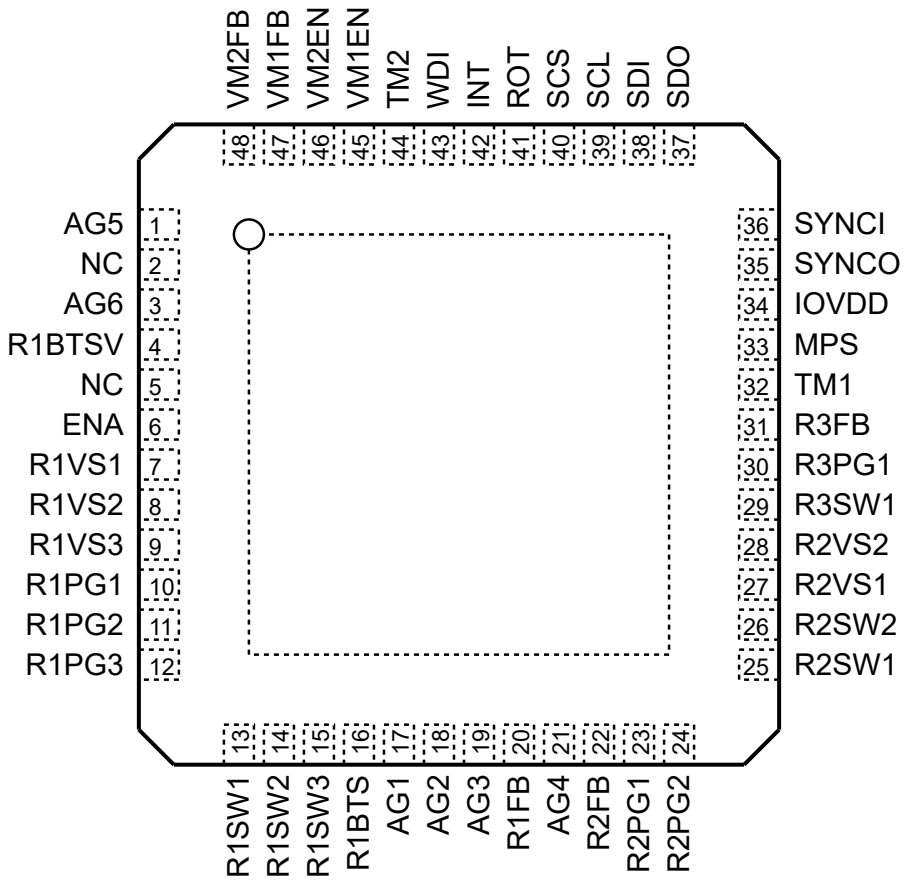


**Figure 2** **Pin configuration**

## 2.2 Pin definitions and functions PG-VQFN-48

| Pin | Symbol | Function |
|---|---|---|
| 1 | AG5 | Analog ground, pin 5:<br>Connect this pin directly to ground via a low ohmic and low inductive trace. |
| 2 | NC | Not connected:<br>Leave the pin floating in the application. |
| 3 | AG6 | Analog ground, pin 6:<br>Connect this pin directly to ground via a low ohmic and low inductive trace. |



Downloaded from Arrow.com.

| Pin | Symbol | Function |
|---|---|---|
| 4 | R1BTSV | Decoupling of internal supply voltage:<br>Connect a decoupling capacitor between this pin and R1PGx. |
| 5 | NC | Not connected:<br>Leave this pin floating in the application. |
| 6 | ENA | Enable input:<br>A valid enable condition at this pin enables the device. |
| 7 | R1VS1 | High voltage regulator supply voltage, pin 1:<br>Connect this pin in parallel with R1VS2 and R1VS3 and then to the supply (battery) voltage via a reverse protection diode. Additionally connect a capacitor between this pin and ground. An EMC filter is recommended. |
| 8 | R1VS2 | High voltage regulator supply voltage, pin 2:<br>Connect this in parallel with R1VS1 and R1VS3 and then to the supply (battery) voltage via a reverse protection diode. Additionally connect a capacitor between this pin and ground. An EMC filter is recommended. |
| 9 | R1VS3 | High voltage regulator supply voltage, pin 3:<br>Connect this pin in parallel with R1VS1 and R1VS2 and then to the supply (battery) voltage via a reverse protection diode. Additionally connect a capacitor between this pin and ground. An EMC filter is recommended. |
| 10 | R1PG1 | High voltage regulator power ground, pin 1:<br>Connect this pin in parallel with R1PG2 and R1PG3 and then to the Buck1 output capacitor ground terminal to ground. |
| 11 | R1PG2 | High voltage regulator power ground, pin 2:<br>Connect this pin in parallel with R1PG1 and R1PG3 and then to the Buck1 output capacitor ground terminal to ground. |
| 12 | R1PG3 | High voltage regulator power ground, pin 3:<br>Connect this pin n parallel with R1PG1 and R1PG2 and to the Buck1 output capacitor ground terminal to ground. |
| 13 | R1SW1 | High voltage regulator power stage output, pin 1:<br>Connect this pin in parallel with R1SW2 and R1SW3 and then to the pre-regulator Buck1 output filter inductor. |
| 14 | R1SW2 | High voltage regulator power stage output, pin 2:<br>Connect this pin in parallel with R1SW1 and R1SW3 and then to the pre-regulator output filter inductor. |
| 15 | R1SW3 | High voltage regulator power stage output, pin 3:<br>Connect this pin in parallel with R1SW1 and R1SW2 and then to the pre-regulator output filter inductor. |
| 16 | R1BTS | Bootstrap supply voltage:<br>Connect this pin via the bootstrap capacitor to the R1SWx pins. |
| 17 | AG1 | Analog ground, pin 1:<br>Connect this pin directly to ground via a low ohmic and low inductive trace. |


Downloaded from Arrow.com.

| Pin | Symbol | Function |
|---|---|---|
| 18 | AG2 | Analog ground, pin 2:<br>Connect this pin directly to ground via a low ohmic and low inductive trace. |
| 19 | AG3 | Analog ground, pin 3:<br>Connect this pin directly to ground via a low ohmic and low inductive trace. |
| 20 | R1FB | High voltage regulator output voltage feedback:<br>Connect this pin to the Buck1 output capacitor. |
| 21 | AG4 | Analog ground, pin 4:<br>Connect this pin directly to ground via a low ohmic and low inductive trace. |
| 22 | R2FB | Post-regulator output voltage feedback:<br>Connect this pin to the Buck2 output capacitor. |
| 23 | R2PG1 | Pre-regulator power ground, pin 1:<br>Connect this pin in parallel with R2PG2 and then to the Buck2 output capacitor ground terminal to ground. |
| 24 | R2PG2 | Pre-regulator power ground, pin 2:<br>Connect this pin in parallel with R2PG1 and then to the Buck2 output capacitor ground terminal to ground. |
| 25 | R2SW1 | Post-regulator power stage output, pin 1:<br>Connect this pin in parallel with R2SW2 and then to the Buck2 output filter inductor. |
| 26 | R2SW2 | Post-regulator power stage output, pin 2:<br>Connect this pin in parallel with R2SW1 and then to the Buck2 output filter inductor. |
| 27 | R2VS1 | Post-regulator supply voltage, pin 1:<br>Connect this pin to the Buck1 output capacitor.<br>In order to compensate for disturbances, add a local bypass capacitor. |
| 28 | R2VS2 | Post-regulator supply voltage, pin 2:<br>Connect this pin to the Buck1 output capacitor.<br>In order to compensate for disturbances, add a local bypass capacitor. |
| 29 | R3SW1 | Regulator 3 power stage output, pin 1:<br>Connect this pin to Boost1 inductor and external rectifying diode. |
| 30 | R3PG1 | Regulator 3 power ground, pin 1:<br>Connect this pin to Boost1 output capacitor ground terminal to ground. |
| 31 | R3FB | Regulator 3 output voltage feedback pin:<br>Connect this pin to Boost1 output capacitor. |
| 32 | TM1 | Test mode 1:<br>Not for customer use. Leave this pin floating in the application. |
| 33 | MPS | Microcontroller programming mode<br>Connect this pin to ground for normal operation in the application. Optionally the pin can be used for microcontroller programming purposes, see Application information. |


Downloaded from Arrow.com.

| Pin | Symbol | Function |
|---|---|---|
| 34 | IOVDD | I/O supply voltage:<br>Connect this pin to the I/O supply voltage of the microcontroller.<br>Add a decoupling capacitor. |
| 35 | SYNCO | Synchronization output:<br>Optional: Connect this pin to an external switch-mode post-regulator synchronization input. This pin delivers the internal switching frequency signal, either in phase or shifted by 180°, depending on the settings via SPI. The switch-mode post-regulator synchronizes to the rising edge.<br>If this pin is not used, then leave it floating. |
| 36 | SYNCI | Synchronization input:<br>Connect this pin to an optional external synchronization signal to synchronize the switching of the internal switch-mode regulators. The feature needs to be enabled via SPI.<br>If the pin is not used, then leave it floating. |
| 37 | SDO | Serial peripheral interface, signal data output:<br>SPI signalling port;<br>connect this pin to the SPI port "data input" of the microcontroller to send status information during SPI communication. |
| 38 | SDI | Serial peripheral interface, signal data input:<br>SPI signalling port;<br>connect this pin to the SPI port "data input" of the microcontroller to receive status information during SPI communication. |
| 39 | SCL | Serial peripheral interface, signal clock input:<br>SPI signalling port;<br>connect this pin to the SPI port "clock" of the microcontroller to clock the device for SPI communication. |
| 40 | SCS | Serial peripheral interface, signal chip select:<br>SPI signalling port;<br>connect this pin to the SPI port "chip select" of the microcontroller to address the device for SPI communication. |
| 41 | ROT | Reset output:<br>Open drain structure with internal pull up resistor.<br>"Low" indicates a reset event for the microcontroller.<br>Connect this pin to the microcontroller reset input. |
| 42 | INT | Interrupt output:<br>Push-pull output. A "low" pulse at this pin indicates an interrupt, and the microcontroller reads the SPI status registers.<br>Connect this pin to a non-maskable interrupt port (NMI) of the microcontroller. |
| 43 | WDI | Watchdog input, trigger signal:<br>Connect this pin to the "trigger signal output" of the microcontroller.<br>This pin has an internal pull-down.<br>If this pin is not used, then leave it floating. |


Downloaded from Arrow.com.

| Pin | Symbol | Function |
|---|---|---|
| 44 | TM2 | Test mode 2:<br>Not for customer use. Connect this pin to GND in the application. |
| 45 | VM1EN | Enable signal for external voltage rails 1:<br>Connect this pin to the enable pin of an optional external voltage regulator 1.<br>If the external regulator is not used, then connect this pin to ground. |
| 46 | VM2EN | Enable signal for external voltage rails 2:<br>Connect this pin to the enable pin of an optional external voltage regulator 2.<br>If the external regulator is not used, then connect this pin to ground. |
| 47 | VM1FB | Input for optional external voltage monitoring rail 1:<br>Connect this pin to an external resistor divider to adjust the overvoltage threshold and the undervoltage threshold of the monitored external voltage generated by the optional external voltage regulator 1.<br>If the optional external regulator is not used, then connect this pin to ground. |
| 48 | VM2FB | Input for optional external voltage monitoring rail 2:<br>Connect this pin to an external resistor divider to adjust the overvoltage threshold and the undervoltage threshold of the monitored external voltage generated by the optional external voltage regulator 2.<br>If the optional external regulator is not used, then connect this pin to ground. |
| Cooling tab | GND | Cooling tab:<br>Internally connected to GND. |
| – | EP1 | Edge pin 1:<br>Keep the area below this pin free of ground or other signals. Do not solder this pin to ground or any other signal. This pin must be kept free of soldering. |
| – | EP2 | Edge pin 2:<br>Keep the area below this pin free of ground or other signals. Do not solder this pin to ground or any other signal. This pin must be kept free of soldering. |
| – | EP3 | Edge pin 3:<br>Keep the area below this pin free of ground or other signals. Do not solder this pin to ground or any other signal. This pin must be kept free of soldering. |
| – | EP4 | Edge pin 4:<br>Keep the area below this pin free of ground or other signals. Do not solder this pin to ground or any other signal. This pin must be kept free of soldering. |


Downloaded from Arrow.com.

# 3 General product characteristics

## 3.1 Absolute maximum ratings

**Table 1 Absolute maximum ratings**[1)]

$T_j$ = -40°C to 150°C; all voltages with respect to ground, positive current flowing into pin, (unless otherwise specified)

| Parameter | Symbol | Values | | | Unit | Note or condition | Number |
|---|---|---|---|---|---|---|---|
| | | Min. | Typ. | Max. | | | |
| **Pins** | | | | | | | |
| MPS | $V_{MPS}$ | -0.3 | – | 6.0 | V | – | P_3.1.1 |
| IOVDD | $V_{IOVDD}$ | -0.3 | – | 6.0 | V | – | P_3.1.2 |
| SCS | $V_{SCS}$ | -0.3 | – | 6.0 | V | – | P_3.1.3 |
| SCL | $V_{SCL}$ | -0.3 | – | 6.0 | V | – | P_3.1.4 |
| SDI | $V_{SDI}$ | -0.3 | – | 6.0 | V | – | P_3.1.5 |
| SDO | $V_{SDO}$ | -0.3 | – | 6.0 | V | – | P_3.1.6 |
| WDI | $V_{WDI}$ | -0.3 | – | 6.0 | V | – | P_3.1.7 |
| INT | $V_{INT}$ | -0.3 | – | 6.0 | V | – | P_3.1.10 |
| AG1 | $V_{AG1}$ | -0.3 | – | 0.3 | V | – | P_3.1.13 |
| AG2 | $V_{AG2}$ | -0.3 | – | 0.3 | V | – | P_3.1.14 |
| AG3 | $V_{AG3}$ | -0.3 | – | 0.3 | V | – | P_3.1.15 |
| AG4 | $V_{AG4}$ | -0.3 | – | 0.3 | V | – | P_3.1.16 |
| AG5 | $V_{AG5}$ | -0.3 | – | 0.3 | V | – | P_3.1.17 |
| AG6 | $V_{AG6}$ | -0.3 | – | 0.3 | V | – | P_3.1.18 |
| SYNCI | $V_{SYNCI}$ | -0.3 | – | 6.0 | V | – | P_3.1.19 |
| SYNCO | $V_{SYNCO}$ | -0.3 | – | 6.0 | V | – | P_3.1.20 |
| TM1 | $V_{TM1}$ | -0.3 | – | 6.0 | V | – | P_3.1.22 |
| ENA | $V_{ENA}$ | -0.3 | – | 35 | V | [2)] | P_3.1.23 |
| ENA | $I_{ENA}$ | -5.0 | – | – | mA | – | P_3.1.24 |
| R1BTS | $V_{R1BTS}$ | $V_{R1SWx}$ - 0.3 | – | $V_{R1SWx}$ + 6.0 | V | – | P_3.1.25 |
| R1BTSV | $V_{R1BTSV}$ | -0.3 | – | 6.0 | V | – | P_3.1.26 |
| R1VS1 | $V_{R1VS1}$ | -0.3 | – | 35 | V | [2)] | P_3.1.27 |
| R1VS2 | $V_{R1VS2}$ | -0.3 | – | 35 | V | [2)] | P_3.1.28 |
| R1VS3 | $V_{R1VS3}$ | -0.3 | – | 35 | V | [2)] | P_3.1.29 |
| R1SW1 | $V_{R1SW1}$ | -0.3 | – | $V_{R1VSx}$ + 2.0 | V | – | P_3.1.30 |
| R1SW2 | $V_{R1SW2}$ | -0.3 | – | $V_{R1VSx}$ + 2.0 | V | – | P_3.1.31 |

**(table continues...)**



Downloaded from Arrow.com.

**Table 1 (continued) Absolute maximum ratings**[1)]

$T_j$ = -40°C to 150°C; all voltages with respect to ground, positive current flowing into pin, (unless otherwise specified)

| Parameter | Symbol | Values | | | Unit | Note or condition | Number |
|---|---|---|---|---|---|---|---|
| | | Min. | Typ. | Max. | | | |
| R1SW3 | $V_{R1SW3}$ | -0.3 | – | $V_{R1VSx}$ + 2.0 | V | – | P_3.1.32 |
| R1PG1 | $V_{R1PG1}$ | -0.3 | – | 0.3 | V | – | P_3.1.33 |
| R1PG2 | $V_{R1PG2}$ | -0.3 | – | 0.3 | V | – | P_3.1.34 |
| R1PG3 | $V_{R1PG3}$ | -0.3 | – | 0.3 | V | – | P_3.1.35 |
| R1FB | $V_{R1FB}$ | -0.3 | – | 7.0 | V | – | P_3.1.36 |
| R2VS1 | $V_{R2VS1}$ | -0.3 | – | 7.0 | V | – | P_3.1.37 |
| R2VS2 | $V_{R2VS2}$ | -0.3 | – | 7.0 | V | – | P_3.1.38 |
| R2SW1 | $V_{R2SW1}$ | -0.3 | – | 7.0 | V | – | P_3.1.39 |
| R2SW2 | $V_{R2SW2}$ | -0.3 | – | 7.0 | V | – | P_3.1.40 |
| R2PG1 | $V_{R2PG1}$ | -0.3 | – | 0.3 | V | – | P_3.1.41 |
| R2PG2 | $V_{R2PG2}$ | -0.3 | – | 0.3 | V | – | P_3.1.42 |
| R2FB | $V_{R2FB}$ | -0.3 | – | 7.0 | V | – | P_3.1.43 |
| R3SW1 | $V_{R3SW1}$ | -0.3 | – | 7.0 | V | – | P_3.1.44 |
| R3PG1 | $V_{R3PG1}$ | -0.3 | – | 0.3 | V | – | P_3.1.45 |
| R3FB | $V_{R3FB}$ | -0.3 | – | 7.0 | V | – | P_3.1.46 |
| VM1FB | $V_{VM1FB}$ | -0.3 | – | 6.0 | V | – | P_3.1.47 |
| VM1EN | $V_{VM1EN}$ | -0.3 | – | 6.0 | V | – | P_3.1.48 |
| VM2FB | $V_{VM2FB}$ | -0.3 | – | 6.0 | V | – | P_3.1.49 |
| VM2EN | $V_{VM2EN}$ | -0.3 | – | 6.0 | V | – | P_3.1.50 |
| ROT | $V_{ROT}$ | -0.3 | – | 6.0 | V | – | P_3.1.51 |
| TM2 | $V_{TM2}$ | -0.3 | – | 6.0 | V | – | P_3.1.52 |
| **Temperatures** | | | | | | | |
| Junction temperature | $T_j$ | -40 | – | 150 | °C | – | P_3.1.53 |
| Storage temperature | $T_{stg}$ | -55 | – | 150 | °C | – | P_4.1.9 |
| **ESD susceptibility** | | | | | | | |
| ESD susceptibility all pins | $V_{ESD,HBM}$ | -2 | – | 2 | kV | [3)] HBM | P_4.1.10 |
| ESD susceptibility all pins | $V_{ESD,CDM}$ | -500 | – | 500 | V | [4)] CDM | P_4.1.12 |
| ESD susceptibility of corner pins to GND | $V_{ESD,Corner}$ | -750 | – | 750 | V | CDM[4)] | P_4.1.13 |

1) Not subject to production test, specified by design.
2) Maximum rating is extended to 40 V for an overall time of 7 minutes during the lifetime of the product (load dump requirement).
3) Human body model (HBM) robustness according to ANSI/ESDA/JEDEC JS-001 (1.5 kΩ, 100 pF).
4) Charged device model (CDM) robustness according to JEDEC JESD22-C101.



Downloaded from Arrow.com.

***Notes**:*

***1.*** *Stresses above the ones listed here may cause permanent damage to the device. Exposure to absolute maximum rating conditions for extended periods of time may affect device reliability.*

***2.*** *Integrated protection functions are designed to prevent IC destruction under fault conditions described in the datasheet. Fault conditions are considered as outside the normal operating range. Protection functions are not designed for continuous repetitive operation.*

## 3.2 Functional range

**Table 2 Functional range**

| Parameter | Symbol | Values | | | Unit | Note or condition | Number |
|---|---|---|---|---|---|---|---|
| | | Min. | Typ. | Max. | | | |
| Supply voltage range for normal operation | $V_{R1VSx}$ | 5.0 | – | 35 | V | 1) | P_3.2.1 |
| Supply voltage range for reduced operation | $V_{R1VSx}$ | 3.7 | – | 5.0 | V | 1) 2) | P_4.2.5 |
| Junction Temperature | $T_j$ | -40 | – | 150 | °C | – | P_4.2.9 |

1) When first powered up, a proper startup of the device can only be ensured by applying minimum 6 V at pins R1VSx for at least 2 ms. The device may start at even lower voltages.
2) The current capability of Buck1 is reduced to limit the current stress in the device.

***Note**:* *Within the functional range, the IC operates as described in the circuit description. The electrical characteristics are specified within the conditions given in the electrical characteristics table.*



Downloaded from Arrow.com.

## 3.3 Thermal resistance

**Table 3 Thermal resistance**[1)]

| Parameter | Symbol | Values | | | Unit | Note or condition | Number |
|---|---|---|---|---|---|---|---|
| | | Min. | Typ. | Max. | | | |
| Junction to case | $R_{thJC}$ | – | – | 12.2 | K/W | – | P_4.3.1 |
| Junction to soldering point (pin) | $R_{thJSP}$ | 20.1 | – | 22.1 | K/W | JEDEC 2s2p, measured to pin 1, 3, 17, 18, 19, 21 | P_3.3.1 |
| Junction to soldering point (pin) | $R_{thJSP}$ | 34.9 | – | 37.6 | K/W | JEDEC 1s0p, measured to pin 1, 3, 17, 18, 19, 21 | P_3.3.2 |
| Junction to soldering point (soldering pad) | $R_{thJSP}$ | 11.0 | – | 14.7 | K/W | JEDEC 2s2p | P_3.3.3 |
| Junction to soldering point (soldering pad) | $R_{thJSP}$ | 13.1 | – | 18.0 | K/W | JEDEC 1s0p | P_4.3.2 |
| Junction to ambient | $R_{thJA}$ | – | 37 | – | K/W | [2)] | P_4.3.3 |

1) Not subject to production test, specified by design.
2) Specified $R_{thJA}$ value is according to JEDEC JESD51-2,-5,-7 at natural convection on FR4 2s2p board; the product (chip and package) was simulated on a 76.2 × 114.3 × 1.5 $mm^3$ board with two inner copper layers (2 × 70 µm Cu, 2 × 35 µm Cu). Where applicable, a thermal via array next to the package contacted the first inner copper layer.

***Note**: This thermal data was generated in accordance with JEDEC JESD51 standards. For more information refer to* www.jedec.org.



Downloaded from Arrow.com.

## 3.4 Quiescent current

**Table 4 Quiescent current**

$T_j$ = -40°C to 150°C; $V_{R1VSx}$ = 9 V to 25 V; unless otherwise specified

| Parameter | Symbol | Values | | | Unit | Note or condition | Number |
|---|---|---|---|---|---|---|---|
| | | Min. | Typ. | Max. | | | |
| ACTIVE state | $I_{q,OP}$ | – | – | 20 | mA | $T_j \leq 85°C$; $9\ V \leq V_{R1VSx} \leq 25\ V$; no load, watchdog disabled | P_3.4.1 |
| DISABLED state | $I_{q,DIS}$ | – | 13 | 17.5 | µA | $T_j \leq 85°C$; $9\ V \leq V_{R1VSx} \leq 25\ V$ | P_3.4.2 |
| DISABLED state | $I_{q,DIS}$ | – | 11 | 13.5 | µA | $T_j = 25°C$; $V_{R1VSx} = 13.5\ V$ | P_3.4.3 |
| FAULT state | $I_{q,FLT}$ | – | 1 | 2 | mA | $T_j \leq 85°C$; $9\ V \leq V_{R1VSx} \leq 25\ V$ | P_3.4.4 |
| LOCKED state | $I_{q,LCK}$ | – | 35 | 50 | µA | $T_j \leq 85°C$; $9\ V \leq V_{R1VSx} \leq 25\ V$ | P_3.4.5 |



Downloaded from Arrow.com.

## 3.5 Typical performance characteristics quiescent current

DISABLED state - quiescent current $I_q$ versus supply voltage $V_{R1VSx}$

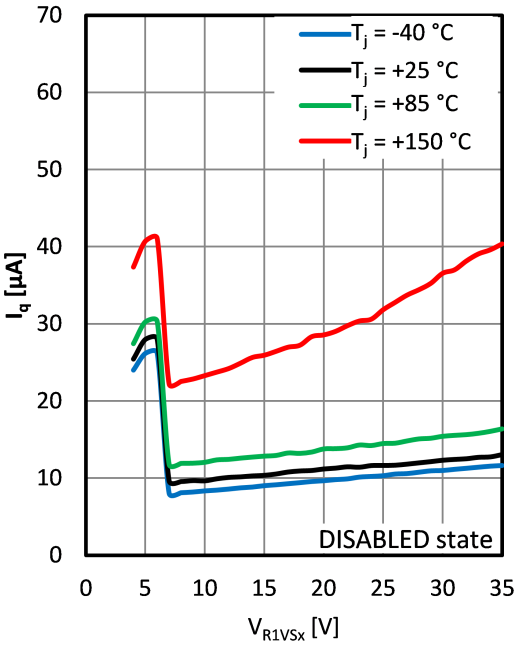


LOCKED state - quiescent current $I_q$ versus supply voltage $V_{R1VSx}$

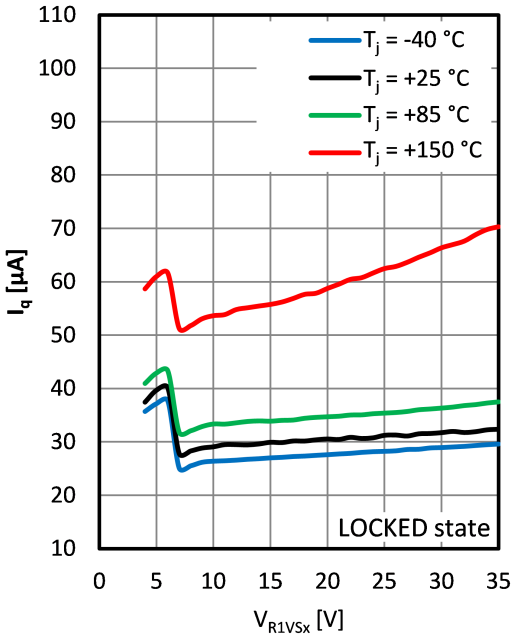




Downloaded from Arrow.com.

# 4 Power converters and power management

## 4.1 High voltage step-down regulator Buck1

### 4.1.1 Functional description Buck1

The high-voltage step-down regulator Buck1 converts the battery voltage R1VSx to the Buck1 voltage.

A synchronous, current-mode-controlled buck converter with internal power switches is integrated for this purpose. The output rail VBuck1 can be used as direct supply rail as well as pre-regulated rail for post-regulators.

An integrated driver circuit supplied by an external boot-strap capacitor drives the N-/N-MOS power stage. The integrated dead-time optimization prevents cross-conduction, minimizes dead-time and increases system efficiency. An internal voltage divider sets the output voltage. Internal compensation allows for fast loop performance across a wide range of output capacitance. No external tuning of the loop is required. The device supports ceramic capacitors as well as electrolytic capacitors. For detailed information on the selection of the external power stage components, such as the inductor and the filter capacitors for input and output, see Application information.

The converter offers various configuration options:

- Switching frequency selectable via SPI
- Synchronization of the switching frequency to other integrated converters as well as to an external synchronization signal
- Protection features that are designed to prevent damage to the converter due to fault conditions, such as:
  - Overcurrent detection
  - Overtemperature detection



Downloaded from Arrow.com.

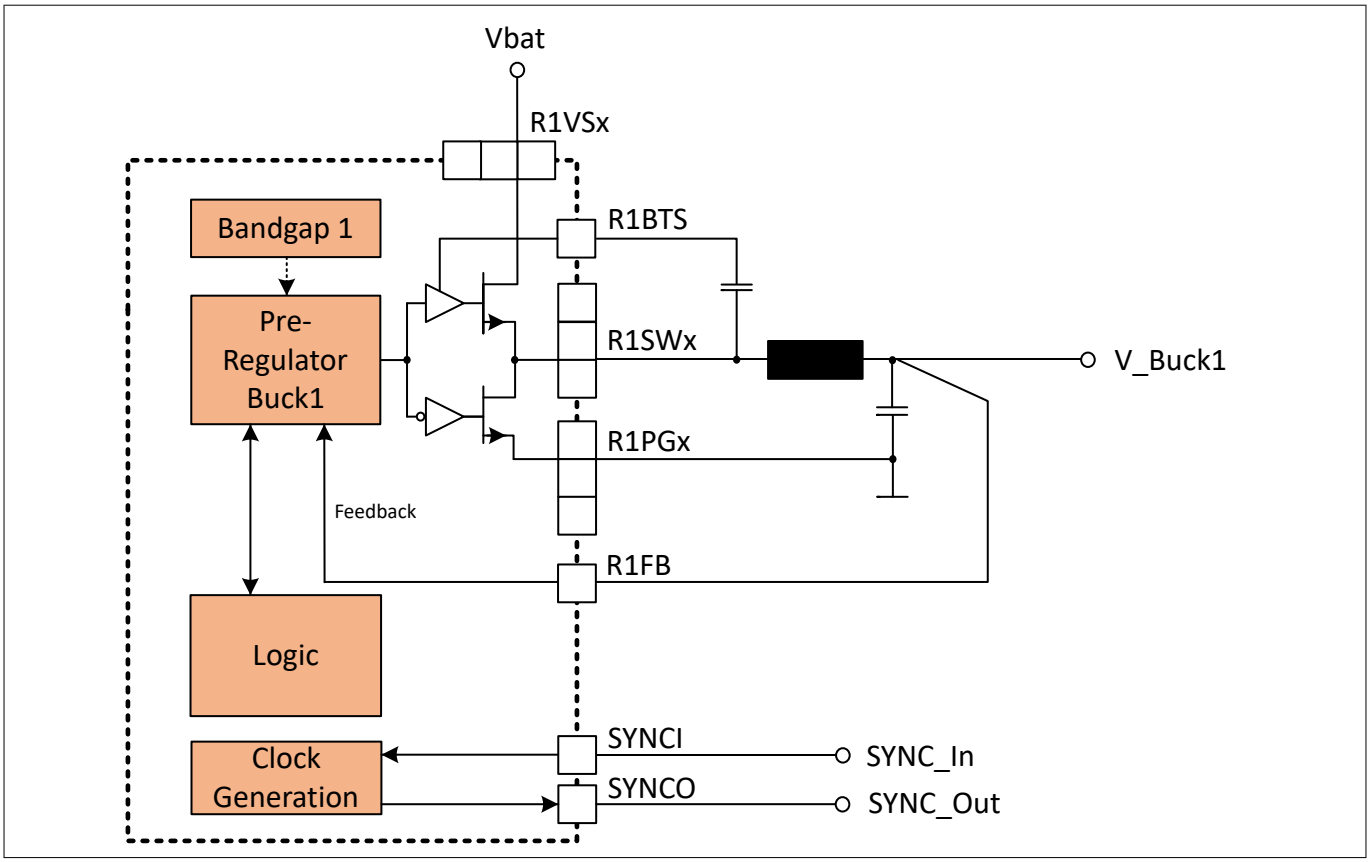


**Figure 3** **Functional block diagram Buck1**

### Modulation concept

The converter uses several modulation schemes, depending on the operation mode. It uses a PWM scheme in most of the operating area. It supports synchronization to internal and external clock sources. For light-load and high-line operation it uses pulse-skipping operation. This allows for an improved system efficiency and ensures a minimum turn-on time to ensure correct operation of the switches.

The converter handles the transition between PWM and pulse-skipping automatically, with the need to configure this. The current thresholds and voltage thresholds for this transition depend on the selected power stage components.

### Loop compensation

The converter uses a cascaded current-mode, voltage-mode control scheme. An inner loop controls the inductor current, while the external voltage compensation loop regulates the output voltage. The compensation loop can operate with a variety of power stages. For information on the selection of the external components see Application information. The dynamic performance of the system is a function of the power stage components and the internal compensation loop. To achieve optimum performance, follow the design considerations in Application information.

### Cycle-by-cycle current limitation

The device features cycle-by-cycle current limitation to protect the switches and external components in case of a fault condition. If the current reaches a defined current threshold, then the peak current monitoring turns off the high-side switch. The device also monitors the current in the low side switch. If the current in the low side switch exceeds the overcurrent threshold at the end of the switching period, then the device does not turn on the high side switch in the subsequent switching period. This allows the device to work as a constant current source.



Downloaded from Arrow.com.

If the current in the inductor exceeds the overcurrent protection threshold for a defined time $t_{R1OCP}$, then the device signalizes an overcurrent timeout event through an interrupt (OCSF1.BUCK1OCW). It is up to the application to decide how to react in this situation, for example by shutting down the converter.

### Overtemperature protection

The converter includes an overtemperature warning and shutdown function to protect the device against damage. If the junction temperature exceeds the overtemperature warning threshold, the device sets an overtemperature warning flag OTSF1.BUCK1OTW and it generates an interrupt. If the junction temperature continues to rise and exceeds the overtemperature shutdown threshold, then the converter shuts down and generates a thermal shut-down (TSD) event. It sets the OTSF0.BUCK1OT status flag, which the microcontroller can read after the device enters ACTIVE state again.

OTSTAT0.BUCK1OTW contains the current status of the overtemperature warning. OTSF1.BUCK1OTW contains the latched information.

### Soft start

The integrated soft start feature limits the inrush current and allows for a smooth startup of the converter. The device supports power-sequencing with the other output rails, see Power sequencing and soft start.



Downloaded from Arrow.com.

### 4.1.2 Electrical characteristics Buck1

**Table 5 Electrical characteristics Buck1**

$T_j$ = -40°C to 150°C; $V_{R1VSx}$ = 3.7 V to 35 V; all voltages with respect to ground, positive current flowing into pin (unless otherwise specified)

| Parameter | Symbol | Values | | | Unit | Note or condition | Number |
|---|---|---|---|---|---|---|---|
| | | Min. | Typ. | Max. | | | |
| Input voltage – TLF30682QVS01 | $V_{R1VSx}$ | 3.7 | 12 | 35 | V | $V_{R1FB}$ = 3.3 V | P_4.1.2.1 |
| Output voltage – TLF30682QVS01 | $V_{R1FB}$ | – | 3.3 | – | V | – | P_4.1.2.2 |
| Output voltage tolerance | $V_{R1FB,TOL}$ | -2 | – | +2 | % | – | P_4.1.2.9 |
| Maximum output current | $I_{R1IOUT}$ | 3.5 | – | – | A | 5.0 V ≤ $V_{R1VSx}$ ≤ 35 V | P_4.1.2.10 |
| Maximum output current – derated | $I_{R1IOUT,DR}$ | 2.0 | – | – | A | 3.7 V $V_{R1VSx}$ < 5.0 V | P_4.1.2.11 |
| High-side switch on-resistance | $R_{DSOn,R1HS}$ | 45 | 77 | 145 | mΩ | 5.0 V ≤ $V_{R1VSx}$ ≤ 35 V | P_4.1.2.16 |
| High-side switch on-resistance derated | $R_{DSOn,R1HS,DR}$ | – | – | 160 | mΩ | 3.7 V ≤ $V_{R1VSx}$ < 5.0 V | P_4.1.2.17 |
| Low-side switch on-resistance | $R_{DSOn,R1LS}$ | 35 | 72 | 135 | mΩ | 5.0 V ≤ $V_{R1VSx}$ ≤ 35 V | P_4.1.2.18 |
| Low-side switch on-resistance derated | $R_{DSOn,R1LS,DR}$ | – | – | 150 | mΩ | 3.7 V ≤ $V_{R1VSx}$ <5.0 V | P_4.1.2.19 |
| Overcurrent protection threshold | $I_{R1OCP}$ | 4.1 | 4.5 | 6.0 | A | – | P_4.1.2.21 |
| Overcurrent timeout | $t_{R1OCP}$ | 95 | 100 | 115 | µs | – | P_4.1.2.23 |
| Minimum on-time | $t_{R1SWx}$ | 50 | 58 | 72 | ns | Minimum on-time for internal high side control signal. The actual on-time on the R1SWx pins depends on the application design. | P_4.1.2.25 |
| Overtemperature warning threshold | $T_{j,R1OT,WRN}$ | 130 | 145 | 160 | °C | [1] $T_j$ increasing | P_4.1.2.26 |
| Overtemperature warning threshold | $T_{j,R1OT,WRN}$ | 120 | 135 | 150 | °C | [1] $T_j$ decreasing | P_4.1.2.27 |
| Overtemperature shutdown threshold | $T_{j,R1OT,FLT}$ | 175 | 190 | 205 | °C | [1] $T_j$ increasing | P_4.1.2.28 |
| Overtemperature shutdown threshold | $T_{j,R1OT,FLT}$ | 165 | 180 | 195 | °C | [1] $T_j$ decreasing | P_4.1.2.29 |
| Bootstrap capacitor | $C_{R1BST}$ | – | 100 | – | nF | – | P_4.1.2.30 |

**(table continues...)**



Downloaded from Arrow.com.

**Table 5 (continued) Electrical characteristics Buck1**

$T_j$ = -40°C to 150°C; $V_{R1VSx}$ = 3.7 V to 35 V; all voltages with respect to ground, positive current flowing into pin (unless otherwise specified)

| Parameter | Symbol | Values | | | Unit | Note or condition | Number |
|---|---|---|---|---|---|---|---|
| | | Min. | Typ. | Max. | | | |
| **External power stage components** | | | | | | | |
| Effective inductance | $L_{R1}$ | 2.64 | 3.3 | 4.0 | µH | 2) | P_4.1.2.33 |
| Effective output capacitance | $C_{R1}$ | 75 | 100 | 240 | µF | 2) 3) | P_4.1.2.35 |
| ESR of output capacitance | $R_{R1C}$ | 0 | 5 | 30 | mΩ | – | P_4.1.2.36 |

1) Not subject to production test, specified by design.
2) For additional information on the allowed L, C combinations see Application information.
3) Effective capacitance including derating over the temperature range, bias voltage and aging. Electrolytic capacitors as well as ceramic capacitors are supported.



Downloaded from Arrow.com.

### 4.1.3 Typical performance characteristics Buck1

Buck1 output voltage $V_{R1FB}$ versus load current $I_{R1IOUT}$

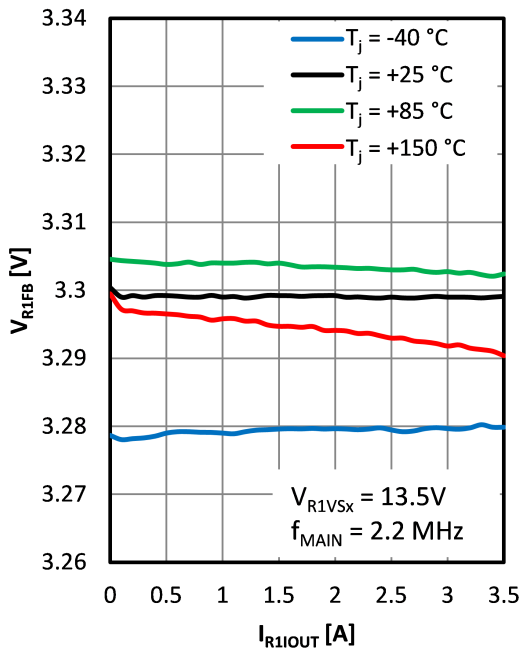


Buck1 output voltage $V_{R1FB}$ versus supply voltage $V_{R1VSx}$ (drop-out region)

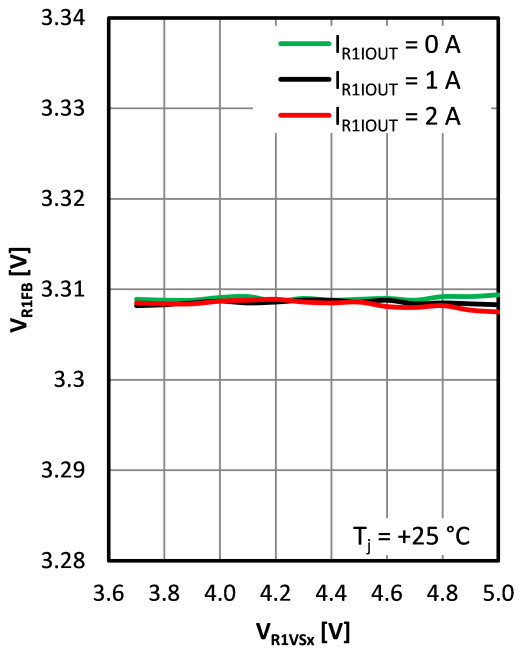




Downloaded from Arrow.com.

## 4.2 Post-regulator step-down converter Buck2

### 4.2.1 Functional description Buck2

The low-voltage step-down regulator Buck2 converts the output voltage of Buck1 to the VBuck2 voltage.

A synchronous, current-mode-controlled buck converter with internal P-/N-MOS power stage is integrated for this purpose. An internal voltage divider sets the output voltage. Internal compensation allows for fast loop performance across a wide range of output capacitance. No external tuning of the loop is required. The design supports ceramic capacitors as well as electrolytic capacitors. For detailed information on the selection of the external power stage components, such as the inductor and the filter capacitors for input and output, see Application information.

Synchronization of the switching frequency with the other integrated converters as well as an external synchronization signal is included. Various protection features, for example overcurrent detection, overtemperature detection and overvoltage detection, are designed to prevent damage to the converter due to fault conditions.

#### Loop compensation

The integrated loop compensation requires no external components. The dynamic performance of the system is a function of the power stage components and the internal compensation loop. To achieve optimum performance, follow the design considerations in Application information.

#### Cycle-by-cycle current limitation

The device features cycle-by-cycle current limitation to protect the switches and external components in case of fault condition. If the current reaches a defined threshold, then the peak current monitoring turns off the high-side switch. The device also monitors the current in the low side switch. If the current in the low side switch exceeds the overcurrent threshold at the end of the switching period, then the device does not turn on the high side switch in the subsequent switching period. This allows the device to work as a constant current source.

If this condition persists for a defined time, then the device signalizes an overcurrent timeout event $t_{R2OCP}$ through an interrupt OCSF1.BUCK2OCW. It is up to the application to decide how to react in this situation, for example by shutting down the converter.

#### Overtemperature protection

The converter includes an overtemperature warning and shutdown function to protect the device against damage. If the junction temperature exceeds the overtemperature warning threshold, then the device sets an overtemperature warning flag OTSF1.BUCK2OTW and it generates an interrupt. If the junction temperature continues to rise and exceeds the overtemperature shutdown threshold, then the converter shuts down and generates a thermal shut-down (TSD) event. The device sets the OTSF0.BUCK2OT status flag, which the microcontroller can read after the device enters ACTIVE state again.

OTSTAT0.BUCK2OTW contains the current status of the overtemperature warning. OTSF1.BUCK2OTW contains the latched information.

#### Output voltage adjustment via SPI

The device features output voltage adjustment via SPI. Therefore, the microcontroller can adjust the output voltage during ACTIVE state using the registers B2VCTRL, B2VCTRLN. Changes to the output voltage must be limited to 50 mV at a time. This means that the register values of B2VCTRL and B2VCTRLN must only be increased or decreased by steps of 1. This is important to avoid false triggering of a Buck2 UV or Buck2 OV event. The settling time of the output voltage for a 50 mV step is 50 µs typically, but it may be longer depending on the output filter selection and the load current condition.

#### Automatic use detection



Downloaded from Arrow.com.

The integrated automatic use detection for Buck2 allows the system to tell, whether the application uses Buck2. The device checks the input voltage on the R2VSx pins prior to startup of Buck2. If the pins are connected to the output voltage, then a voltage above the detection threshold is present at the pins and the device assumes that the application requires Buck2. HWDECT0.BUCK2AVA stores the result of the detection in order to allow the microcontroller to verify correct detection for the specific application and to differentiate the result from a possible fault present on the PCB.

To indicate to the device that the application does not require Buck2, connect the R2VSx pins to R2PGx.

### Soft start

The integrated soft start feature limits the inrush current and allows for a smooth startup of the converter. The device supports power-sequencing with the other output rails, see Power sequencing and soft start.



Downloaded from Arrow.com.

### 4.2.2 Electrical characteristics Buck2

**Table 6 Electrical characteristics Buck2**

$T_j$ = -40°C to 150°C; $V_{R1VSx}$ = 3.7 V to 35 V; all voltages with respect to ground, positive current flowing into pin (unless otherwise specified)

| Parameter | Symbol | Values | | | Unit | Note or condition | Number |
|---|---|---|---|---|---|---|---|
| | | Min. | Typ. | Max. | | | |
| Input voltage | $V_{R2VSx}$ | 2.9 | $V_{R1FB}$ | 4.0 | V | | P_4.2.2.1 |
| Output voltage adjustment range | $V_{R2FB,RANGE}$ | 0.9 | – | 1.3 | V | – | P_4.2.2.3 |
| Output voltage adjustment step size | $V_{R2FB,STEP}$ | – | 50 | – | mV | $V_{R2FB} = V_{R2FB,RANGE}$ | P_4.2.2.4 |
| Output voltage tolerance | $V_{R2FB,TOL}$ | -2 | – | +2 | % | – | P_4.2.2.10 |
| Maximum output current | $I_{R2IOUT}$ | 2.0 | – | – | A | – | P_4.2.2.11 |
| High-side switch on-resistance | $R_{DSOn,R2HS}$ | 60 | 113 | 180 | mΩ | $V_{R2VSx}$ = 3.3 V | P_4.2.2.15 |
| Low-side switch on-resistance | $R_{DSOn,R2LS}$ | 35 | 80 | 140 | mΩ | $V_{R2VSx}$ = 3.3 V | P_4.2.2.16 |
| Overcurrent protection threshold | $I_{R2,OCP}$ | 2.9 | 3.45 | 4.0 | A | – | P_4.2.2.18 |
| Overcurrent timeout | $t_{R2,OCP}$ | 95 | 100 | 115 | µs | – | P_4.2.2.20 |
| Minimum on-time | $t_{R2SWx}$ | 64 | 79 | 87 | ns | Minimum on-time for internal high side control signal. The actual on-time on the R2SWx pins depends on the application design. | P_4.2.2.22 |
| Overtemperature warning threshold | $T_{j,R2OT,WRN}$ | 130 | 145 | 160 | °C | 1) $T_j$ increasing | P_4.2.2.23 |
| Overtemperature warning threshold | $T_{j,R2OT,WRN}$ | 120 | 135 | 150 | °C | 1) $T_j$ decreasing | P_4.2.2.24 |
| Overtemperature shutdown threshold | $T_{j,R2OT,FLT}$ | 175 | 190 | 205 | °C | 1) $T_j$ increasing | P_4.2.2.25 |
| Overtemperature shutdown threshold | $T_{j,R2OT,FLT}$ | 165 | 180 | 195 | °C | 1) $T_j$ decreasing | P_4.2.2.26 |
| **External power stage components** | | | | | | | |
| Effective inductance | $L_{R2}$ | 1.2 | 2.2 | 4.0 | µH | 2) | P_4.2.2.28 |
| Effective output capacitance | $C_{R2}$ | 52 | 66 | 120 | µF | 2) 3) | P_4.2.2.30 |
| ESR of output capacitance | $R_{R2C}$ | 0 | 5 | 30 | mΩ | – | P_4.2.2.31 |

1) Not subject to production test, specified by design.
2) For additional information on the allowed L, C combinations see Application information.



Downloaded from Arrow.com.

*3)* Effective capacitance including derating over the temperature range, bias voltage and aging. Electrolytic capacitors as well as ceramic capacitors are supported.



Downloaded from Arrow.com.

### 4.2.3 Typical performance characteristics Buck2

Buck2 output voltage $V_{R2FB}$ versus
load current $I_{R2IOUT}$

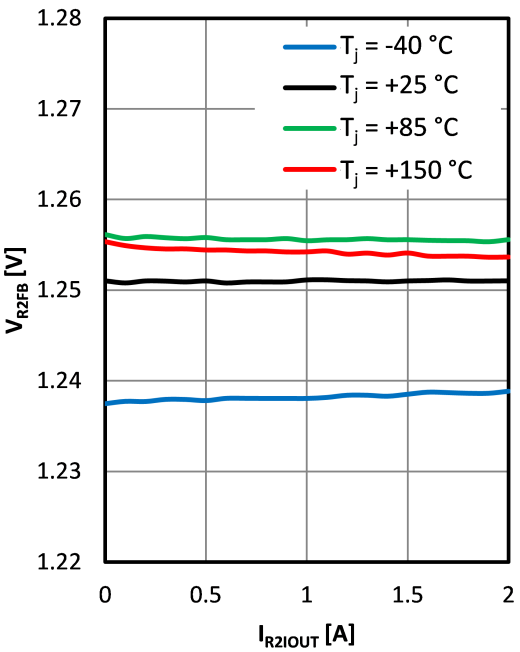




Downloaded from Arrow.com.

## 4.3 Post-regulator step-up converter Boost1

### 4.3.1 Functional description Boost1

The device integrates a dedicated step-up converter to generate a 5 V output voltage rail from the Buck1 voltage. The converter uses an asynchronous boost topology with internal low-side switch and an external diode.

Synchronization of the switching frequency with the other integrated converters as well as an external synchronization signal is included.

#### Loop compensation

The integrated loop compensation requires no external components. For information on the selection of the external components see Application information.

#### Overcurrent protection

The integrated overcurrent protection is designed to protect the internal low-side switch of the boost converter. Due to the nature of the boost topology the boost output rail is not protected against a short circuit directly. However, indirect protection via an undervoltage protection and current limitation of the front-end converter Buck1 is available.

#### Automatic use detection

The integrated automatic use detection allows the system to tell, whether the application uses Boost1. The device checks the input voltage on the R3FB pin prior to startup of Boost1. If the R3FB pin is connected to the output voltage of Buck1 through the boost inductor and rectifying diode, then a voltage above the detection threshold is present at the pin and the device assumes that the application requires Boost1. HWDECT0.BOOST1AVA stores the result of the detection in order to allow the microcontroller to verify correct detection for the specific application and differentiate the result from a possible fault present on the PCB.

To indicate to the device that the application does not require Boost1, connect the R3FB pin to R3PG.



Downloaded from Arrow.com.

### 4.3.2 Electrical characteristics Boost1

**Table 7 Electrical characteristics Boost1**

$T_j$ = -40°C to 150°C; $V_{R1VSx}$ = 3.7 V to 35 V; all voltages with respect to ground, positive current flowing into pin (unless otherwise specified)

| Parameter | Symbol | Values | | | Unit | Note or condition | Number |
|---|---|---|---|---|---|---|---|
| | | Min. | Typ. | Max. | | | |
| Input voltage | $V_{R3VS}$ | 2.7 | $V_{R1FB}$ | 4.5 | V | – | P_4.3.2.1 |
| Output voltage | $V_{R3FB}$ | – | 5.0 | – | V | – | P_4.3.2.2 |
| Output voltage tolerance | $V_{R3FB,TOL}$ | -2 | – | 2 | % | – | P_4.3.2.3 |
| Maximum output current | $I_{R3IOUT}$ | 250 | – | – | mA | – | P_4.3.2.4 |
| Overcurrent detection threshold | $I_{R3,OCP}$ | 740 | 820 | 900 | mA | – | P_4.3.2.5 |
| Overcurrent timeout | $t_{R3,OCP}$ | 170 | 220 | 260 | µs | – | P_4.3.2.6 |
| **External power stage components** | | | | | | | |
| Effective inductance | $L_{R3}$ | 3.8 | 6.8 | 9.8 | µH | 1) | P_4.3.2.8 |
| Effective output capacitance | $C_{R3}$ | 5.5 | 10 | 18 | µF | 1) 2) | P_4.3.2.10 |
| ESR of output capacitance | $R_{R3C}$ | 1 | 20 | 50 | mΩ | – | P_4.3.2.11 |

1) For additional information on the allowed L, C combinations see Application information.
2) Effective capacitance including derating over the temperature range, bias voltage and aging. Electrolytic capacitors as well as ceramic capacitors are supported.


Downloaded from Arrow.com.

### 4.3.3 Typical performance characteristics Boost1

Boost1 output voltage $V_{R3FB}$ versus
load current $I_{R3IOUT}$

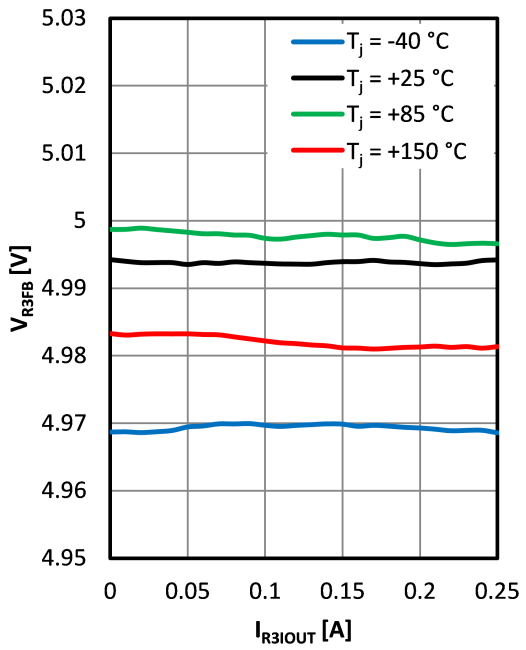




Downloaded from Arrow.com.

## 4.4 Support of external voltage rails

The device supports monitoring of two externally generated voltage rails via voltage monitors. Each voltage monitor consists of an enable pin VMxEN to control the respective regulator and a monitoring input pin VMxFB to monitor the respective voltage rail. The expected voltage on the monitoring input is fixed. If higher voltages is to be monitored, an external voltage divider may be used to reduce the voltage to the expected range.

### Automatic use detection

The integrated automatic use detection for each voltage monitor allows the system to tell, whether the application uses it.

If the device can drive the respective enable pin "high", then it device assumes that an external power regulator is connected and that the voltage monitoring is used. HWDECT0.VM1AVA and HWDECT0.VM2AVA store the result of the detection, respectively, in order to allow the microcontroller to verify correct detection for the specific application and differentiate the result from a possible fault condition on the PCB.

To indicate to the device that the application does not require a voltage monitor, connect the respective enable pin VMxEN to ground.

## 4.4.1 Electrical characteristics support of external voltage rails

**Table 8 Electrical characteristics external voltage rails**

$T_j$ = -40°C to 150°C, $V_{R1VSx}$ = 9 V to 25 V all voltages with respect to ground, positive current flowing into pin (unless otherwise specified)

| Parameter | Symbol | Values | | | Unit | Note or condition | Number |
|---|---|---|---|---|---|---|---|
| | | Min. | Typ. | Max. | | | |
| **Enable signal VMxEN** | | | | | | | |
| Output level – "high" | $V_{VMxEN,high}$ | 0.7 | – | – | $V_{IOVDD}$ | $I_{VMxEN}$ = -7 mA | P_4.4.0.1 |
| Output level – "low" | $V_{VMxEN,low}$ | – | – | 0.7 | V | $I_{VMxEN}$ = -5.5 mA | P_4.4.0.2 |
| Internal pull-down current | $I_{VMxEN}$ | 10 | – | – | µA | $V_{VMxEN}$ = 0.8 V | P_4.4.0.3 |
| **Monitoring signals VMxFB** | | | | | | | |
| Nominal input voltage | $V_{VMxFB,nom}$ | – | 0.8 | – | V | 1) | P_4.4.0.4 |
| Input pull-up current | $I_{VMxFB}$ | – | 100 | 130 | nA | $V_{VMxFB}$ = 0.8 V | P_4.4.0.5 |

1) For information on the monitoring thresholds please refer to Table 14 in Monitoring of external voltage rails.



Downloaded from Arrow.com.

# 5 Central functions

## 5.1 Supply voltages

The device generates an internal supply voltage from the voltage supplied at the R1VSx pins. This supply voltage R1BTSV power the driver circuit for the power switches of Buck1. R1BTSV cannot be used to supply any external load.

A ceramic capacitor for decoupling must be placed between R1BTSV and the respective ground pin in order to handle the dynamic gate drive current of the power switches.

A supply voltage is required at the IOVDD pin in order to operate the digital outputs of the device, see Microcontroller interface supply IOVDD pin.

### 5.1.1 Electrical characteristics supply voltages

**Table 9 Electrical characteristics supply voltages**

$T_j$ = -40°C to 150°C; $V_{R1VSx}$ = 3.7 V to 35 V; all voltages with respect to ground, positive current flowing into pin (unless otherwise specified)

| Parameter | Symbol | Values | | | Unit | Note or condition | Number |
|---|---|---|---|---|---|---|---|
| | | Min. | Typ. | Max. | | | |
| **Decoupling capacitor for internal supply** | | | | | | | |
| Internal supply decoupling – connect between R1BTSV and GND | $C_{R1BTSV}$ | 0.8 | 1.0 | 1.2 | µF | – | P_5.1.1 |



Downloaded from Arrow.com.

## 5.2 Enable functionality

The device features an enable functionality which allows powering up the device using the ENA pin. For example, the ENA pin can be connected to the outside of the ECU or to a wake output of a CAN transceiver.

The ENA pin is level-sensitive with a duration-based deglitching. "High" indicates the enabled state. If the voltage at the ENA pin is above the enable detection threshold $V_{ENA,high}$ for a minimum time of $t_{ENA,det}$, then the device considers the enable signal "high", see Figure 4. A signal above the detection threshold for a duration shorter than $t_{ENA,filt}$ is not a valid "high" signal.

If the voltage at the ENA pin is below $V_{ENA,low}$ for a minimum time of $t_{ENA,det}$, then the device considers the enable signal "low". A signal below the detection threshold for a duration shorter than $t_{ENA,filt}$ is not a valid "low" signal.

The device incorporates an enable event detection, where a "low" to "high" transition or a "high" to "low" transition of the enable signal is considered an enable event. Upon detection of an enable event the device generates an interrupt SYSSF1-QM.ENA. Depending on the device state, an enable event can trigger a state transition (see State transitions and trigger signals), for example to power up the device.

An enable event does not disable the device automatically. It is up to the microcontroller to react to the generated interrupt and react accordingly.

VMONSTAT0.ENA stores the state of the enable signal, which the microcontroller can use to determine the current state of the enable signal. This information can be used to differentiate between an enable or disable condition on ECU level.

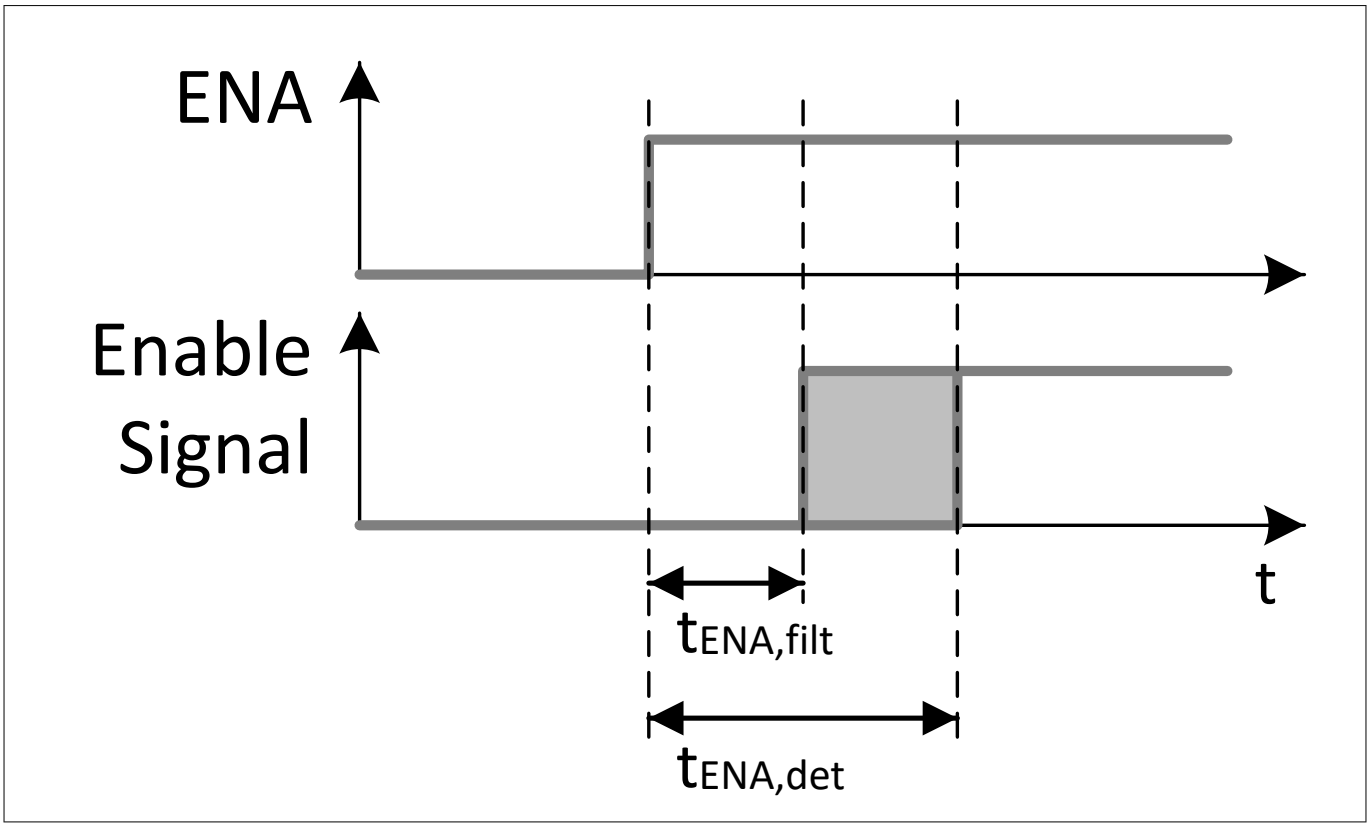


**Figure 4** **Enable signal – enable event timing**

### 5.2.1 ENA pin configurability

The functionality of the ENA pin can be configured by the microcontroller as edge-triggered or level-sensitive in register DEVCFG0.ENA_CONFIG.



Downloaded from Arrow.com.

The ENA pin is by default configured to be edge triggered. The device can then only detect an ENA event, if the voltage on the pin rises from "low" to "high".

If the configuration of the ENA pin is set to level-sensitive, then the device automatically re-enters the ACTIVE state from any state if the ENA pin is "high". This means that the device automatically returns to ACTIVE state after a HARD reset event or after entering a LOCKED state with the ENA pin configured to level-sensitive as long as the ENA pin is "high".

The ENA pin must be "low" as a prerequisite for the device to enter DISABLED state from ACTIVE state. If the device enters the DISABLED state on an SPI request to DEVCTRL/DEVCTRLN, then the device resets the DEVCFG0 register to the default value. The device can therefore only recognize an ENA event in DISABLED state if the ENA pin has a "low" to "high" transition.

## 5.2.2 Electrical characteristics enable

**Table 10 Electrical characteristics enable**

$T_j$ = -40°C to 150°C; $V_{R1VSx}$ = 3.7 V to 35 V; all voltages with respect to ground, positive current flowing into pin (unless otherwise specified)

| Parameter | Symbol | Values | | | Unit | Note or condition | Number |
|---|---|---|---|---|---|---|---|
| | | Min. | Typ. | Max. | | | |
| **Enable signal ENA** | | | | | | | |
| Input voltage "high" | $V_{ENA,high}$ | 1.30 | 1.60 | 2.00 | V | $V_{ENA}$ increasing | P_5.2.1 |
| Input voltage "low" | $V_{ENA,low}$ | 1.00 | 1.20 | 1.40 | V | $V_{ENA}$ decreasing | P_5.2.2 |
| Input voltage hysteresis | $V_{ENA,hys}$ | 250 | 400 | 550 | mV | – | P_5.2.3 |
| Input current "high" | $I_{ENA,high}$ | – | 3 | 5 | µA | $V_{ENA} \geq 2$ V | P_5.2.4 |
| Input current "low" | $I_{ENA,low}$ | – | – | 0.1 | µA | $V_{ENA} \leq 1$ V | P_5.2.5 |
| Enable signal, filtering time | $t_{ENA,filt}$ | – | – | 20 | µs | – | P_5.2.6 |
| Enable signal, detection time | $t_{ENA,det}$ | 40 | – | – | µs | – | P_5.2.7 |



Downloaded from Arrow.com.

### 5.2.3 Typical performance characteristics enable

ENA pin input voltage thresholds $V_{ENA}$ versus junction temperature $T_j$

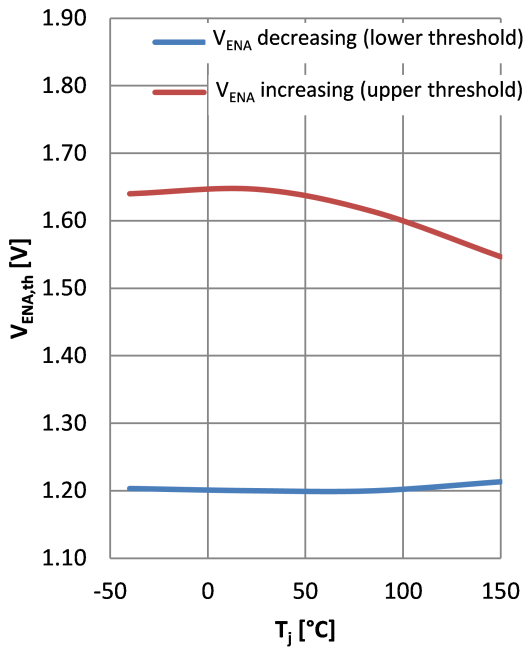




Downloaded from Arrow.com.

## 5.3 Power sequencing and soft start

The individual output rails are power sequenced to reduce the inrush current during power-up. The device uses a passive power sequencing method where it enables the individual rails when the preceding rail is within its total operating band, that is between the respective undervoltage and overvoltage fault thresholds.

Sequence of the output rails:

- Buck1
- Buck2, Boost1
- (VM1), (VM2)

Power sequencing is active any time a power rail is enabled or disabled, for example at the transition to ACTIVE.

If the device detects via the automatic use detection that a rail is not active, then power sequencing skips this rail and proceeds with the subsequent rail.

The following conditions must be fulfilled for the power sequence to proceed with the next stage:

- The output voltage on the individual rails must be above the undervoltage threshold
- The rise time must be completed before the next stage is reached

For example, during ramp-up of Buck1 the device waits until its output voltage exceeds the undervoltage threshold and until the rise time $t_{Buck1}$ has elapsed before it initiates the ramping of Buck2 and Boost1. Under normal operating conditions the output voltage on Buck1, Buck2 and Boost1 cross their respective undervoltage thresholds before the rise time has elapsed.

As soon as the device enables a rail, it also enables the corresponding undervoltage monitoring. However, the device only indicates an undervoltage event once, when the voltage rail crosses the undervoltage threshold for the first time. The short-to-ground detection is active and the device uses it as a timeout function for the power sequencing process. If a voltage rail is not valid within the short-to-ground detection time, then the device indicates a fault event. Depending on the configured response to the short-to-ground event (see Table 25), the device may either move into a different state or continue operation and power sequencing.



Downloaded from Arrow.com.

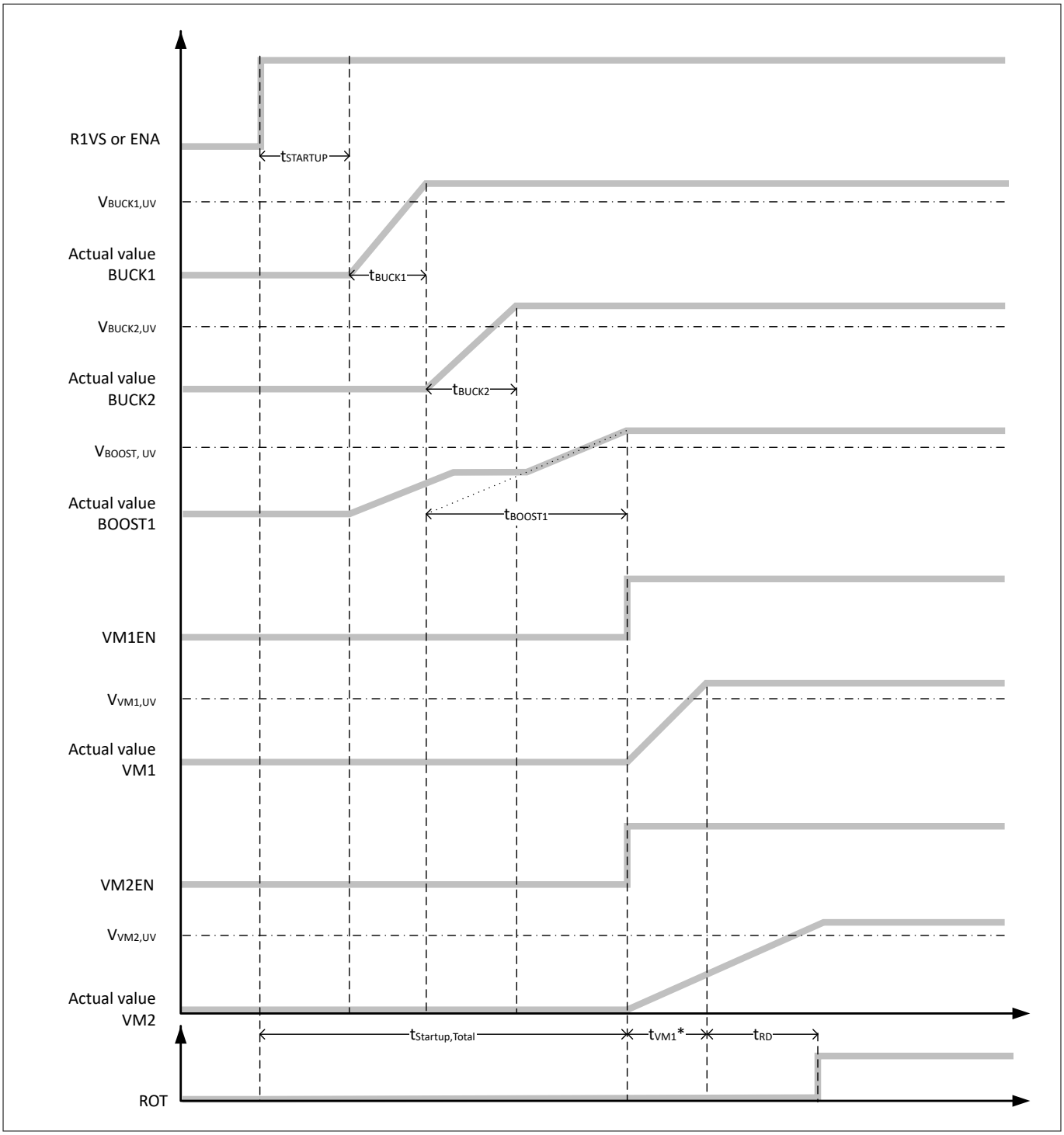


**Figure 5 Power sequencing**

The device releases the microcontroller reset signal with a configurable delay once the microcontroller supply voltage is within the operating band for a selectable time period DEVCFG0.RESDEL. For generation of the microcontroller reset signal (ROT) see Reset generation (ROT signal).

The external voltage regulator monitored by VM1 must have a rise time, $t_{VM1}$, that is shorter than the short-to-ground detection time, $t_{VM1,StG}$, see Table 14.



Downloaded from Arrow.com.

### 5.3.1 Electrical characteristics power sequencing and soft start

**Table 11 Electrical characteristics power sequencing and soft start**

$T_j$ = -40°C to 150°C; $V_{R1VSx}$ = 3.7 V to 35 V; all voltages with respect to ground, positive current flowing into pin (unless otherwise specified)

| Parameter | Symbol | Values | | | Unit | Note or condition | Number |
|---|---|---|---|---|---|---|---|
| | | Min. | Typ. | Max. | | | |
| Internal device startup time | $t_{STARTUP}$ | – | 300 | – | µs | – | P_5.3.1 |
| Output voltage rise time Buck1 | $t_{BUCK1}$ | – | 320 | – | µs | $V_{BUCK1}$ = 3.3 V | P_5.3.2 |
| Output voltage rise time Buck2 | $t_{BUCK2}$ | – | 320 | – | µs | $V_{BUCK2}$ = 1.25 V | P_5.3.4 |
| Output voltage rise time Boost1 | $t_{BOOST1}$ | – | 640 | – | µs | $V_{BUCK1}$ = 3.3 V, $V_{BOOST1}$ = 5.0 V | P_5.3.5 |



Downloaded from Arrow.com.

## 5.4 Frequency generation and clock synchronization

The integrated clock generation and a clock manager generate the switching frequencies for the integrated converters. The device support synchronization to an external clock signal as well as generation of the synchronization signal for external circuits. All all converters support spread spectrum modulation for improved EMC and EMI.

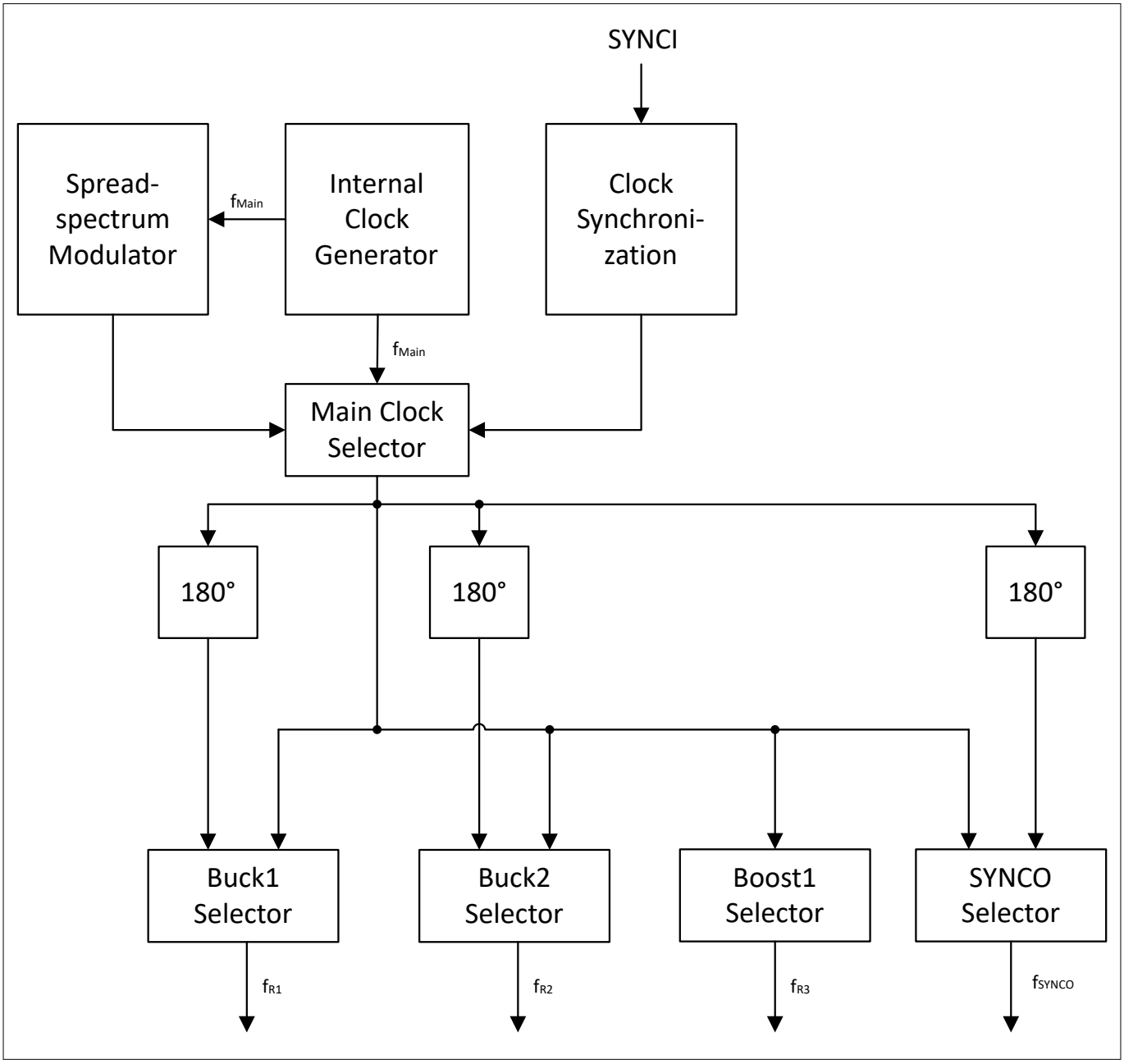


**Figure 6 Clock generation and clock manager**

### Main frequency generation

Figure 6 shows that the internal clock generation uses an internal main frequency to derive the switching frequency for the power converters and the external synchronization signal. CLKCFG1 allows to adjust the main frequency of the system within a given range.



Downloaded from Arrow.com.

### Synchronization

The power converters can be synchronized to an external clock signal (SYNCI) to improve EMC and EMI performance and to reduce cross-talk to the loads.

Table 12 shows the specification of the signal. The clock manager synchronizes the switching frequency to this signal according to the configuration in the SPI registers. The synchronization functionality is disabled by default.

To enable synchronization of the switching frequency, an external reference signal is required at the SYNCI pin and the synchronization functionality must be enabled via SPI. The external clock source must not be removed while the device is running in synchronized mode.

The device supports a dynamic change of the synchronization frequency during synchronization mode with minimal disturbance of the output voltage. It is recommended to keep the same phase and change the switching frequency with the next rising edge of the synchronization signal to minimize the impact on the output voltage. The output voltage settles within a maximum time of 50 µs.

The synchronization output signal SYNCO can be used to synchronize an external switched-mode post-regulator to the device. The output frequency is equal to the switching frequency of Buck1. The synchronization signal has a 50% duty cycle with a selectable phase shift of 0° or 180° with respect to the main clock. The synchronization output is disabled by default. The synchronization output can be enabled via SPI.

CLKCFG0 allows to adjust the phase shift between the individual converters. The phase shift is defined between rising edge of the clock signal and the rising edge of the switch node for the buck converters and the falling edge of the boost converter respectively. Furthermore the converters Buck1 and Buck2, as well as SYNCO can be controlled independently with a phase shift of 0° or 180° with respect to the main clock.

### Spread spectrum

The device incorporates spread spectrum in order to improve EMC and EMI performance. Spread spectrum is applied to the main clock source, so it supports all power converters. Spread spectrum is disabled by default. CLKCFG0.SSEN allows to enable spread spectrum.

## 5.4.1 Electrical characteristics frequency generation and clock synchronization

**Table 12 Electrical characteristics frequency generation and clock synchronization**

$T_j$ = -40°C to 150°C; $V_{R1VSx}$ = 3.7 V to 35 V; all voltages with respect to ground, positive current flowing into pin (unless otherwise specified)

| Parameter | Symbol | Values | | | Unit | Note or condition | Number |
|---|---|---|---|---|---|---|---|
| | | Min. | Typ. | Max. | | | |
| **Internal clock source** | | | | | | | |
| Frequency | $f_{MAIN}$ | 1800 | 2200 | 2500 | kHz | Switching frequency selectable via SPI | P_5.4.1 |
| Frequency tolerance | $f_{MAIN,tol}$ | -10 | – | 10 | % | – | P_5.4.3 |
| Frequency adjustment step size | $f_{MAIN,step}$ | – | 100 | – | kHz | – | P_5.4.4 |
| **Synchronization input signal SYNCI**[1)] | | | | | | | |
| Input level "high" | $V_{SYNCI, high}$ | 0.7 | – | – | $V_{IOVDD}$ | $V_{SYNCI}$ increasing | P_5.4.5 |
| Input level "low" | $V_{SYNCI, low}$ | – | – | 0.8 | V | $V_{SYNCI}$ decreasing | P_5.4.6 |

**(table continues...)**



Downloaded from Arrow.com.

**Table 12 (continued) Electrical characteristics frequency generation and clock synchronization**

$T_j$ = -40°C to 150°C; $V_{R1VSx}$ = 3.7 V to 35 V; all voltages with respect to ground, positive current flowing into pin (unless otherwise specified)

| Parameter | Symbol | Values | | | Unit | Note or condition | Number |
|---|---|---|---|---|---|---|---|
| | | Min. | Typ. | Max. | | | |
| Input level hysteresis | $V_{SYNCI, hys}$ | – | 0.06 | – | $V_{IOVDD}$ | – | P_5.4.7 |
| Input capacitance | $C_{SYNCI}$ | – | 4 | 15 | pF | 2) | P_5.4.8 |
| Frequency range | $f_{Sync}$ | 1600 | 2200 | 2800 | kHz | – | P_5.4.9 |
| Duty cycle | | 40 | 50 | 60 | % | – | P_5.4.10 |
| Phase delay between SYNCIN and switching edges | | – | 30 | – | ns | – | P_5.4.11 |
| Output voltage settling time | $t_{Sync}$ | – | – | 50 | µs | – | P_5.4.12 |
| **Synchronization output signal SYNCO**[1] | | | | | | | |
| Output level "high" | $V_{SYNCO, high}$ | 0.7 | – | – | $V_{IOVDD}$ | $I_{IOVDD}$ = -7 mA | P_5.4.13 |
| Output level "low" | $V_{SYNCO, low}$ | – | – | 0.7 | V | $I_{IOVDD}$ = -5.5 mA | P_5.4.14 |
| Frequency | | – | $f_{MAIN}$ | – | | – | P_5.4.15 |
| Duty cycle | | – | 50 | – | % | – | P_5.4.16 |
| **Spread spectrum modulation** | | | | | | | |
| Maximum modulation variation from $f_{MAIN,Range}$ | | -7.5 | – | 7.5 | % | 5 steps | P_5.4.22 |
| Modulation frequency | | – | 9 | – | kHz | – | P_5.4.23 |

1) The voltage levels on this pin depend on the IOVDD supply voltage provided (see Microcontroller interface supply IOVDD pin).
2) Not subject to production test, specified by design.



Downloaded from Arrow.com.

### 5.4.2 Typical performance characteristics frequency generation

Switching frequency $f_{MAIN}$ versus junction temperature $T_j$

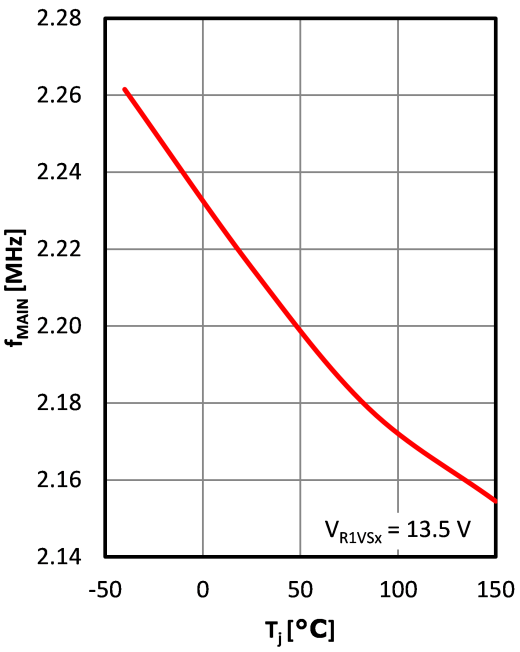




Downloaded from Arrow.com.

## 5.5 IOVDD - overvoltage detection and undervoltage detection

The IOVDD pin is the supply voltage input for the communication interface towards the microcontroller. The pin can be supplied from one of the voltages generated by the TLF30682QVS01.

The TLF30682QVS01 monitors the voltage on the IOVDD pin. An overvoltage event or an undervoltage event triggers a reset and pulls ROT to GND. As long as no reset event occurs, ROT is "high" ($V_{IOVDD}$) due to an internal pull-up resistor and follows $V_{IOVDD}$. Figure 7 shows an example of various events with delay and deglitching times.

In addition the TLF30682QVS01 also features a short-to-ground detection for the IOVDD voltage. If the IOVDD voltage is below the undervoltage threshold for a period longer the short-to-ground detection time, then the device generates a short-to-ground event. A short-to-ground event on IOVDD triggers a hard reset in the device and the SYSSF0-QM.IOVDDUV.

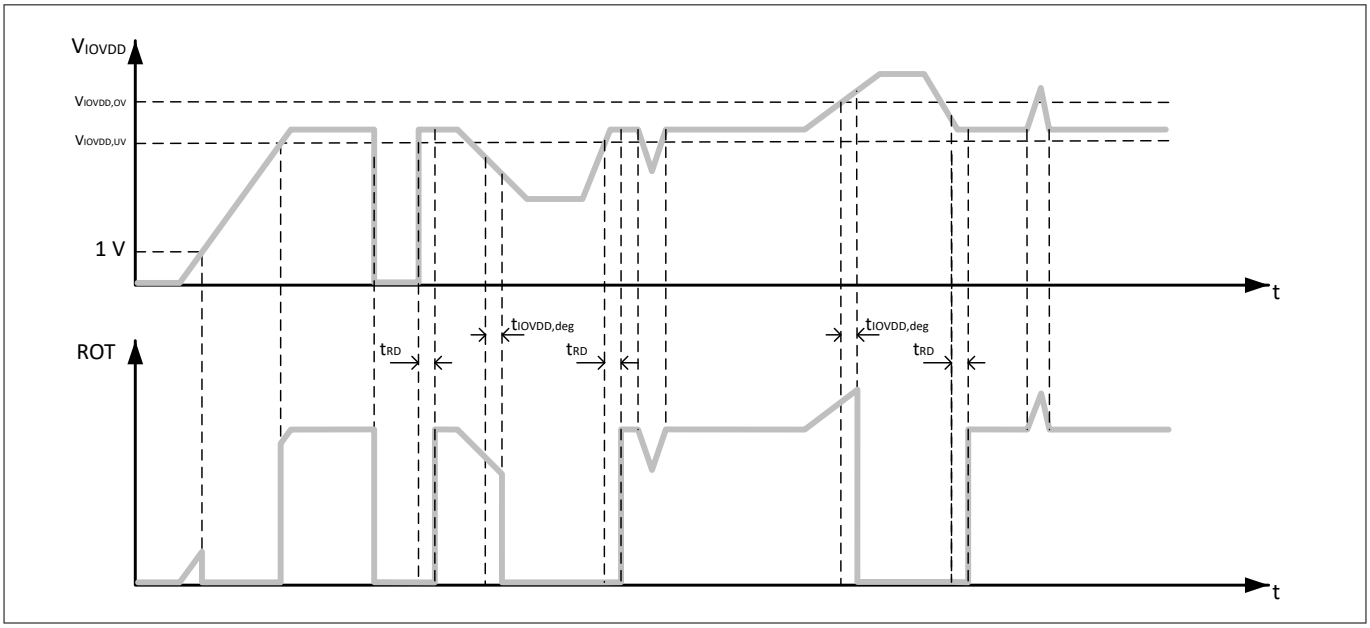


**Figure 7** **Overvoltage detection and undervoltage detection**

### 5.5.1 Electrical characteristics IOVDD - overvoltage detection and undervoltage detection

**Table 13** **Electrical characteristics IOVDD - overvoltage detection and undervoltage detection**

$T_j$ = -40°C to 150°C; $V_{R1VSx}$ = 3.7 V to 35 V; all voltages with respect to ground, positive current flowing into pin (unless otherwise specified)

| Parameter | Symbol | Values | | | Unit | Note or condition | Number |
|---|---|---|---|---|---|---|---|
| | | Min. | Typ. | Max. | | | |
| IOVDD - overvoltage threshold | $V_{IOVDD,OV}$ | 5.5 | – | 5.8 | V | – | P_5.6.1 |
| IOVDD - overvoltage hysteresis | $V_{IOVDD,OV,Hys}$ | 0.4 | – | 2.25 | % | – | P_5.6.2 |
| IOVDD - undervoltage threshold | $V_{IOVDD,UV}$ | 2.74 | – | 2.86 | V | – | P_5.6.3 |

**(table continues...)**



Downloaded from Arrow.com.

**Table 13 (continued) Electrical characteristics IOVDD - overvoltage detection and undervoltage detection**

$T_j$ = -40°C to 150°C; $V_{R1VSx}$ = 3.7 V to 35 V; all voltages with respect to ground, positive current flowing into pin (unless otherwise specified)

| Parameter | Symbol | Values | | | Unit | Note or condition | Number |
|---|---|---|---|---|---|---|---|
| | | Min. | Typ. | Max. | | | |
| IOVDD - undervoltage hysteresis | $V_{IOVDD,UV,Hys}$ | 0.4 | – | 2.25 | % | – | P_5.6.4 |
| Deglitching time | $t_{IOVDD,deg}$ | 8 | – | 20 | µs | – | P_5.6.5 |
| Short-to-ground detection time | $t_{IOVDD,StG}$ | 3.6 | 4.0 | 4.4 | ms | – | P_5.6.6 |



Downloaded from Arrow.com.

# 6 Monitoring functions

The device incorporates various features for using the device as a supply backbone:

- Integrated voltage monitors for the output voltages, see Voltage monitoring
- Integrated window watchdog for supervising microcontroller timing, see Window watchdog

## 6.1 Voltage monitoring

### 6.1.1 Monitoring of R1VSx battery supply

If the battery voltage drops below $V_{R1VSx,UV}$, then the undervoltage monitoring feature for R1VSx sets the SPI status flag GSF.R1VSxUV.

### 6.1.2 Monitoring of output voltages

The voltage monitoring function supervises the voltages on the feedback pins R1FB, R2FB and R3FB of the switched-mode converters with respect to the thresholds for undervoltage and overvoltage, see Table 14.

The device does not detect a signal as a fault event, which crosses the respective thresholds for a time shorter than the deglitching time. When a signal crosses a threshold for a duration longer than the deglitching time, then the device generates an undervoltage event or an overvoltage event. If the voltage is below the undervoltage threshold for a duration longer than the short-to-ground detection time, then the device generates a short-to-ground event in addition. The monitoring also features deep undervoltage detection for Buck1 and Buck2. If the voltage on the feedback pins R1FB or R2FB drops below the deep undervoltage threshold for a duration longer than the deglitching time, then the device generates a short-to-ground event.

Depending on the type of fault, the device executes appropriate according actions, see State transitions and trigger signals.

When the device enables a power rail, it activates the respective voltage monitoring automatically. For information on the behavior during power sequencing see Power sequencing and soft start.

### 6.1.3 Monitoring of external voltage rails

The device supports monitoring of two external voltage rails on the pins VM1FB, VM2FB. The device compares external voltages using window comparators against predefined thresholds. These thresholds define levels relative to the assumed nominal input voltage, see Table 14. Resistor dividers are to be used to map the output voltage of the respective voltage rail externally.

Signals crossing the thresholds for a time shorter than the deglitching time are not detected as a fault event. When a signal crosses a threshold for a duration longer than the deglitching time, then the device generates an undervoltage event or an overvoltage event. If the voltage is below the undervoltage threshold for a duration longer than the short-to-ground detection time, then the device generates a short-to-ground event in addition.

Depending on the type of fault, the device executes appropriate according actions, see State transitions and trigger signals.

When the device enables a power rail, it activates the respective voltage monitoring automatically. For information on the behavior during power sequencing see Power sequencing and soft start.

If an overvoltage event or a short-to-ground event occurs, then the device shuts down the respective voltage rail to protect the load and the device.

### 6.1.4 Monitoring of internal supply voltages and bandgaps

The integrated voltage monitoring function monitors internal supply voltages in order to ensure proper operation. If proper operation can not be ensured, then the device reacts accordingly, see Table 26.



Downloaded from Arrow.com.

The device features two independent voltage references:

- for the voltage regulators
- for voltage monitoring

The device supervises the difference between the voltage references internally.

If the difference exceeds a predefined warning threshold, then the device generates an interrupt and sets one of the following status flags depending on the internal root cause: SYSSF1-QM.BGWARN1 or SYSSF1-QM.BGWARN2. Based on this information the system can be designed to react appropriately.

If the difference exceeds a predefined fault threshold, then the device shuts down and changes into FAULT state, as proper operation of the device can not be ensured. Depending on the internal root cause the device sets SYSSF0-QM.BGFLT1 or SYSSF0-QM.BGFLT2.

### 6.1.5 Electrical characteristics voltage monitoring

**Table 14 Electrical characteristics voltage monitoring**

$T_j$ = -40°C to 150°C; $V_{R1VSx}$ = 3.7 V to 35 V; all voltages with respect to ground, positive current flowing into pin (unless otherwise specified)

| Parameter | Symbol | Values | | | Unit | Note or condition | Number |
|---|---|---|---|---|---|---|---|
| | | Min. | Typ. | Max. | | | |
| **Input voltage battery supply – (R1VSx-AGx)** | | | | | | | |
| Undervoltage threshold | $V_{R1VSx,UV}$ | 4.9 | 5.025 | 5.15 | V | – | P_6.1.5.1 |
| **Output voltage Buck1 – (R1FB-AGx)** | | | | | | | |
| Overvoltage threshold | $V_{Buck1,OV}$ | +6.0 | +8.0 | +10 | % | Referenced to Buck1 nominal output voltage $V_{R1FB}$ | P_6.1.5.3 |
| Overvoltage hysteresis | $V_{Buck1,OV,Hys}$ | 0.4 | – | 2.25 | % | – | P_6.1.5.5 |
| Undervoltage threshold | $V_{Buck1,UV}$ | -6.0 | -8.0 | -10 | % | Referenced to Buck1 nominal output voltage $V_{R1FB}$ | P_6.1.5.7 |
| Undervoltage hysteresis | $V_{Buck1,UV,Hys}$ | 0.4 | – | 2.25 | % | – | P_5.2.1.6 |
| Deep undervoltage threshold | $V_{Buck1,DUV}$ | -38 | -40 | -42 | % | – | P_6.1.5.9 |
| Deep undervoltage hysteresis | $V_{Buck1,DUV,Hys}$ | 0.8 | – | 3.15 | % | – | P_6.1.5.10 |
| Deglitching time | $t_{Buck1,deg}$ | 8 | - | 20 | µs | – | P_6.1.5.11 |
| Short-to-ground detection time | $t_{Buck1,StG}$ | 2.7 | 3.0 | 3.3 | ms | – | P_6.1.5.12 |

**(table continues...)**



Downloaded from Arrow.com.

**Table 14 (continued) Electrical characteristics voltage monitoring**

$T_j$ = -40°C to 150°C; $V_{R1VSx}$ = 3.7 V to 35 V; all voltages with respect to ground, positive current flowing into pin (unless otherwise specified)

| Parameter | Symbol | Values | | | Unit | Note or condition | Number |
|---|---|---|---|---|---|---|---|
| | | Min. | Typ. | Max. | | | |
| **Output voltage Buck2 (R2FB-AGx)** | | | | | | | |
| Overvoltage threshold | $V_{Buck2,OV}$ | +6.0 | +8.0 | +10 | % | Referenced to Buck2 nominal output voltage $V_{R2FB}$ | P_6.1.5.16 |
| Overvoltage hysteresis | $V_{Buck2,OV,Hys}$ | 0.4 | – | 2.25 | % | – | P_6.1.5.18 |
| Undervoltage threshold | $V_{Buck2,UV}$ | -6.0 | -8.0 | -10 | % | Referenced to Buck2 nominal output voltage $V_{R2FB}$ | P_6.1.5.20 |
| Undervoltage hysteresis | $V_{Buck2,UV,Hys}$ | 0.4 | – | 2.25 | % | – | P_6.1.5.22 |
| Deep undervoltage threshold | $V_{Buck2,DUV}$ | -38 | -40 | -42 | % | – | P_6.1.5.23 |
| Deep undervoltage hysteresis | $V_{Buck2,DUV,Hys}$ | 0.8 | – | 3.15 | % | – | P_6.1.5.24 |
| Deglitching time | $t_{Buck2,deg}$ | 8 | - | 20 | µs | – | P_6.1.5.25 |
| Short-to-ground detection time | $t_{Buck2,StG}$ | 2.7 | 3.0 | 3.3 | ms | – | P_6.1.5.26 |
| **Output voltage Boost1 – (R3FB-AGx)** | | | | | | | |
| Overvoltage threshold | $V_{Boost1,OV}$ | +6.0 | +8.0 | +10 | % | Referenced to Boost1 nominal output voltage $V_{R3FB}$ | P_6.1.5.28 |
| Overvoltage hysteresis | $V_{Boost1,OV,Hys}$ | 0.4 | – | 2.25 | % | – | P_6.1.5.30 |
| Undervoltage threshold | $V_{Boost1,UV}$ | -6.0 | -8.0 | -10 | % | Referenced to Boost1 nominal output voltage $V_{R3FB}$ | P_6.1.5.32 |
| Undervoltage hysteresis | $V_{Boost1,UV,Hys}$ | 0.4 | – | 2.25 | % | – | P_6.1.5.34 |
| Deglitching time | $t_{Boost1,deg}$ | 8 | - | 20 | µs | – | P_6.1.5.35 |
| Short-to-ground detection time | $t_{Boost1,StG}$ | 2.7 | 3.0 | 3.3 | ms | – | P_6.1.5.36 |

**(table continues...)**



Downloaded from Arrow.com.

**Table 14 (continued) Electrical characteristics voltage monitoring**

$T_j$ = -40°C to 150°C; $V_{R1VSx}$ = 3.7 V to 35 V; all voltages with respect to ground, positive current flowing into pin (unless otherwise specified)

| Parameter | Symbol | Values | | | Unit | Note or condition | Number |
|---|---|---|---|---|---|---|---|
| | | Min. | Typ. | Max. | | | |
| **External voltage monitors VM1 (VM1FB-AGx)** | | | | | | | |
| Overvoltage threshold | $V_{VM1,OV}$ | +6.0 | +8.0 | +10 | % | Referenced to VM1 nominal reference voltage $V_{VM1FB,nom}$ | P_6.1.5.38 |
| Overvoltage hysteresis | $V_{VM1,OV,Hys}$ | 0.4 | – | 2.25 | % | – | P_6.1.5.40 |
| Undervoltage threshold | $V_{VM1,UV}$ | -6.0 | -8.0 | -10 | % | Referenced to VM1 nominal reference voltage $V_{VM1FB,nom}$ | P_6.1.5.42 |
| Undervoltage hysteresis | $V_{VM1,UV,Hys}$ | 0.4 | – | 2.25 | % | – | P_6.1.5.44 |
| Deglitching time | $t_{VM1,deg}$ | 8 | - | 20 | µs | – | P_6.1.5.45 |
| Short-to-ground detection time | $t_{VM1,StG}$ | 2.7 | 3.0 | 3.3 | ms | – | P_6.1.5.46 |
| **External voltage monitor VM2 (VM2FB-AGx)** | | | | | | | |
| Overvoltage threshold | $V_{VM2,OV}$ | +6.0 | +8.0 | +10 | % | Referenced to VM2 nominal reference voltage $V_{VM2FB,nom}$ | P_6.1.5.48 |
| Overvoltage hysteresis | $V_{VM2,OV,Hys}$ | 0.4 | – | 2.25 | % | – | P_6.1.5.50 |
| Undervoltage threshold | $V_{VM2,UV}$ | -6.0 | -8.0 | -10 | % | Referenced to VM2 nominal reference voltage $V_{VM2FB,nom}$ | P_6.1.5.52 |
| Undervoltage hysteresis | $V_{VM2,UV,Hys}$ | 0.4 | – | 2.25 | % | – | P_6.1.5.54 |
| Deglitching time | $t_{VM2,deg}$ | 8 | - | 20 | µs | – | P_6.1.5.55 |
| Short-to-ground detection time | $t_{VM2,StG}$ | 2.7 | 3.0 | 3.3 | ms | – | P_6.1.5.56 |

## 6.2 Thermal protection

The device incorporates multiple independent temperature sense elements to monitor its temperature, specifically of the high-voltage regulator Buck1 and the post-regulator Buck2. Please refer to the respective sections for more information on the individual blocks.

A third temperature sensor is located in the monitoring block of the device. Table 15 shows the temperature thresholds for the sensor in the monitoring block.

While the device monitors temperature in the individual blocks, it collects the thermal shutdown (TSD) events of these measurements globally. The device sets an appropriate bit in the SPI registers OTSF0 and OTSF1 for each individual warning and fault event.

An overtemperature warning event for any of the three temperature sensors generates an interrupt for the microcontroller.



Downloaded from Arrow.com.

A thermal shutdown event (TSD) for any of the three sensors triggers a move to the FAULT state. If a thermal shutdown event occurs, then the device extends the fault time to approximately one second (see Table 27) in order to allow the temperature to drop prior to the restart of the device.

### 6.2.1 Electrical characteristics temperature sensor monitoring block

**Table 15 Electrical characteristics temperature sensor monitoring block**

$V_{R1VSx}$ = 3.7 V to 35 V; all voltages with respect to ground, positive current flowing into pin (unless otherwise specified)

| Parameter | Symbol | Values | | | Unit | Note or condition | Number |
|---|---|---|---|---|---|---|---|
| | | Min. | Typ. | Max. | | | |
| Overtemperature warning threshold | $T_{j,MONOT,WRN}$ | 130 | 145 | 160 | °C | [1] $T_j$ increasing | P_6.2.0.1 |
| Overtemperature warning threshold | $T_{j,MONOT,WRN}$ | 120 | 135 | 150 | °C | [1] $T_j$ decreasing | P_6.2.0.2 |
| Overtemperature fault threshold | $T_{j,MONOT,FLT}$ | 175 | 190 | 205 | °C | [1] $T_j$ increasing | P_6.2.0.3 |
| Overtemperature fault threshold | $T_{j,MONOT,FLT}$ | 165 | 180 | 195 | °C | [1] $T_j$ decreasing | P_6.2.0.4 |

1) Not subject to production test, specified by design.



Downloaded from Arrow.com.

# 7 Microcontroller interface and supervisory functions

This section describes the connections between the device and the microcontroller.

Figure 8 shows that the microcontroller and the device use several signals for communication and for mutual monitoring of correct operation. An SPI configures the device and monitors status information. A dedicated interrupt signal of the device notifies the microcontroller about any interaction required. To ensure safe operation of the microcontroller a watchdog trigger line (WDI) is available. The device can use a reset-output signal (ROT) to reset the microcontroller if required.

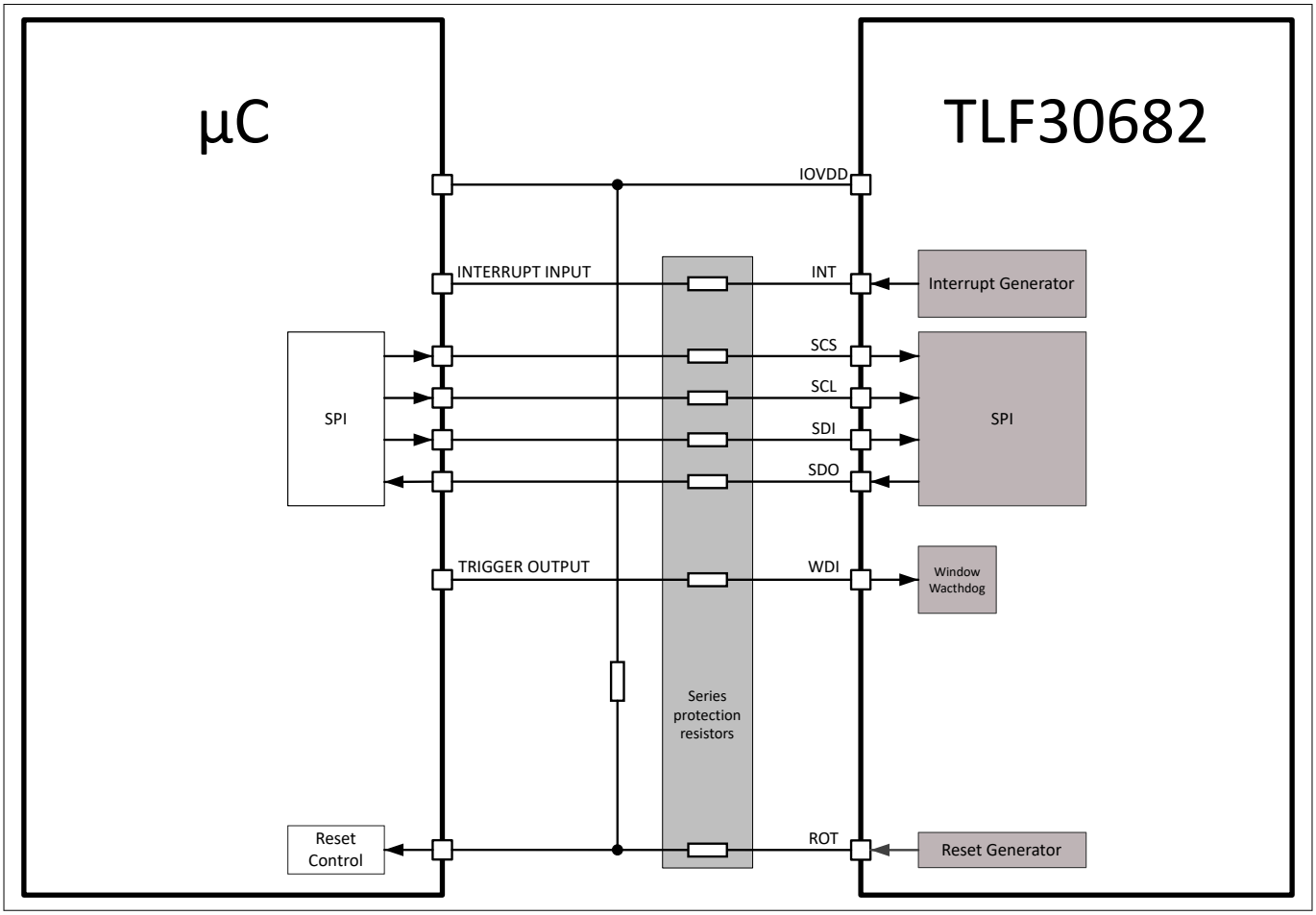


**Figure 8 Interface between device and microcontroller**

## 7.1 Microcontroller interface supply IOVDD pin

The device can handle microcontrollers with different IO supply voltages. This is accommodated by a dedicated supply pin (IOVDD) at which the IO supply voltage is externally supplied to the device. This voltage then drives the logic output pins to the microcontroller. It is also used to determine the input thresholds for the input cells. The affected pins are:

- SCS
- SCL
- SDI
- SDO
- INT
- ROT
- WDI



Downloaded from Arrow.com.

- SYNCI
- SYNCO


Downloaded from Arrow.com.

### 7.1.1 Electrical characteristics microcontroller interface supply

**Table 16 Electrical characteristics microcontroller interface supply**

$T_j$ = -40°C to 150°C; $V_{R1VSx}$ = 3.7 V to 35 V; all voltages with respect to ground, positive current flowing into pin (unless otherwise specified)

| Parameter | Symbol | Values | | | Unit | Note or condition | Number |
|---|---|---|---|---|---|---|---|
| | | Min. | Typ. | Max. | | | |
| **Microcontroller interface** | | | | | | | |
| Supply voltage | $V_{IOVDD}$ | 3.0 | – | 5.5 | V | – | P_7.1.1.1 |
| Supply current | $I_{IOVDD}$ | – | 2.5 | – | mA | $V_{IOVDD}$ = 3.3 V; SDO, SDI and SCL switching at 10 MHz; SYNCI and SYNCO switching at 2.5 MHz; SCS, ROT, INT and WDI are static signals | P_7.1.1.2 |



Downloaded from Arrow.com.

## 7.2 Serial peripheral interface (SPI)

### 7.2.1 SPI introduction

The serial peripheral interface (SPI) is a synchronous serial data link that operates in full duplex mode. The SDI pin receives data from the microcontroller and the SDO pin transmits data to the microcontroller.

The device communicates in slave mode where the master, for example the microcontroller, provides a clock on the SCL pin and initiates the data frame. The device is addressed via a dedicated chip select line (SCS pin).

**Functional description SPI**

The data on pin SDI is captured on the falling edge of the SPI clock signal (pin SCL) and shifted on the rising edge of the SPI clock signal. The data on pin SDO is set on the falling edge of SPI clock signal (pin SCL) and shifted on the rising edge of the SPI clock signal. The SPI master is to capture the data on the falling edge of the SPI clock signal.

An SPI command consists of the following parts, see Figure 9:

- command bit CMD
- 6 address bits A0-A5
- 8 data bits D0-D7
- parity bit P

The SPI response for read operations consists of the following parts:

- command bit CMD
- 6 status bits S0-S5
- 8 data bits D0-D7
- parity bit P

For a write operation, the data read on SDI is looped back via SDO.

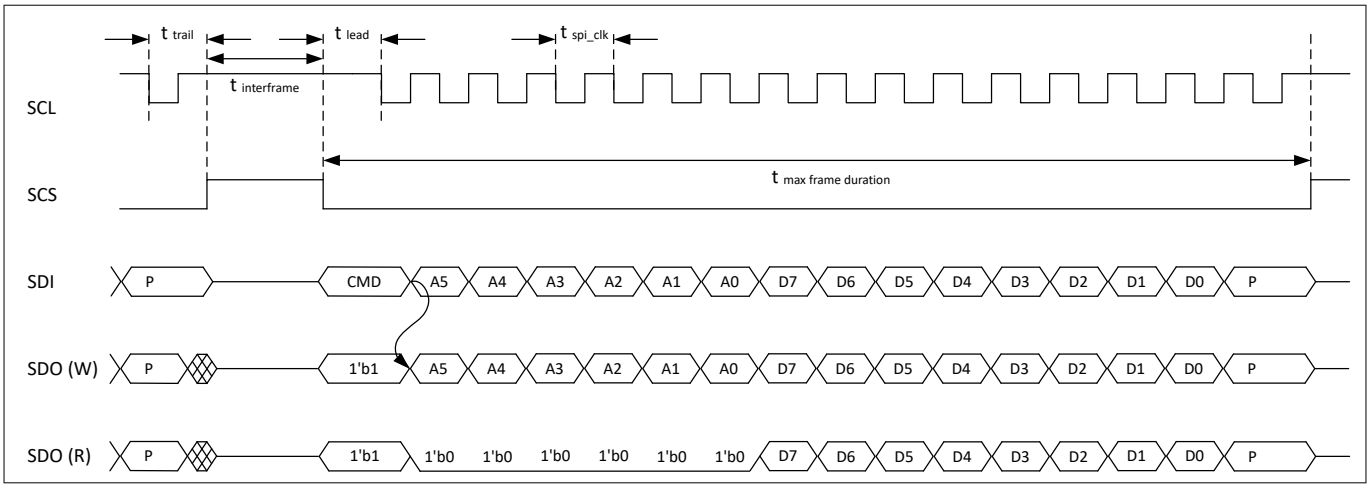


**Figure 9 SPI frame format**

The command bit in the SPI command is set to 1'b0 for a read and 1'b1 for a write operation. In the reply, the command bit is always set to 1'b1.

The parity bit P is calculated from the 15 data bits of the SPI message consisting of the CMD bit, the 6 address bits and the 8 data bits. The parity bit is set to '1', if the number of '1's in the data bits is odd, that is it is a XOR function of the 15 data bits. The receiver of the SPI message should verify the parity bit prior to processing the payload of the message.

The SPI performs several checks on the communication to ensure proper behavior:

- If a parity fault occurs, then the device ignores the data, sets the SPI status bit SPISF.PAR and generates an interrupt.



Downloaded from Arrow.com.

- If a write operation to an invalid address occurs, then the device ignores the data, sets the SPI status SPISF.ADDR and generates an interrupt.
- If a read operation from an invalid address occurs, then the device reads all data bits as zero and sets the parity bit to a wrong value in order to indicate an incorrect message to the SPI master. In addition the device sets the SPI status bit SPISF.ADDR and generates an interrupt.
- If a write operation with an incorrect number of SPI clock cycles occurs while SCS is "low", then the device ignores the data, sets the SPI status SPISF.LEN and generates an interrupt.
- If a read operation with an incorrect number of SPI clock cycles occurs, then the device sets the SPI status SPISF.LEN and generates an interrupt to indicate an invalid data message to the SPI master. The SDO pin provides the data during this operation. At the end of the message it indicates its correctness.
- If the frame duration exceeds the maximum frame time $t_{SPI_fl}$, then the device terminates communication by disabling the output driver of the SDO pin. In addition the device sets the SPI status bit SPISF.DUR and generates an interrupt.

The device initiates interrupts on SPI errors are only after SCS is driven "high" or after a frame timeout occurs.


Downloaded from Arrow.com.

### 7.2.2 SPI write access to protected registers

Certain registers are protected against accidental write operations.

Those protected registers are implemented in pairs, where a protected register (for example PWDCFG0) is used to store a configuration request, while an associated read-only register (for example RWDCFG0) is used to store the currently active configuration.

By default, write access to protected registers is disabled. The status of the protection can be checked using PROTSTAT.LOCK. Write access must be enabled using the UNLOCK sequence prior to updating the registers. After completing the register update, the configuration must be activated using the LOCK sequence. This disables the write access to the protected register and copies the data to the read-only registers.

After the LOCK sequence an internal configuration time of maximum of 60 µs must be considered to ensure that the new configuration is applied in the device.

Read access to protected configuration registers is always possible. Read operations invert the data.

The device does not support updating a single protected register. The microcontroller must ensure that all protected registers are configured properly by writing a new value into particular registers and by verifying the content of unchanged registers.

#### UNLOCK sequence

An UNLOCK sequence consists of four consecutive key bytes (1: $AB_H$; 2: $EF_H$; 3: $56_H$; 4: $12_H$) written into the PROTCFG register. The respective SPI write operations must be atomic, so that they are not interrupted by an SPI write operation to a different register. Read operations to any register are permitted. The progress of the UNLOCK sequence can be monitored in the PROTCFG register where the respective key bit is set for each correctly written key byte. If an incorrect UNLOCK sequence occurs due to a wrong key or an SPI write operation to a different address, then the device resets the UNLOCK sequence and clears all key bits. The device sets the SPISF.LOCK bit and generates an interrupt. The microcontroller must restart the UNLOCK sequence.

#### LOCK sequence

A LOCK sequence consists of four consecutive key bytes (1: $DF_H$; 2: $34_H$; 3: $BE_H$; 4: $CA_H$) written into the PROTCFG register. The respective SPI write operations must be atomic, so that they are not interrupted by an SPI write operation to a different register. Read operations to any register are permitted. The progress of the LOCK sequence can be monitored in the PROTCFG register where the respective key bit is set for each correctly written key byte. If an incorrect LOCK sequence occurs due to a wrong key or an SPI write operation to a different address, then the device resets the LOCK sequence and clears all key bits. The device sets the SPISF.LOCK bit and generates an interrupt. The microcontroller must restart the LOCK sequence.



Downloaded from Arrow.com.

### 7.2.3 SPI write initiated state transition request and regulator configuration

State machine transitions and configuration of output rails can be performed with direct write access to dedicated registers. A defined protocol protects the registers from unintended changes.

In order to request a state transition or a change of the configuration of an output rail the request data must be written to two separate, inverted registers (DEVCTRL and DEVCTRLN). The write operation must be atomic, with no other SPI write operation to a different address interrupting the initial write. The data is applied on the rising edge of the CS at the end of the second command.

If an invalid protocol occurs, then the device rejects the request, sets the SPI status flag SPISF.DEVCTRL and generates an interrupt.

The following conditions lead to invalid requests:

- An SPI write operation to a different address, which interrupts the write operation to DEVCTRL and DEVCTRLN
- The data in DEVCTRL and DEVCTRLN is not consistent

If an invalid state transition request occurs, according to the state machine in Chapter 8, then the device ignores the transition request without generating an interrupt. The device executes the change in configuration of output rails.

### 7.2.4 Configuration of Buck2 output voltage via SPI

The output voltage of Buck2 can be configured with direct write access to dedicated registers. A specific protocol is used to avoid unwanted changes to the registers.

In order to request a change of the Buck2 output voltage the configuration data must be written to two separate, inverted registers (B2VCTRL and B2VCTRLN). The write operation must be atomic with no other SPI write operation to a different address interrupting the initial write. The data is applied on the rising edge of the CS at the end of the second command.

If an invalid protocol occurs, the device rejects the request, sets the SPI status flag SPISF.B2VCTRL and generates an interrupt.

The following conditions lead to invalid requests:

- An SPI write operation to a different address, which interrupts the write operation to B2VCTRL and B2VCTRLN.
- The data in B2VCTRL.B2VOUTF and B2VCTRLN.B2VOUTF is not consistent.

If a Buck2 output voltage configuration request is invalid, then the device ignores the request without generating an interrupt.



Downloaded from Arrow.com.

### 7.2.5 SPI timing

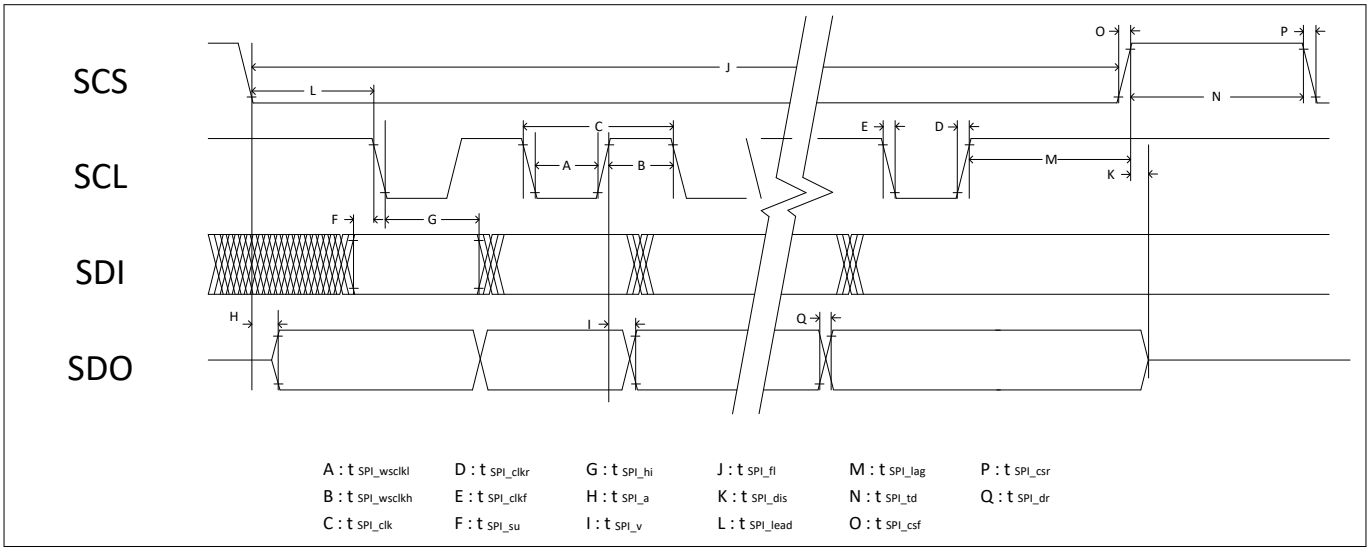


**Figure 10 SPI timing**



Downloaded from Arrow.com.

### 7.2.6 Electrical characteristics SPI

**Table 17 Electrical characteristics SPI**

$T_j$ = -40°C to 150°C; $V_{R1VSx}$ = 3.7 V to 35 V; all voltages with respect to ground, positive current flowing into pin (unless otherwise specified)

| Parameter | Symbol | Values | | | Unit | Note or condition | Number |
|---|---|---|---|---|---|---|---|
| | | Min. | Typ. | Max. | | | |
| **SPI chip select SCS** | | | | | | | |
| Valid input level "high" | $V_{SCS, high}$ | 0.7 | – | – | $V_{IOVDD}$ | $V_{SCS}$ increasing | P_7.2.5.1 |
| Valid input level "low" | $V_{SCS, low}$ | – | – | 0.8 | V | $V_{SCS}$ decreasing | P_7.2.5.2 |
| Input hysteresis | $V_{SCS, hys}$ | – | 0.06 | – | $V_{IOVDD}$ | – | P_7.2.5.3 |
| Pull-up current | $I_{SCS}$ | -180 | -55 | – | µA | $V_{IOVDD} \leq 5.0$ V | P_7.2.5.4 |
| Input capacitance | $C_{SCS}$ | – | 4 | 15 | pF | 1) | P_7.2.5.5 |
| **SPI clock SCL** | | | | | | | |
| Valid input level "high" | $V_{SCL, high}$ | 0.7 | – | – | $V_{IOVDD}$ | $V_{SCL}$ increasing | P_7.2.5.6 |
| Valid input level "low" | $V_{SCL, low}$ | – | – | 0.8 | V | $V_{SCL}$ decreasing | P_7.2.5.7 |
| Input hysteresis | $V_{SCL, hys}$ | – | 0.06 | – | $V_{IOVDD}$ | – | P_7.2.5.8 |
| Pull-up current | $I_{SCL}$ | -180 | -55 | – | µA | $V_{IOVDD} \leq 5.0$ V | P_7.2.5.9 |
| Input capacitance | $C_{SCL}$ | – | 4 | 15 | pF | 1) | P_7.2.5.10 |
| **SPI data input SDI** | | | | | | | |
| Valid input level "high" | $V_{SDI, high}$ | 0.7 | – | – | $V_{IOVDD}$ | $V_{SDI}$ increasing | P_7.2.5.11 |
| Valid input level "low" | $V_{SDI, low}$ | – | – | 0.8 | V | $V_{SDI}$ decreasing | P_7.2.5.12 |
| Input hysteresis | $V_{SDI, hys}$ | – | 0.06 | – | $V_{IOVDD}$ | – | P_7.2.5.13 |
| Pull-down current | $I_{SDI}$ | – | 135 | 330 | µA | $V_{SDI} = V_{IOVDD}$ | P_7.2.5.14 |
| Input capacitance | $C_{SDI}$ | – | 4 | 15 | pF | 1) | P_7.2.5.15 |
| **SPI data output SDO** | | | | | | | |
| Output level "high" | $V_{SDO, high}$ | 0.7 | – | – | $V_{IOVDD}$ | $I_{SDO}$ = -7 mA | P_7.2.5.16 |
| Output level "low" | $V_{SDO, low}$ | – | – | 0.7 | V | $I_{SDO}$ = -5.5 mA | P_7.2.5.17 |
| Output rise time | $t_{SDO,rise}$ | – | – | 25 | ns | $C_{SDO,Load}$ = 50 pF | P_7.2.5.18 |
| Output fall time | $t_{SDO,fall}$ | – | – | 25 | ns | $C_{SDO,Load}$ = 50 pF | P_7.2.5.19 |
| Output tristate capacitance | $C_{SDO,tri}$ | – | 4 | 15 | pF | 1) | P_7.2.5.20 |
| Output tristate leakage | $I_{SDO,tri}$ | -10 | – | 10 | µA | – | P_7.2.5.21 |

1) Not subject to production test, specified by design.



Downloaded from Arrow.com.

### 7.2.7 Electrical characteristics SPI timing

**Table 18 Electrical characteristics SPI timing**

$T_j$ = -40°C to 150°C; $V_{R1VSx}$ = 3.7 V to 35 V; all voltages with respect to ground, positive current flowing into pin (unless otherwise specified)

| Parameter | Symbol | Values | | | Unit | Note or condition | Number |
|---|---|---|---|---|---|---|---|
| | | Min. | Typ. | Max. | | | |
| CLK_SPI operating frequency | $f_{SPI_clk}$ | – | – | 10 | MHz | – | P_7.2.5.22 |
| CLK signal duty cycle | $D_{SCL}$ | 45 | 50 | 55 | % | – | P_7.2.5.23 |
| CLK_SPI "high" time | $t_{SPI_wsclkh}$ | 45 | – | – | ns | – | P_7.2.5.24 |
| CLK_SPI "low" time | $t_{SPI_wsclkl}$ | 45 | – | – | ns | – | P_7.2.5.25 |
| CLK_SPI fall time | $t_{SPI_clkf}$ | – | – | 100 | ns | $f_{SPI_clk}$ < 1 MHz | P_7.2.5.26 |
| CLK_SPI fall time | $t_{SPI_clkf}$ | – | – | $0.1/f_{SPI_clk}$ | ns | $f_{SPI_clk}$ ≥ 1 MHz | P_7.2.5.27 |
| CLK_SPI rise time | $t_{SPI_clkr}$ | – | – | 100 | ns | $f_{SPI_clk}$ < 1 MHz | P_7.2.5.28 |
| CLK_SPI rise time | $t_{SPI_clkr}$ | – | – | $0.1/f_{SPI_clk}$ | ns | $f_{SPI_clk}$ ≥ 1 MHz | P_7.2.5.29 |
| CLK_SPI lead time | $t_{SPI_lead}$ | 100 | – | – | ns | – | P_7.2.5.30 |
| CLK_SPI lag time | $t_{SPI_lag}$ | 50 | – | – | ns | – | P_7.2.5.31 |
| SPI chip select (SCS) rise time | $t_{SPI_csr}$ | – | – | 200 | ns | $t_{SPI_lead}$ = 100 ns | P_7.2.5.32 |
| SPI chip select (SCS) rise time | $t_{SPI_csr}$ | – | – | $0.2 \times t_{SPI_lead}$ | ns | $t_{SPI_lead}$ > 100 ns | P_7.2.5.33 |
| SPI chip select (SCS) rise time | $t_{SPI_csf}$ | – | – | 200 | ns | $t_{SPI_lead}$ = 100 ns | P_7.2.5.34 |
| SPI chip select (SCS) fall time | $t_{SPI_csf}$ | – | – | $0.2 \times t_{SPI_lead}$ | ns | $t_{SPI_lead}$ > 100 ns | P_7.2.5.35 |
| SPI data input (SDI) setup | $t_{SPI_su}$ | 10 | – | – | ns | – | P_7.2.5.36 |
| SPI data input (SDI) hold time | $t_{SPI_hi}$ | 10 | – | – | ns | – | P_7.2.5.37 |
| SPI data output (SDO) valid after CLK_SPI | $t_{SPI_v}$ | – | – | $36 + (0.1/f_{SPI_clk})$ | ns | $C_{SDO,load}$ = 50 pF; $f_{SPI_clk}$ ≥ 1 MHz | P_7.2.5.38 |
| SPI data output (SDO) valid after CLK_SPI | $t_{SPI_v}$ | – | – | 136 | ns | $C_{SDO,load}$ = 50 pF; $f_{SPI_clk}$ < 1 MHz | P_7.2.5.39 |
| SPI write propagation delay SDI to SDO | $t_{SPI_wpd}$ | – | – | 35 | ns | – | P_7.2.5.40 |
| SPI data output (SDO) access | $t_{SPI_a}$ | – | – | 50 | ns | $C_{SDO,load}$ = 50 pF | P_7.2.5.41 |
| SPI data output (SDO) lag | $t_{SPI_lag}$ | 50 | – | – | ns | – | P_7.2.5.42 |

**(table continues...)**



Downloaded from Arrow.com.

**Table 18 (continued) Electrical characteristics SPI timing**

$T_j$ = -40°C to 150°C; $V_{R1VSx}$ = 3.7 V to 35 V; all voltages with respect to ground, positive current flowing into pin (unless otherwise specified)

| Parameter | Symbol | Values | | | Unit | Note or condition | Number |
|---|---|---|---|---|---|---|---|
| | | Min. | Typ. | Max. | | | |
| SPI data output (SDO) disable time | $t_{SPI_dis}$ | – | – | 100 | ns | $C_{SDO,load}$ = 50 pF | P_7.2.5.43 |
| Sequential transfer delay | $t_{SPI_td}$ | 350 | – | – | ns | – | P_7.2.5.44 |
| Frame duration (SCS "low") | $t_{SPI_fl}$ | – | – | 1.85 | ms | – | P_7.2.5.45 |


Downloaded from Arrow.com.

## 7.3 Reset generation (ROT signal)

### Reset output pin ROT

The reset output pin ROT is an open drain structure. As soon as a reset condition occurs, the device pulls the ROT pin below $V_{ROT,low}$. Once the internal reset signal is released, an internal pull-up current pulls the ROT pin towards the microcontroller supply voltage $V_{IOVDD}$. An external pull-up resistor can be connected between the ROT and IOVDD pins to speed up the transition. As soon as all events leading to the reset are cleared and the reset delay time expires, the device releases the internal reset signal.

### Reset events

Different internal events can trigger a reset signal, see Table 26 for details. Depending on the severity of the error event the device triggers a reset of the following types:

- soft reset: the device forces the ROT pin "low", remains in ACTIVE state and keeps all supply voltages on
- hard reset: the device forces the ROT pin "low", enters FAULT state and turns all supply voltages off

## 7.3.1 Electrical characteristics ROT

**Table 19 Electrical characteristics ROT**

$T_j$ = -40°C to 150°C; $V_{R1VSx}$ = 3.7 V to 35 V; all voltages with respect to ground, positive current flowing into pin (unless otherwise specified)

| Parameter | Symbol | Values | | | Unit | Note or condition | Number |
|---|---|---|---|---|---|---|---|
| | | Min. | Typ. | Max. | | | |
| **Reset output ROT** | | | | | | | |
| Pull-up current | $I_{ROT,high}$ | -180 | -120 | – | µA | $V_{ROT} \leq 2.0V$ | P_7.3.1.1 |
| Output level "low" | $V_{ROT,low}$ | – | – | 0.4 | V | $V_{IOVDD}$ = 5.0 V; $I_{ROT}$ = 3.5 mA | P_7.3.1.2 |
| Output level "low" | $V_{ROT,low}$ | – | – | 0.4 | V | $V_{IOVDD}$ =3.3 V; $I_{ROT}$ = 3.5 mA | P_7.3.1.3 |
| Output fall time | $t_{ROT,fall}$ | – | – | 25 | ns | $C_{ROT,load}$ = 50 pF | P_7.3.1.5 |
| **Reset timing** | | | | | | | |
| Reset cycle time | $t_{cycle}$ | – | 10 | – | µs | – | P_7.3.1.6 |
| Reset delay time adjustment range | $t_{RD}$ | 20 | – | 2000 | $t_{cycle}$ | – | P_7.3.1.7 |
| Reset delay time default value | | – | 100 | – | $t_{cycle}$ | 1) | P_7.3.1.8 |

1) The default configuration for the reset contributor might not generate a reset at the first start up of the device.



Downloaded from Arrow.com.

## 7.4 Interrupt generation (INT signal)

A dedicated interrupt generation block is implemented which is handling requests from independent sources to generate an interrupt. The different requesters are as follows:

- State machine in case:
  - A requested state transition has not been performed successfully
  - A requested state transition has been performed successfully, the microcontroller may only send (additional) SPI commands after an interrupt event has been generated by the system. The purpose of the interrupt event is to inform the microcontroller that a state transition has been performed successfully and that the system can perform SPI communication at full SPI speed.
- Watchdog, an interrupt request is generated if the watchdog is not serviced properly and configured in a way to allow service errors to occur, i.e. an error counter threshold value of more than 2 is configured. In this case an interrupt is generated only if the error counter threshold is not exceeded due to this error
- Error pin monitoring, an interrupt request is generated if the error pin monitoring block detects an error and is configured in a way to allow occurrence of this error for a certain amount of time (recovery delay action enabled). In this case an interrupt is requested if an error is detected by the error pin monitoring and the recovery delay has not expired
- Monitoring Block, an interrupt request is generated based on the defined system reaction.
- Overtemperature warnings and over temperature shutdown of communication LDO.
- Overcurrent conditions of voltage reference or standby LDO.
- SPI block in case an SPI error has occurred.
- Double bit error in the protected configuration.

The device generates an interrupt to inform the connected microcontroller that a non-severe event has occurred. This allows the microcontroller to take proper action based on the source of the interrupt. A single interrupt line exists, which is high on default. All Internal interrupt sources are enabled by default and cannot be disabled.

An interrupt is signaled by pulling the interrupt line low for at least $t_{INT}$ (interrupt min. pulse width) after an internal interrupt condition occurs. The interrupt line will be driven high if all of the GSF register flag(s) has/have been cleared via SPI operation earliest after $t_{INT}$ has expired but latest after $t_{INTTO}$ has expired.

Special cases:

- If an interrupt is signaled by pulling INT low and not all interrupt status flags are cleared by the microcontroller within $t_{INTTO}$, the INT will stay low until $t_{INTTO}$ has expired, but no additional interrupt will be generated. Information about a pending interrupt event can be derived via the INTMISS status flag. This status flag is cleared each time the interrupt line is driven low.
- If an interrupt is signaled by pulling INT low and an additional bit is set in the GSF register interrupt flag after the interrupt bits have been read by the microcontroller and this outdated information is used to clear the interrupt flags, the interrupt line will stay low until $t_{INTTO}$ has expired, but no additional interrupt will be generated. Information about a pending interrupt event can be derived via a status flag
- After releasing the interrupt line to high, the interrupt line will stay high for at least $t_{INTTO}$ regardless if any additional internal interrupt condition has occurred or not. If a new interrupt event occurs during the delay time out ( $t_{INTTO}$), this will be signaled by generating a new pulse after the delay time out $t_{INTTO}$

All interrupt sources can only be cleared by a "write-1-to-clear" (w1c) SPI operation, i.e. writing a logic one to the corresponding bit(s) in the interrupt register will clear the event

Interrupt events are organized in a two level approach. The first level (interrupt flag) provides information about different groups of interrupt events. The second level (status flags) provides detailed information about which particular event(s) generated the interrupt. To service an interrupt one would only need to write the interrupt flag register. The status flag registers are only meant to provide detailed information. However all status flags can be cleared as well



Downloaded from Arrow.com.

An interrupt is only generated after the reset signal to the microcontroller has been released. An interrupt event which occurred while the reset line for the microcontroller is still active is not signaled at the interrupt line but the particular status bit for this event is set.

Details about the timing of the interrupt line are depicted in Figure 11.

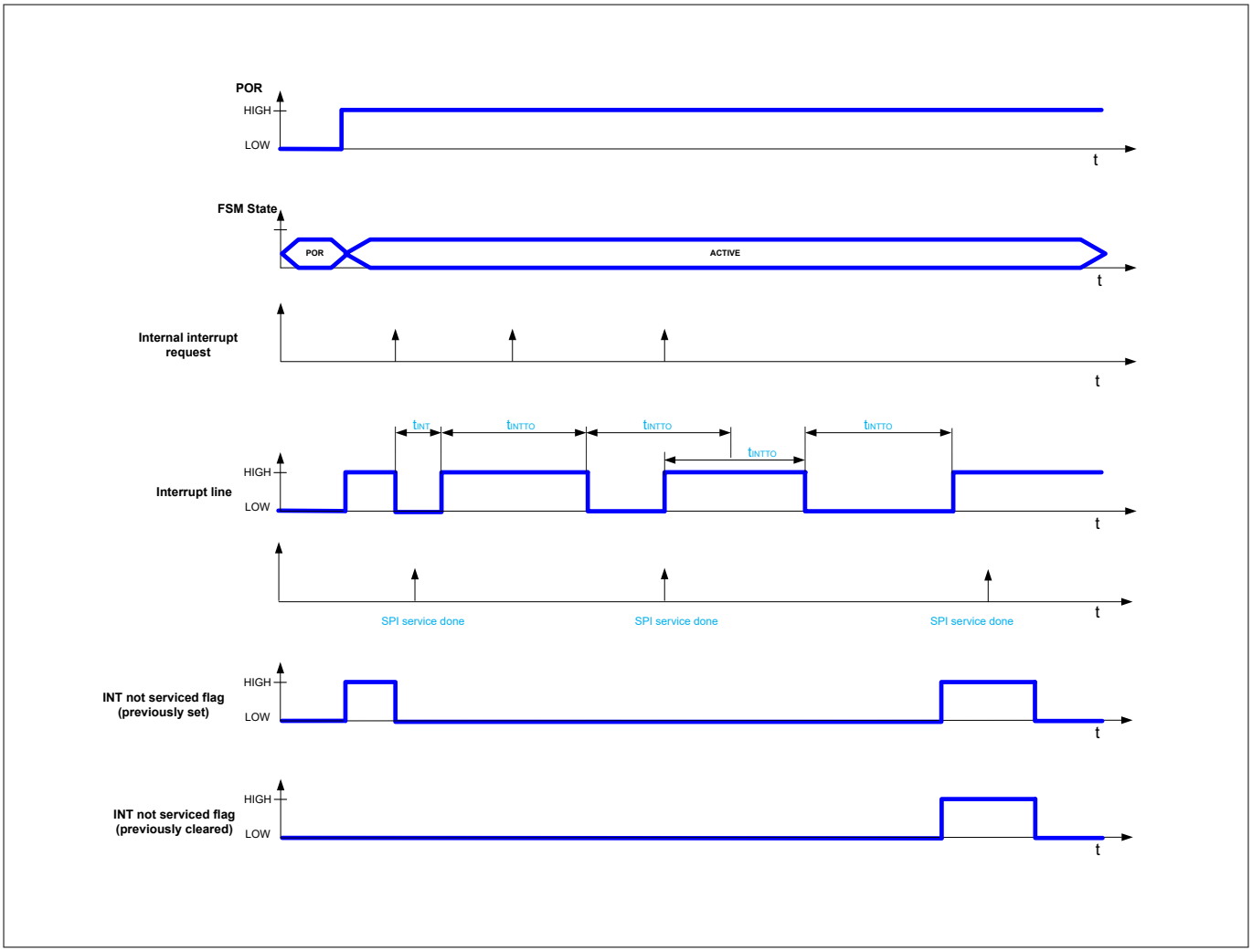


**Figure 11 Interrupt timing**

Details about the system behavior in case not all interrupt status flags have been cleared are depicted in Figure 12.



Downloaded from Arrow.com.

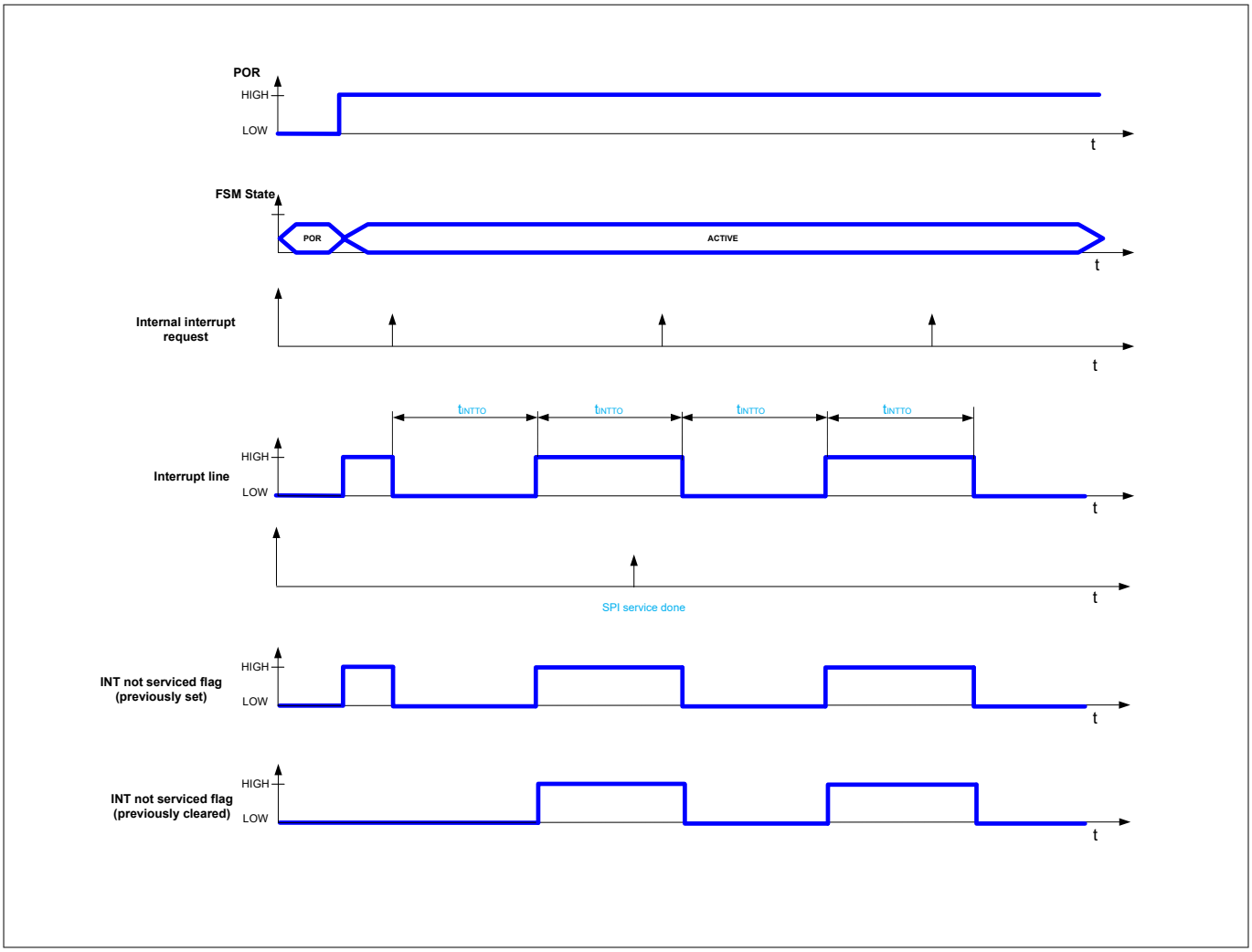


**Figure 12** **Interrupt timing without service in time**

## 7.4.1 Electrical characteristics INT

**Table 20** **Electrical characteristics INT**

$T_j$ = -40°C to 150°C; $V_{R1VSx}$ = 3.7 V to 35 V; all voltages with respect to ground, positive current flowing into pin (unless otherwise specified)

| Parameter | Symbol | Values | | | Unit | Note or condition | Number |
|---|---|---|---|---|---|---|---|
| | | Min. | Typ. | Max. | | | |
| **Interrupt signal INT** | | | | | | | |
| Output level "high" | $V_{INT,high}$ | 0.7 | – | – | $V_{IOVDD}$ | $I_{INT}$ = -7 mA | P_7.4.1.1 |
| Output level "low" | $V_{INT,low}$ | – | – | 0.7 | V | $I_{INT}$ = -5.5 mA | P_7.4.1.2 |
| Output rise time | $t_{INT,rise}$ | – | – | 25 | ns | $C_{INT,load}$ = 50 pF | P_7.4.1.3 |
| Output fall time | $t_{INT,fall}$ | – | – | 25 | ns | $C_{INT,load}$ = 50 pF | P_7.4.1.4 |
| Minimum interrupt "low" time | $t_{INT,low}$ | 90 | 100 | 110 | µs | – | P_7.4.1.5 |

**(table continues...)**



Downloaded from Arrow.com.

**Table 20 (continued) Electrical characteristics INT**

$T_j$ = -40°C to 150°C; $V_{R1VSx}$ = 3.7 V to 35 V; all voltages with respect to ground, positive current flowing into pin (unless otherwise specified)

| Parameter | Symbol | Values | | | Unit | Note or condition | Number |
|---|---|---|---|---|---|---|---|
| | | Min. | Typ. | Max. | | | |
| Interrupt "low" timeout | $t_{INTTO}$ | 270 | 300 | 330 | µs | ROT signal for the microcontroller must be released: ROT = "high" | P_7.4.1.6 |
| Minimum interrupt "high" time | $t_{INT,high}$ | 270 | 300 | 330 | µs | – | P_7.4.1.7 |



Downloaded from Arrow.com.

## 7.5 Window watchdog

### Principle of operation

The integrated window watchdog (WWD) can monitor the microcontroller. The microcontroller monitored must provide periodical triggering during the open windows. Depending on the configuration a trigger event is

- a falling edge on the WDI pin
- an SPI write operation to the register WWDSCMD

After a trigger event the window watchdog indicates either valid WWD triggering or invalid WWD triggering to the WWD error counter and the device terminates the open window.

On valid WWD triggering the device starts a closed window.

If there is no triggering during the open window or if triggering occurs during a closed window, then the window watchdog output indicates invalid WWD triggering to the WWD error counter and a new open window starts.

If the microcontroller does not trigger the window watchdog with a correct timing, then the device indicates that to the microcontroller. If multiple error events occur, then the device sets ROT "low".

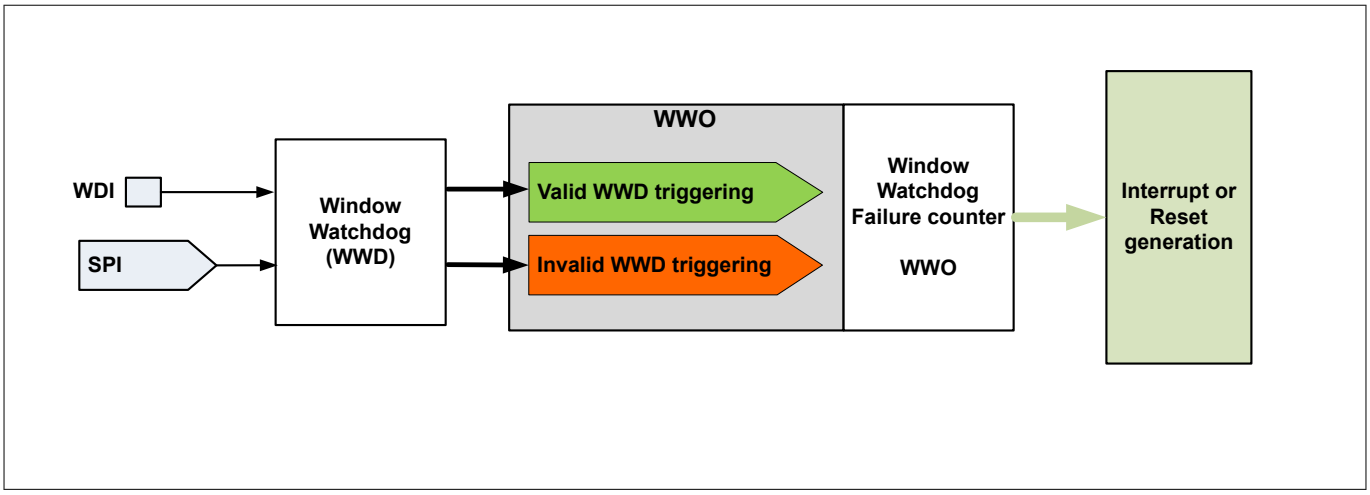


**Figure 13** **Window watchdog principle of operation**

### Configuration

The following parameters of the window watchdog can be configured via SPI in ACTIVE:

- The trigger signal can be configured to be pin triggered (pin WDI) or SPI triggered command (register WWDSCMD). The default configuration is the triggering via SPI.
- The duration of the open window and closed window cycles can be modified according to the application needs (combination of cycle time and number of cycles for open window and closed window CW).
- The threshold for the window watchdog error counter overflow can be configured via SPI.

### Initialization

As soon as the device sets ROT "high" in INIT state, it activates the window watchdog. After activation the watchdog opens a long open window (LOW) with a duration of $t_{LOW}$. With the default configuration the window watchdog expects a valid trigger event via SPI during the long open window, while it ignores WDI pin signals. Therefore, glitches at the microcontroller output connected to the WDI have no effect during startup and initialization. During the long open window cycle the microcontroller can change the window watchdog trigger source as well as the timing of the open window and of the closed window. On reconfiguration the window watchdog restarts with the new configuration. The window watchdog starts a regular open window cycle, waiting for a valid trigger signal from the selected trigger source.

If no valid triggering or configuration of the watchdog occurs during the long open window, then the window watchdog recognizes invalid WWD triggering. If the INIT timer expires while invalid WWD triggering persists, then the device generates a soft reset and it sets the ROT pin to "low". After the soft reset the window watchdog



Downloaded from Arrow.com.

starts a new long open window without indicating an interrupt. The number of repeated long open windows is limited.

If the window watchdog does not recognize valid triggering during the second long open window, then the device generates a hard reset, so it enters FAULT state and it switches off the post regulator output voltages.

### Normal operation

On a valid trigger signal during long open window the window watchdog terminates that window and starts a closed window. The closed window has a fixed duration for operation without invalid triggering.

On an in itself valid trigger signal during the closed window the window watchdog recognizes invalid WWD triggering. The window watchdog then terminates the closed window with an invalid trigger signal and starts another open window.

Each Invalid WWD triggering increments the window watchdog error counter by 2 and the device indicates an interrupt. After the closed window the window watchdog starts an open window.

If the window watchdog detects a valid trigger signal during the open window, then it terminates that window and starts the closed window. If the value of the window watchdog error is greater than 0, then valid WWD triggering decrements the window watchdog error counter by 1. If no valid triggering occurs during the open window, then the window watchdog recognizes invalid WWD triggering and increments the window watchdog error counter by 2, it starts a new open window and the device indicates an interrupt.

As long as the window watchdog detects valid triggering during normal operation, it continues to cycle between the open window and the closed window.

### Window watchdog output WWO

The window watchdog output WWO is an internal signal. It is connected to the safe window watchdog error counter.

The possible values of WWO are:

- valid WWD triggering
- invalid WWD triggering

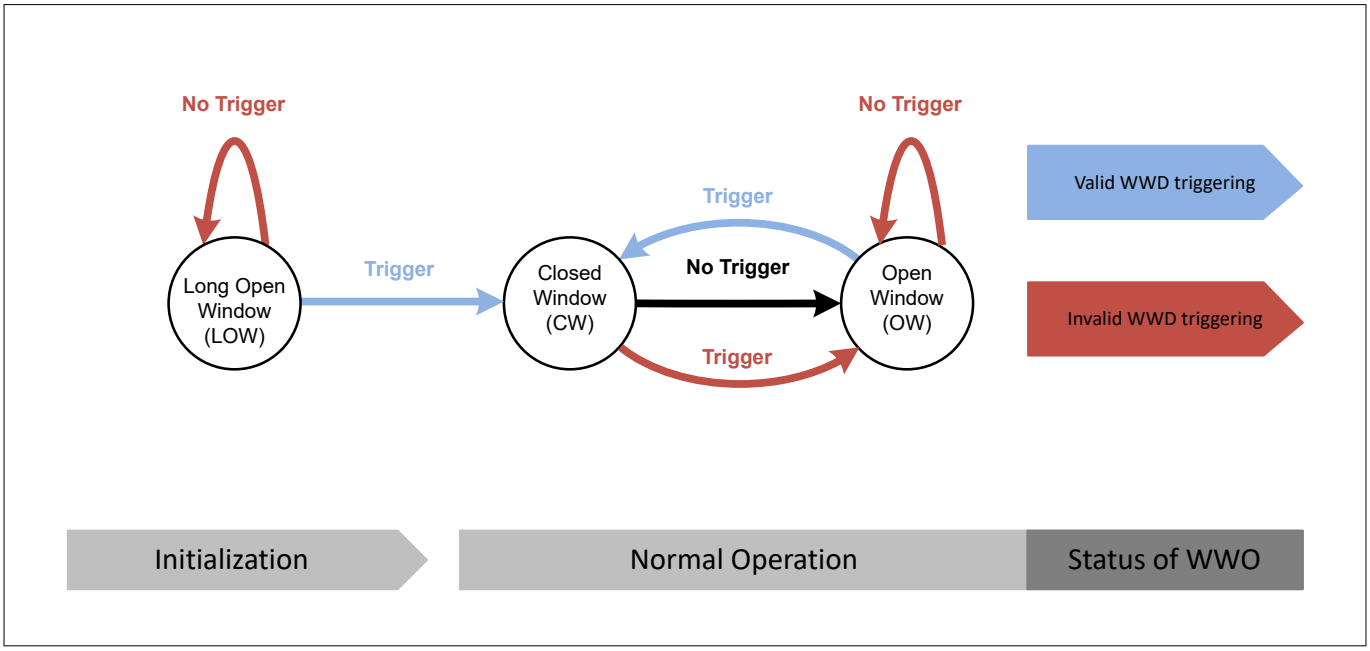


**Figure 14 Watchdog state diagram**

Description:

- Trigger is either an SPI write operation to register WWDSCMD or a valid watchdog trigger signal at pin WDI.
- No trigger during the long open window is invalid WWD triggering. The window watchdog opens a new a long open window.



Downloaded from Arrow.com.

- A trigger during the closed window is invalid WWD triggering.
- No trigger during the closed window results in an open window after the closed window.
- A trigger during the open window is valid WWD triggering. The window watchdog closes the open window and opens the closed window.
- No trigger during the open window is invalid WWD triggering.

### Watchdog input WDI

The watchdog input WDI has an integrated pull-down current source $I_{WDI}$. The watchdog input WDI can have a transition to "high" during the closed window or during the subsequent open window.

### Valid trigger signal at WDI

The window watchdog samples the watchdog input WDI periodically with a period of $t_{SAM}$. A falling edge from $W_{WDI,high}$ to $W_{WDI,low}$ is a valid trigger signal. To improve immunity against both noise and glitches on the WDI pin, the device requires at least two "high" samples followed by two "low" samples for a valid trigger signal. Whether the triggering is valid, the window watchdog decides at the time of the second consecutive "low" sampling point. For example, if the first three samples (two "high", one "low") of the trigger pulse at pin WDI are within the closed window and only the fourth sample (the second "low" sample) is in the open window, then the watchdog output WWO indicates valid WWD triggering.

### Invalid triggering at WDI

If the window watchdog does not detect a trigger signal during the open window or if it detects a trigger signal during the closed window, then this is invalid triggering. The watchdog output WDO indicates invalid triggering after no valid trigger during the open window or if it detects a trigger signal during the closed window.

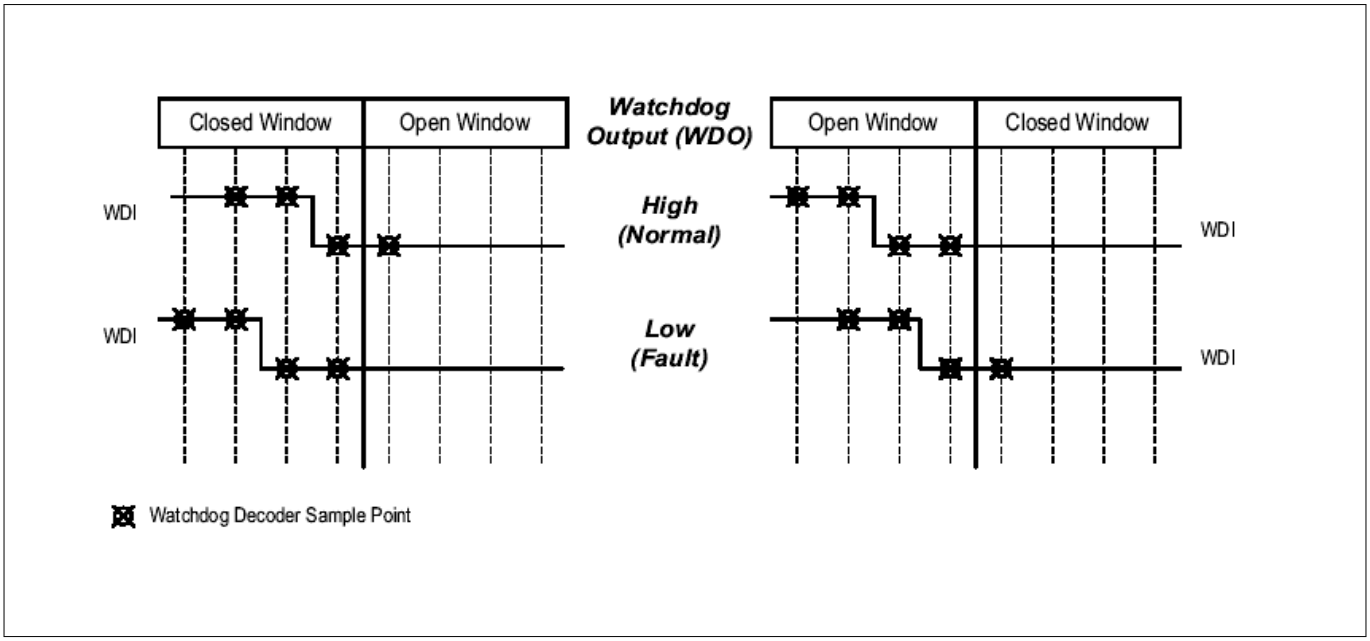


**Figure 15** **Valid and invalid trigger pulses at WDI pin**


Downloaded from Arrow.com.

### 7.5.1 Window watchdog timing

**Normal operation: correct trigger**

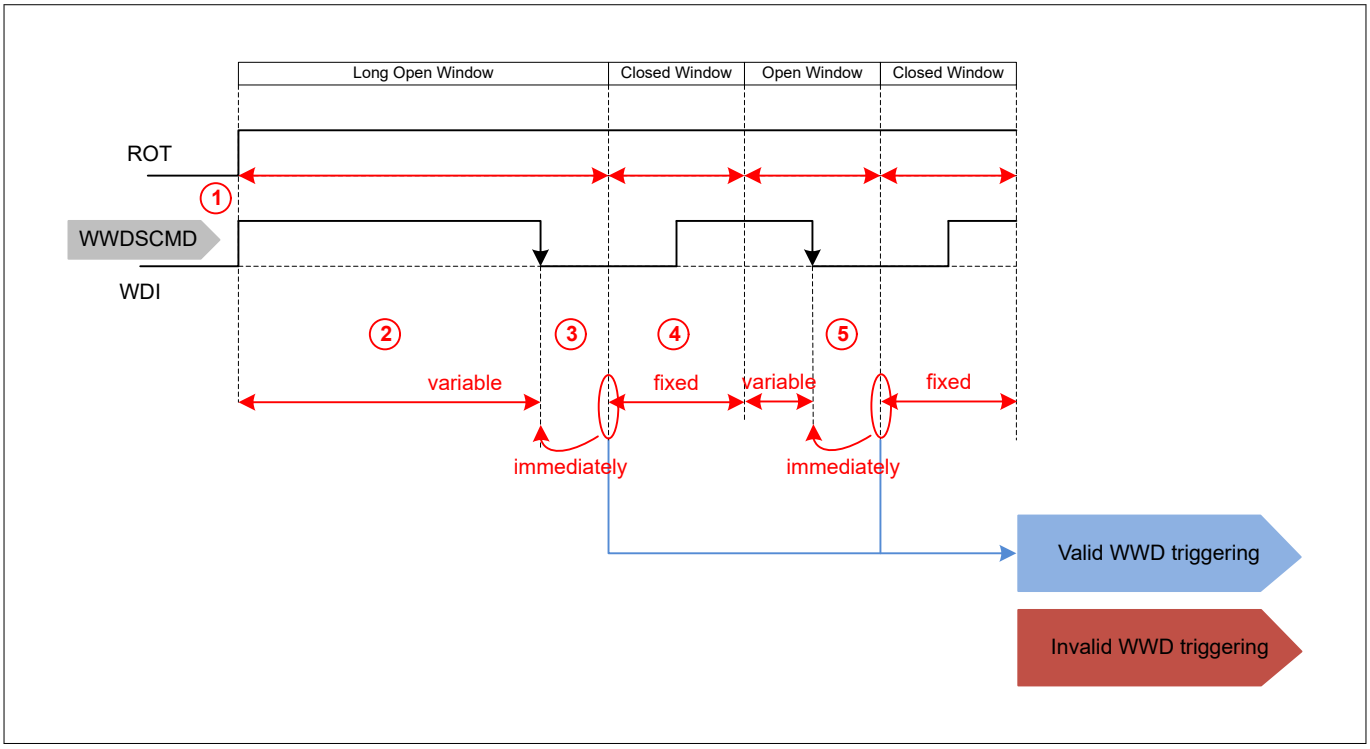


**Figure 16 Normal operation: correct trigger**

1. If the reset output ROT turns to "high" in ACTIVE state, then the window watchdog starts a long open window. The duration of the first long open window depends on the configured cycle time: 600 ms (WDCYC = 1) or 60 ms (WDCYC = 0).
2. During the long open window the window watchdog waits for valid WWD triggering according to the trigger configuration. The maximum duration of the long open window is fixed. On valid WWD triggering the window watchdog terminates the long open window.
3. The window watchdog starts the closed window.
4. The closed window has a fixed duration of $t_{WD,CW}$, which can be configured via SPI. The closed window starts after the valid trigger signal, that terminates the open window or after the long open window. A transition from "low" to "high" at the WDI pin does not lead to a trigger event.
5. On a valid trigger signal the window watchdog terminates the open window. The duration of the open window depends on when the microcontroller schedules the triggering. This is an example of valid WWD triggering.


Downloaded from Arrow.com.

### Fault: no trigger during open window after initialization

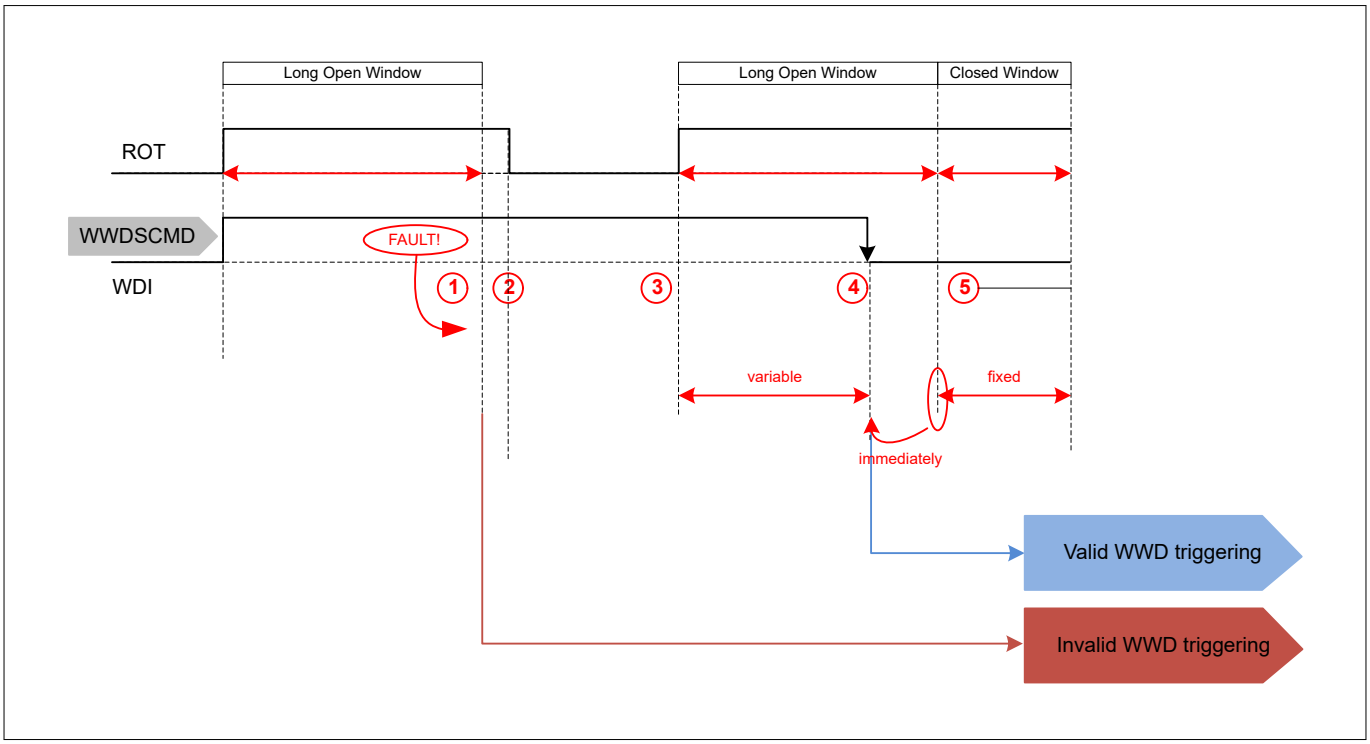


**Figure 17 Fault operation: No trigger in open window after initialization**

1. The initialization timeout usually finishes slightly before or at the same time as the long open window, which skips the interrupt event. However, the missing valid triggering within the long open window can still lead to an interrupt event after the long open window terminates, which increases the window watchdog error counter by two.
2. The initialization timer expires for the first time. As the window watchdog does not detect valid triggering during ACTIVE state, it generates a soft reset: The device sets ROT to "low", while the output voltages of the post regulators remain on.
3. After the soft reset the pin ROT turns "high" after the power-on reset delay time $t_{rd}$. The window watchdog opens a long open window, so the microcontroller gets the opportunity to trigger and synchronize to the watchdog period.
4. On valid triggering the window watchdog terminates the open window. The duration of the open window depends on when the triggering occurs. Due to the valid WWD triggering the window watchdog starts a closed window and it decrements the window watchdog error counter by 1.
5. The subsequent closed window lasts for the time $t_{WD,CW}$. Triggering within this closed window is invalid WWD triggering.


Downloaded from Arrow.com.

### Fault: no trigger during open window in steady state

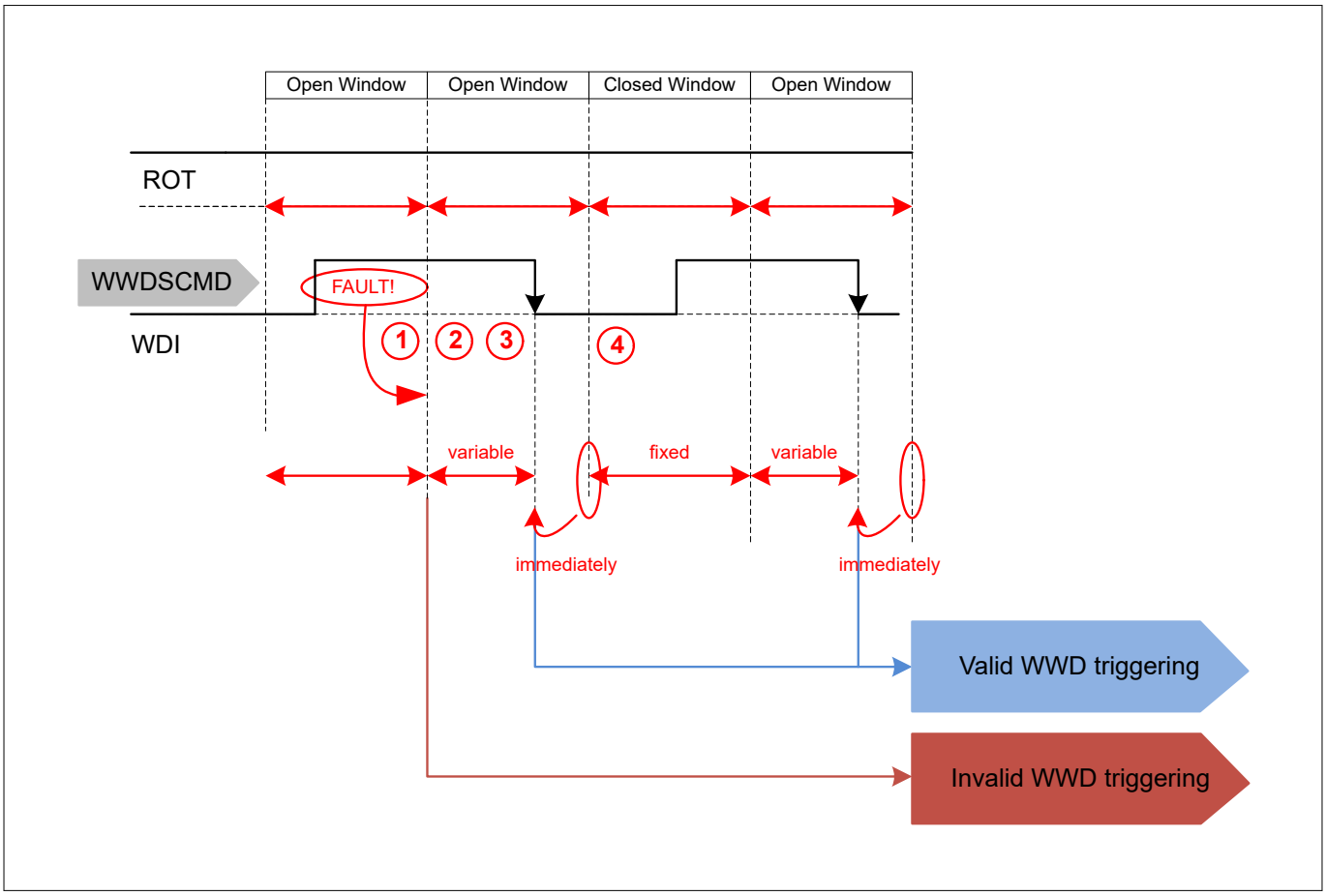


**Figure 18** **Fault operation: no trigger in open window in steady state**

1. If the window watchdog does not detect valid triggering during the entire open window, then it recognizes invalid WWD triggering. The window watchdog indicates this event by an interrupt and it increases the window watchdog error counter by 2.
2. After the invalid WWD triggering the window watchdog starts a new open window with the duration $t_{WD,OW}$ so the microcontroller gets the opportunity to trigger and tosynchronize to the watchdog period.
3. On valid triggering the window watchdog terminates the open window. The duration of the open window depends on when the triggering occurs. Due to the valid WWD triggering the window watchdog starts a closed window and it decrements the window watchdog error counter by 1. If multiple invalid WWD triggering occurs during the open windows, then the window watchdog increases the window watchdog error counter by 2 each time, until it reaches the configured threshold and then generates a reset.
4. The subsequent closed window lasts for the time $t_{WD,CW}$. Triggering during the closed window is invalid WWD triggering.

The behavior of pin ROT depends on the configured value of the window watchdog error counter threshold ΣWWO (RWDCFG0.WWDETHR). In this example the amount of invalid triggering does not exceed that threshold.



Downloaded from Arrow.com.

### Fault: wrong trigger during closed window after initialization

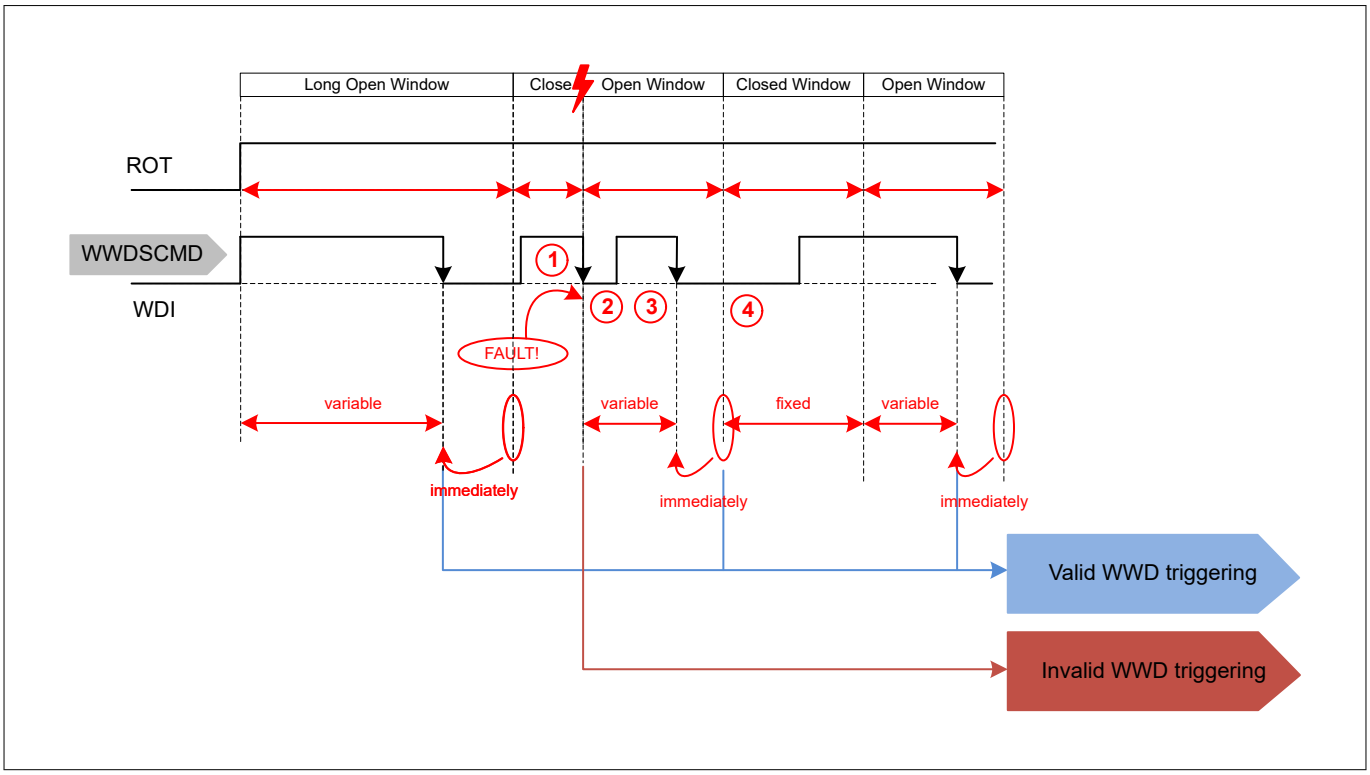


**Figure 19** **Fault operation: wrong trigger in closed window after initialization**

1. Triggering during the closed window is invalid WWD triggering. The window watchdog indicates this event by an interrupt and it increases the window watchdog error counter by 2.
2. Due to the invalid WWD triggering the window watchdog terminates the closed window before the time $t_{WD,CW}$ expires. The window watchdog starts an open window, so the microprocessor gets the opportunity to synchronize to the window watchdog period.
3. During this open window the window watchdog waits for valid triggering. On valid triggering the window watchdog terminates the open window. The duration of the open window depends on when the triggering occurs. Due to the valid triggering the window watchdog starts a closed window and it decrements the window watchdog error counter by 1.
4. The subsequent closed window lasts for the time $t_{WD,CW}$. Triggering during the closed window is invalid WWD triggering.

The behavior of pin ROT depends on the configured value of the window watchdog error counter threshold ΣWWO (RWDCFG0.WWDETHR). In this example the amount of invalid triggering does not exceed that threshold.



Downloaded from Arrow.com.

### Fault: wrong trigger during closed window in steady state

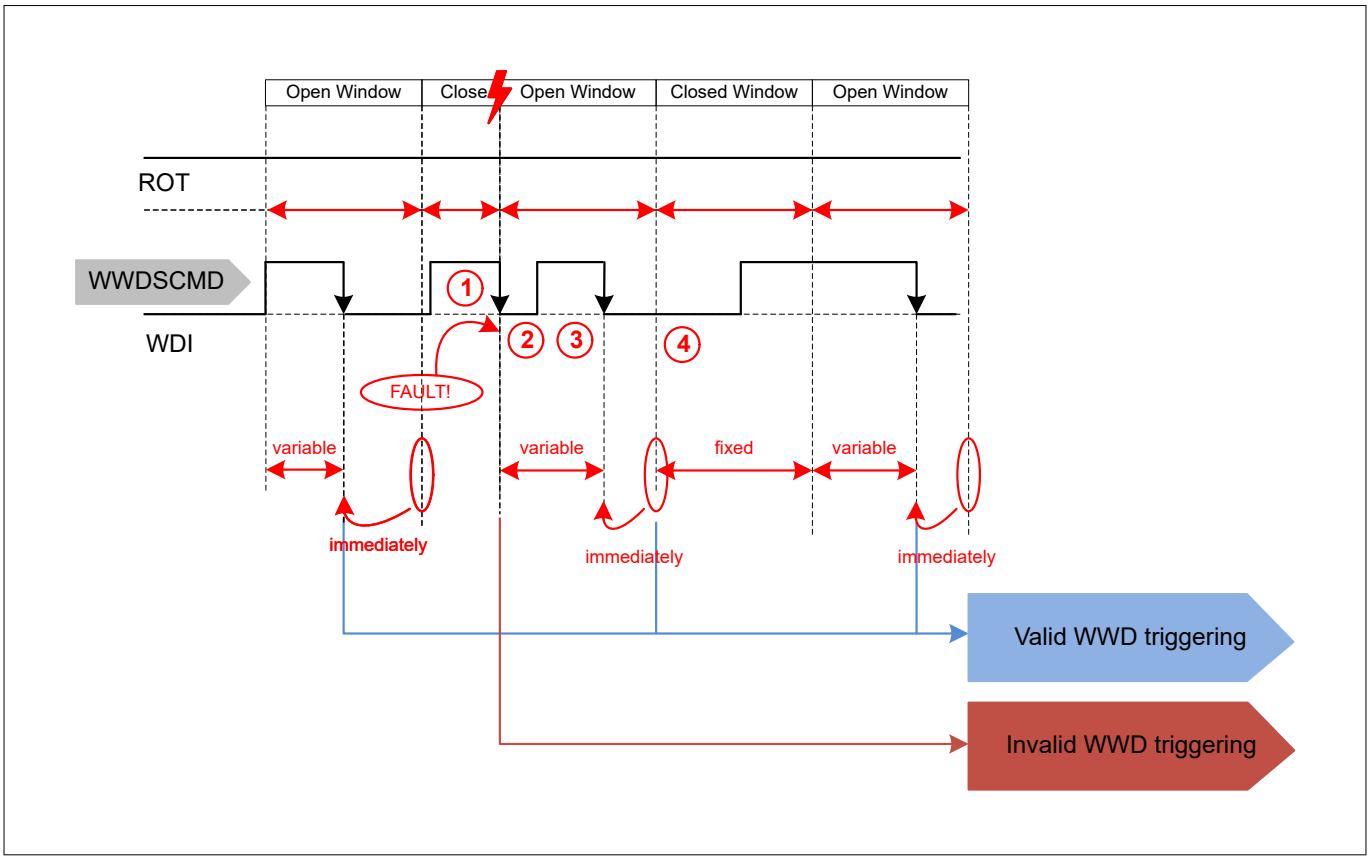


**Figure 20** **Fault operation: wrong trigger in closed window in steady state**

1. Triggering during the closed window is invalid WWD triggering. The window watchdog indicates this event by an interrupt and it increases the window watchdog error counter by 2.
2. Due to the invalid WWD triggering the window watchdog terminates the closed window before the time $t_{WD,CW}$ expires. The window watchdog starts an open window, so the microprocessor gets the opportunity to synchronize to the window watchdog period.
3. During this open window the window watchdog waits for valid triggering. On valid triggering the window watchdog terminates the open window. The duration of the open window depends on when the triggering occurs. Due to the valid triggering the window watchdog starts a closed window and it decrements the window watchdog error counter by 1.
4. The subsequent closed window lasts for the time $t_{WD,CW}$. Triggering during the closed window is invalid WWD triggering.

The behavior of pin ROT depends on the configured value of the window watchdog error counter threshold ΣWWO (RWDCFG0.WWDETHR). In this example the amount of invalid triggering does not exceed that threshold.



Downloaded from Arrow.com.

### 7.5.2 Electrical characteristics window watchdog

**Table 21 Electrical characteristics window watchdog**

$T_j$ = -40°C to 150°C; $V_{R1VSx}$ = 3.7 V to 35 V; all voltages with respect to ground, positive current flowing into pin (unless otherwise specified)

| Parameter | Symbol | Values | | | Unit | Note or condition | Number |
|---|---|---|---|---|---|---|---|
| | | Min. | Typ. | Max. | | | |
| Watchdog cycle time, configuration option 0 | $t_{WDCYC}$ | 9.5 | 10 | 10.5 | µs | – | P_7.5.1.1 |
| Watchdog cycle time, configuration option 1 | $t_{WDCYC}$ | 95 | 100 | 105 | µs | – | P_7.5.1.2 |
| Long open window time | $t_{LOW}$ | 570 | 600 | 630 | ms | – | P_7.5.1.3 |
| **Watchdog input WDI** | | | | | | | |
| Watchdog sampling time | $t_{WDI_filter}$ | 380 | 400 | 420 | µs | – | P_7.5.1.4 |
| Valid input level "high" | $V_{WDI, high}$ | 0.7 | – | – | $V_{IOVDD}$ | $V_{WDI}$ increasing | P_7.5.1.5 |
| Valid input level "low" | $V_{WDI, low}$ | – | – | 0.8 | V | $V_{WDI}$ decreasing | P_7.5.1.6 |
| Input hysteresis | $V_{WDI, hyst}$ | – | 0.06 | – | $V_{IOVDD}$ | – | P_7.5.1.7 |
| Pull-down current | $I_{WDI}$ | – | 135 | 330 | µA | – | P_7.5.1.8 |
| Input capacitance | $C_{WDI}$ | – | 4 | 15 | pF | 1) | P_7.5.1.9 |

1) Not subject to production test, specified by design.

## 7.6 Microcontroller programming mode

The device includes a feature to support programming of microcontroller firmware during production or in the field by preventing periodic reset triggering during the initialization period.

The programming mode can be enabled by pulling the MPS pin "high". In programming mode the reset generation to the microcontroller is modified, so that fault events of microcontroller monitoring features do not generate a microcontroller reset. All other monitoring features that generate a microcontroller reset are still active, see Table 25. The interrupt generation and the state transitions are still active. However, the initialization timer is disabled, so that the device can remain in ACTIVE state.

Operation of the internal state machine and the programming mode are independent, which allows the transition to any state while the microcontroller programming mode is active. However, the microcontroller monitoring is still active and will move the device into ACTIVE state. Therefore, leave the device in ACTIVE state during a programming operation.

Voltage monitoring is active and generates the respective fault events. This may generate interrupts or move the device into FAULT state depending on the nature of the event.



Downloaded from Arrow.com.

### 7.6.1 Electrical characteristics microcontroller programming mode

**Table 22 Electrical characteristics microcontroller programming mode**

$T_j$ = -40°C to 150°C; $V_{R1VSx}$ = 3.7 V to 35 V; all voltages with respect to ground, positive current flowing into pin (unless otherwise specified)

| Parameter | Symbol | Values | | | Unit | Note or condition | Number |
|---|---|---|---|---|---|---|---|
| | | Min. | Typ. | Max. | | | |
| **MPS pin** | | | | | | | |
| Valid input level "high" | $V_{MPS, high}$ | 2.4 | – | – | V | $V_{MPS}$ increasing | P_7.8.0.1 |
| Valid input level "low" | $V_{MPS, low}$ | – | – | 0.8 | V | $V_{MPS}$ decreasing | P_7.8.0.2 |
| Input hysteresis | $V_{MPS, hys}$ | – | 350 | – | mV | 1) | P_7.8.0.3 |
| Pull-down current | $I_{MPS}$ | – | 140 | 330 | µA | $V_{MPS}$ = 5.0 V | P_7.8.0.4 |
| Input capacitance | $C_{MPS}$ | – | 4 | 15 | pF | 1) | P_7.8.0.5 |

1) Not subject to production test, specified by design.



Downloaded from Arrow.com.

# 8 State machine

## 8.1 State machine introduction

The integrated state machine controls operation in different situations. Figure 21 shows the complete state-diagram. Table 23 and Table 24 describe each state and the transitions.

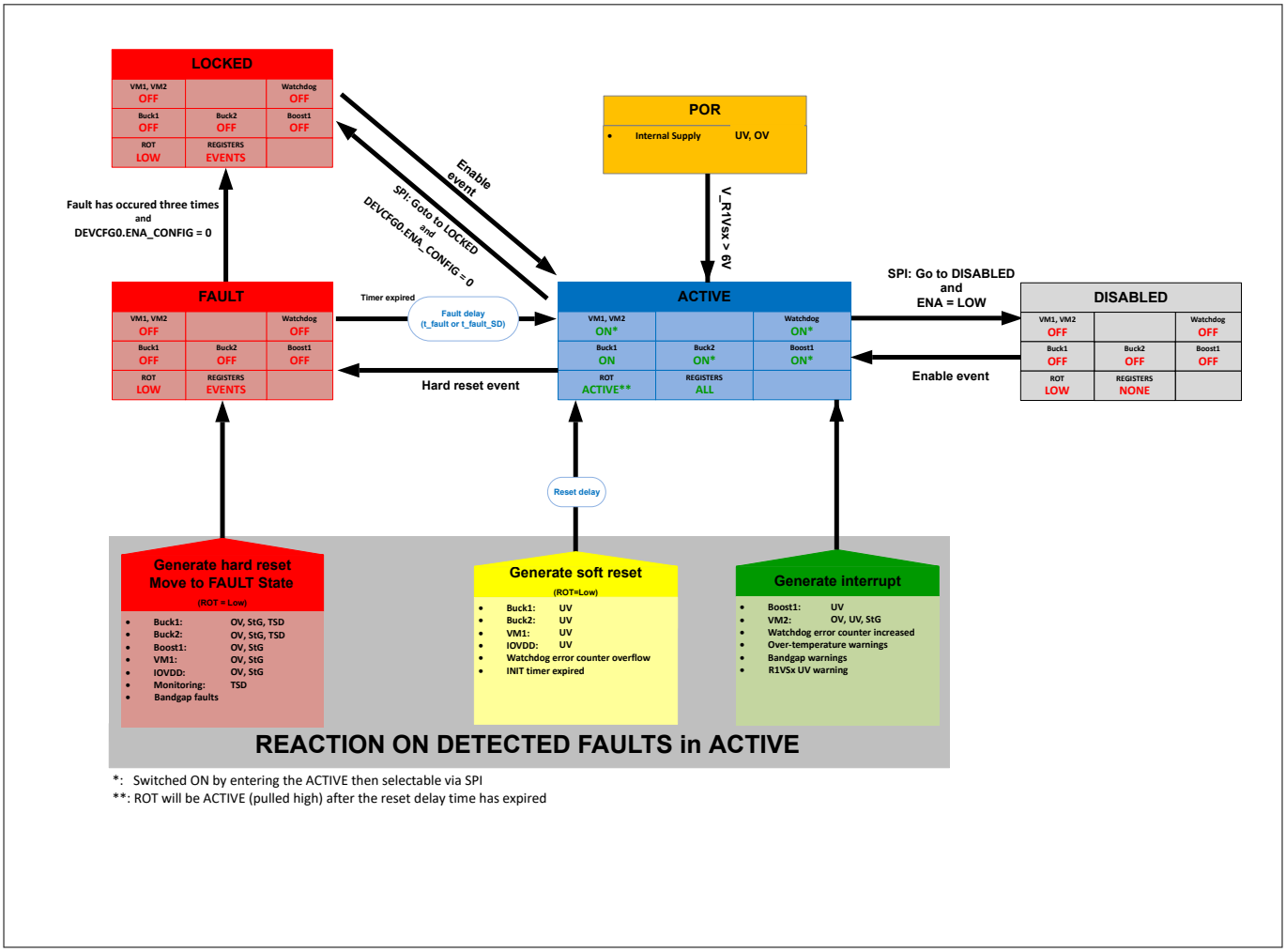


**Figure 21 State machine**



Downloaded from Arrow.com.

## 8.2 Operation states

### ACTIVE

The ACTIVE state is the first state that the device enters after power-on. The device powers up all voltage rails and expects to receive configuration from the microcontroller within the initialization time window according to the INIT timer.

On deactivation of the microcontroller reset the INIT timer starts. If the following conditions are fulfilled, then the INIT timer stops:

- The device receives valid SPI communication from the microcontroller.
- The window watchdog is serviced once according to its configuration.

If the INIT timer is not stopped and expires, then the device detects an initialization error. The first initialization error triggers a soft reset, which activates the reset signal ROT, but no state transition. The second initialization error triggers a hard reset, which activates the reset signal ROT and shuts down the supply rails, thus the device enters FAULT state and the system restarts.

The microcontroller can request a transition from ACTIVE state to either DISABLED state or LOCKED state via an SPI command. On an SPI request to change the state to DISABLED or LOCKED the device enters the FAULT state for 20 ms before it enters the requested state. This is done to ensure a proper discharge of the output voltages of all switching regulators before the device is be enabled again.

### DISABLED

During DISABLED state the device is powered off and it only monitors the enable signal (ENA) for a valid enable condition. Once a valid enable event is detected, the device enters ACTIVE state and expects configuration from the microcontroller. In DISABLED state the device resets the content of all registers. The device needs to be configured again during the ACTIVE state.

### FAULT

On detection of a severe fault the device enters FAULT state. In FAULT state all regulators are switched off and the microcontroller reset (ROT) is asserted. The device remains in FAULT state for the specified fault time prior to a transition into ACTIVE state. In FAULT state the device retains event registers to store the reason for entering the FAULT state. The device resets all other registers.

A soft reset condition on the first detection of a fault condition triggers the reset signal ROT, but no state transition. If the device detects the same soft reset fault condition again, then it increases the severity of the fault to a severe fault. In this case the device enters the FAULT state. This applies for all soft reset faults except the window watchdog error counter overflow.

### LOCKED

The device enters LOCKED state after three severe faults, brought on by expiration of the initialization counter or by request of the microcontroller. The power consumption in LOCKED state is reduced. The device remains in LOCKED state until it detects the next valid enable event. In LOCKED state the device only retains a limited set of the event registers to store the reason for entering the LOCKED state. The device resets all other registers.

**Table 23 Operational states functional overview.**

| | ACTIVE | | FAULT | | LOCKED | | DISABLED | |
|---|---|---|---|---|---|---|---|---|
| **Block or function** | | | | | | | | |
| Buck1 | on | R | off | R | off | R | off | R |
| Buck2 | on | RW | off | R | off | R | off | R |
| Boost1 | on | RW | off | R | off | R | off | R |
| VM1 | on | RW | off | R | off | R | off | R |

**(table continues...)**



Downloaded from Arrow.com.

**Table 23 (continued) Operational states functional overview.**

| | ACTIVE | | FAULT | | LOCKED | | DISABLED | |
|---|---|---|---|---|---|---|---|---|
| **Block or function** | | | | | | | | |
| VM2 | on | RW | off | R | off | R | off | R |
| – | – | – | – | – | – | – | – | – |
| Window watchdog | on | RW | off | R | off | R | off | R |
| – | – | – | – | – | – | – | – | – |
| Microcontroller reset – ROT | ACTIVE | R | "low" | R | "low" | R | "low" | R |
| Persistent registers | All registers | - | Event registers | - | Event registers | - | - | - |

- on: The function is automatically activated when entering the state . The Function may be configured via SPI within the current state.
- SEL: The function is operating as configured via SPI (during the mode transition or within the current operation mode).
- off: The function is automatically deactivated when entering the operation mode.
- R: The state of the feature cannot be changed in the current operation mode.
- RW: The state of the feature can be changed in the current operation mode.
- "high": The signal is "high" in this operation mode.
- "low": The signal is "low" in this operation mode.
- ACTIVE: The reset signal may generate a reset event (edge) in this operation mode.


Downloaded from Arrow.com.

## 8.3 State transitions and trigger signals

This section describes the state transitions of the integrated state machine.

Table 24 shows the static state transitions with the respective source and destination states, the condition required to trigger the state transition and a transition specific action executed during the transition.

Each row refers to one state transition. With multiple conditions in the same row all of the conditions must be met.

**Table 24 State transitions**

| Source | Destination | Condition | Action |
|---|---|---|---|
| Unpowered | ACTIVE | Device supplied<br>First POR event | – |
| ACTIVE | DISABLED | SPI command and ENA = "low" | – |
| ACTIVE | LOCKED | SPI command and ENA_CONFIG = 0 | – |
| ACTIVE | FAULT | Hard reset fault detected | – |
| DISABLED | ACTIVE | Enable event | Generate MCU reset |
| FAULT | ACTIVE | FAULT timer expires | Generate MCU reset |
| FAULT | LOCKED | [1] Hard reset fault occurs three times | – |
| LOCKED | ACTIVE | Enable event | Generate MCU reset |

1) The ENA pin must either be configured as edge-triggered or the ENA pin must be "low" to trigger the transition from FAULT to LOCKED state.

Table 25 and Table 26 show the mapping between the fault events and the associated actions.

**Table 25 Event response mapping – voltage rails**

| Event | Move to FAULT | Move to ACTIVE; Generate RESET | Move to DISABLED | No transition; Generate interrupt |
|---|---|---|---|---|
| **Buck1** | | | | |
| Buck1: OV | X | – | – | – |
| Buck1: UV | – | X | – | – |
| Buck1: StG | X | – | – | – |
| **Buck2** | | | | |
| Buck2: OV | X | – | – | – |
| Buck2: UV | – | X | – | – |
| Buck2: StG | X | – | – | – |
| **Boost1** | | | | |
| Boost1: OV | X | – | – | – |

**(table continues...)**



Downloaded from Arrow.com.

**Table 25 (continued) Event response mapping – voltage rails**

| Event | Move to FAULT | Move to ACTIVE; Generate RESET | Move to DISABLED | No transition; Generate interrupt |
|---|---|---|---|---|
| Boost1: UV | – | – | – | X |
| Boost1: StG | X | – | – | – |
| **VM1** | | | | |
| VM1: OV | X | – | – | – |
| VM1: UV | – | X | – | – |
| VM1: StG | X | – | – | – |
| **VM2** | | | | |
| VM2: OV | – | – | – | X |
| VM2: UV | – | – | – | X |
| VM2: StG | – | – | – | X |

**Table 26 Event response mapping – other events**

| Event | Move to FAULT | Move to ACTIVE; Generate RESET | Move to DISABLED | No transition; Generate interrupt |
|---|---|---|---|---|
| WWD: counter increase | – | – | – | X |
| WWD: counter overflow | – | X | – | – |
| INIT timer expired – first time | – | X | – | – |
| INIT timer expired – second time | X | – | – | – |
| – | – | – | – | – |
| Internal protection: band gap warning | – | – | – | X |
| Internal protection: band gap fault | X | – | – | – |
| IOVDD: OV | X | – | – | – |
| IOVDD: UV | – | X | – | – |
| IOVDD: StG | X | – | – | – |
| Internal protection: internal supplies (UV,OV) | – | [1] X | – | – |
| – | – | – | – | – |
| Buck1: OT warning | – | – | – | X |
| Buck1: OT fault | X | – | – | – |
| Buck2: OT warning | – | – | – | X |
| Buck2: OT fault | X | – | – | – |

**(table continues...)**



Downloaded from Arrow.com.

**Table 26 (continued) Event response mapping – other events**

| Event | Move to FAULT | Move to ACTIVE; Generate RESET | Move to DISABLED | No transition; Generate interrupt |
|---|---|---|---|---|
| Monitoring: OT warning | – | – | – | X |
| Monitoring: OT fault | X | – | – | – |

*1)* If the TLF30682QVS01 detects an UV or OV fault condition on the internal supplies, then it turns off completely. The TLF30682QVS01 enters the ACTIVE state when the UV or OV condition is no longer present.

Figure 22 shows the timing of soft reset generation and hard reset generation after an initialization error.

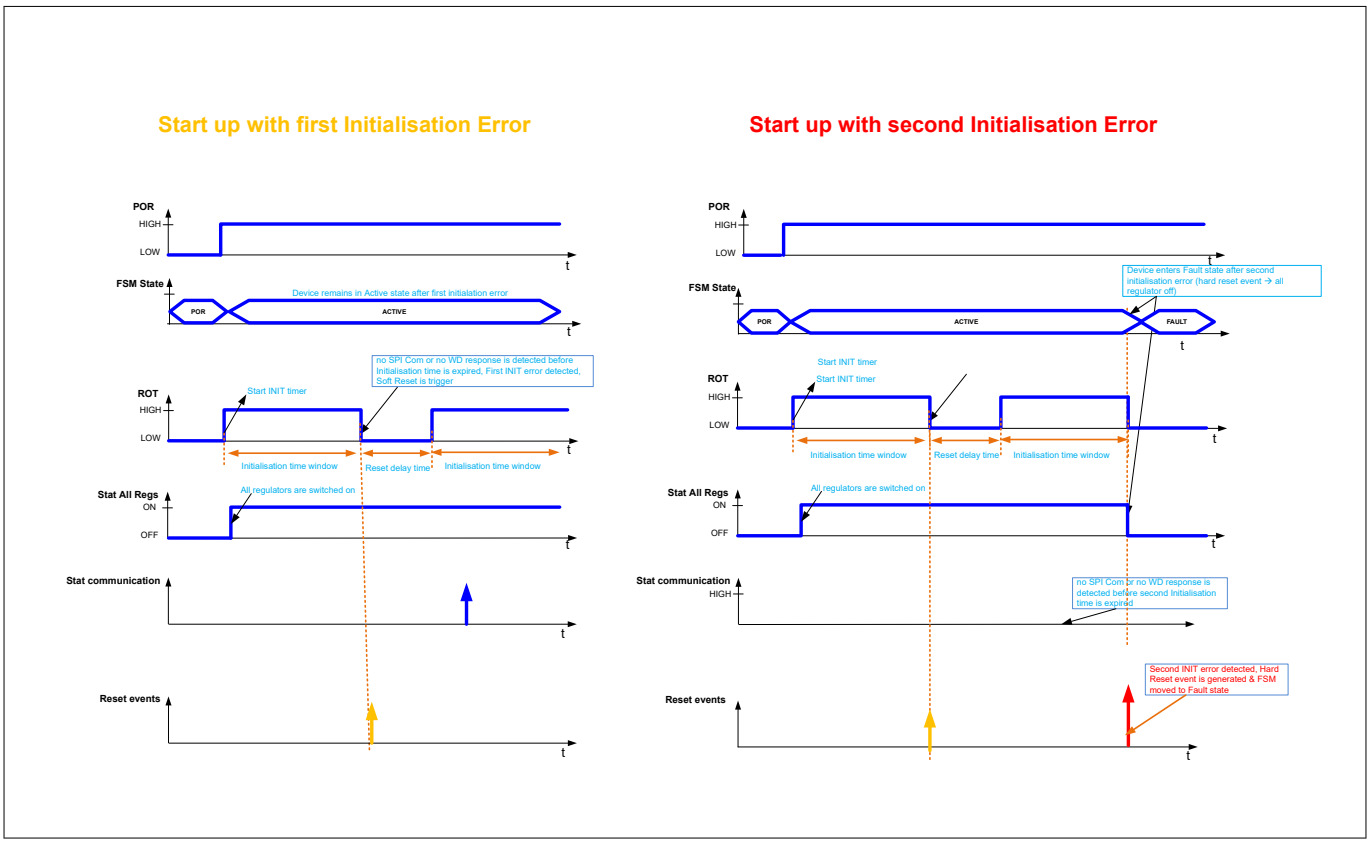


**Figure 22 Reset generation timing**

Figure 23 shows the reset counter and the transition to LOCKED mode after three initializations failure.



Downloaded from Arrow.com.

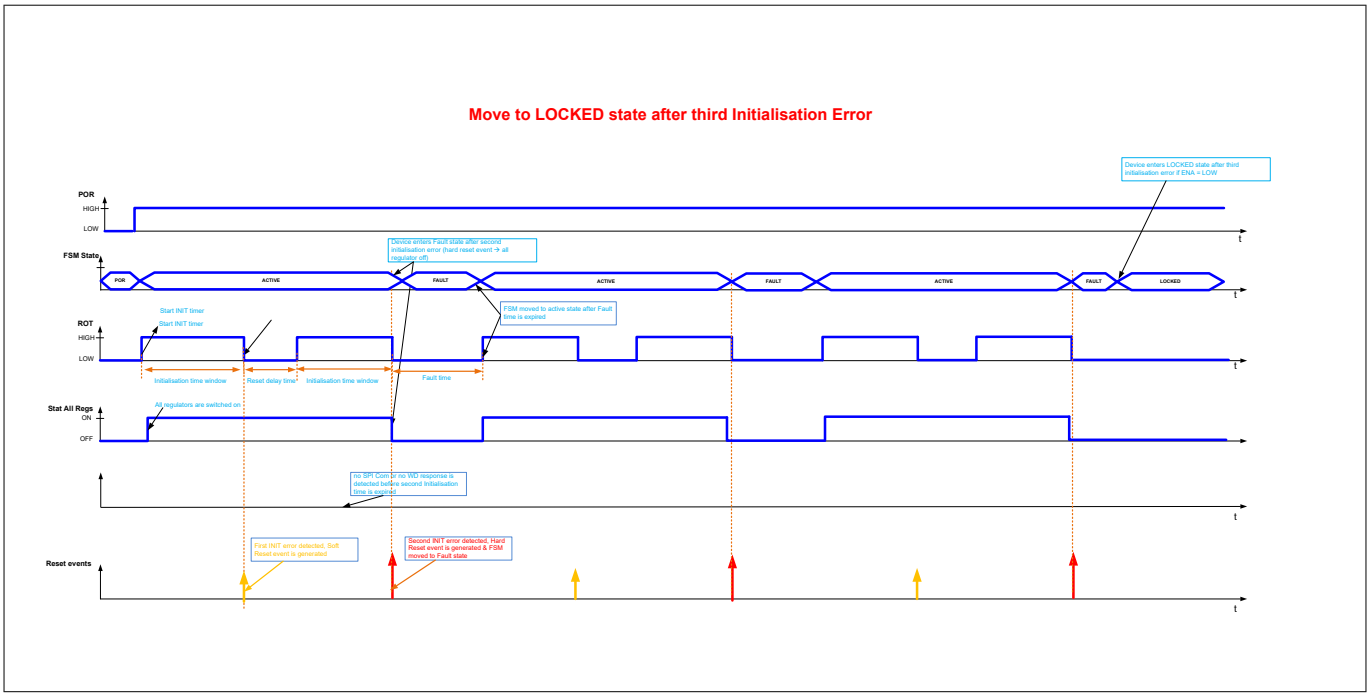


**Figure 23** **Hard reset counter**

## 8.4 Electrical characteristics state machine

**Table 27** **Electrical characteristics state machine**

$T_j$ = -40°C to 150°C; $V_{R1VSx}$ = 3.7 V to 35 V; all voltages with respect to ground, positive current flowing into pin (unless otherwise specified)

| Parameter | Symbol | Values | | | Unit | Note or condition | Number |
|---|---|---|---|---|---|---|---|
| | | Min. | Typ. | Max. | | | |
| Initialization timeout (INIT timer) | $t_{INIT}$ | 550 | 600 | 650 | ms | – | |
| Fault time | $t_{Fault}$ | – | 20 | – | ms | – | |
| Fault time TSD | $t_{Fault,TSD}$ | – | 1000 | – | ms | – | |
| State transition time | $t_{trans}$ | – | – | 100 | µs | – | |



Downloaded from Arrow.com.

# 9 SPI registers

**Table 28 Abbreviations**

| | |
|---|---|
| R0 | Register is reset on a POR event and on a transition into DISABLED state. |
| R1 | Register is reset with reset class R0 and additionally on a transition into LOCKED state. |
| R2 | Register is reset with reset class R1 and additionally on a microcontroller reset. |
| r | Bit is readable (read-only). |
| rw | Bit is readable and writable (read-write). |
| rw1p | Bit is protected. Read data is inverted. Write via LOCK/UNLOCK mechanism only. |
| rw1c | Bit is readable and can be cleared by a write operation with 1.<br>Bit is updated based on hardware inputs (flags). |
| rwhc | Bit is readable and writable. After a write operation with 1 an operation is triggered which upon its completion sets the bit to 0. |
| rwhu | Bit is readable and writable.<br>Bit is updated based on hardware inputs (flags). |

**Table 29 Register overview**

| Register ID | Description | Address | Reset Value | Reset Class | Page |
|---|---|---|---|---|---|
| DEVCFG0 | Device configuration 0 | 00H | F3H | R0 | Page 88 |
| CLKCFG0 | Clock configuration 0 | 01H | 00H | R2 | Page 89 |
| CLKCFG1 | Clock configuration 1 | 02H | 04H | R2 | Page 90 |
| PROTCFG | Configuration protection | 03H | 00H | R2 | Page 102 |
| PWDCFG0 | Protected watchdog configuration 0 | 06H | 9BH | R2 | Page 91 |
| RWDCFG0 | Read-only watchdog configuration 0 | 07H | 9BH | R2 | Page 94 |
| PWDCFG1 | Protected watchdog configuration 1 | 08H | 46H | R2 | Page 92 |
| RWDCFG1 | Read-only watchdog configuration 1 | 09H | 46H | R2 | Page 95 |
| PWDCFG2 | Protected Watchdog Configuration 2 | 0AH | 78H | R2 | Page 93 |
| RWDCFG2 | Read-only watchdog configuration 2 | 0BH | 78H | R2 | Page 96 |
| B2VCTRL | Buck2 output voltage control | 10H | 02H | R1 | Page 100 |
| B2VCTRLN | Buck2 output voltage control inverted | 11H | 0DH | R1 | Page 101 |
| GSF | Global status flags | 1AH | 00H | R0 | Page 104 |
| SYSSF0-QM | System status flags – faults | 1BH | 00H | R0 | Page 106 |
| SYSSF1-QM | System status flags – interrupts | 1CH | 00H | R1 | Page 107 |
| MCUSF0-QM | Microcontroller status flags 0 – faults | 1DH | 00H | R0 | Page 108 |
| MCUSF1-QM | Microcontroller status flags 1 – warnings | 1EH | 00H | R1 | Page 109 |
| SPISF | SPI status flags | 1FH | 00H | R1 | Page 110 |

**(table continues...)**



Downloaded from Arrow.com.

**Table 29 (continued) Register overview**

| Register ID | Description | Address | Reset Value | Reset Class | Page |
|---|---|---|---|---|---|
| MONSF0 | Voltage monitoring status flags 0 – short to ground | 20H | 00H | R0 | Page 111 |
| MONSF1 | Voltage monitoring status flags 1 – overvoltage | 21H | 00H | R0 | Page 112 |
| MONSF2 | Voltage monitoring status flags 2 – undervoltage | 22H | 00H | R0 | Page 113 |
| OTSF0 | Overtemperature events 0 – faults | 23H | 00H | R0 | Page 114 |
| OTSF1 | Overtemperature flags 1 – warnings | 24H | 00H | R1 | Page 115 |
| OCSF1 | Overcurrent flags – warnings | 25H | 00H | R1 | Page 116 |
| OTSTAT0 | Overtemperature status 0 – warnings | 26H | 00H | R1 | Page 117 |
| VMONSTAT0 | Voltage monitoring | 27H | 00H | R1 | Page 118 |
| DEVSTAT | Device state information | 28H | 00H | R1 | Page 119 |
| PROTSTAT | Protection status information | 29H | 01H | R2 | Page 120 |
| WWDSTAT | Window watchdog status information | 2AH | 00H | R2 | Page 121 |
| WWDSCMD | Window watchdog service command | 33H | 00H | R2 | Page 103 |
| DEVCTRL | Device state control | 34H | 00H | R1 | Page 98 |
| DEVCTRLN | Device state control inverted | 35H | 00H | R1 | Page 99 |
| MPSSTAT0 | Microcontroller programming support status information | 37H | 03H | R1 | Page 122 |
| B2VSTAT | Buck2 output voltage status | 39H | 02H | R1 | Page 123 |
| HWDECT0 | Hardware option information | 3BH | D3H | R1 | Page 125 |
| DEVID | Device identification | 3CH | 10H | R1 | Page 126 |


Downloaded from Arrow.com.

## 9.1 SPI register definition

### 9.1.1 Device configuration registers (device startup default configuration)



Downloaded from Arrow.com.

### 9.1.1.1 Register DEVCFG0

**DEVCFG0** RMAP: 1 Address: $00_H$

Device configuration 0 PAGE: 0 Reset Value: $F3_H$

| 7 | 6 | 5 | 4 | 3 | 2 | 1 | 0 |
|---|---|---|---|---|---|---|---|
| **VM2ENAS** | **VM1ENAS** | **BOOST1ENAS** | **BUCK2ENAS** | **ENA_CONFIG** | **RESDEL** | | |
| r | r | r | r | rw | rw | | |

| Field | Bits | Type | Description |
|---|---|---|---|
| VM2ENAS | 7 | r | **External voltage monitoring 2 enable at start up**<br>$0_H$ , disabled<br>$1_H$ , enabled<br>Reset: $1_H$ |
| VM1ENAS | 6 | r | **External voltage monitoring 1 enable at start up**<br>$0_H$ , disabled<br>$1_H$ , enabled<br>Reset: $1_H$ |
| BOOST1ENAS | 5 | r | **Boost1 enable at start up**<br>$0_H$ , disabled<br>$1_H$ , enabled<br>Reset: $1_H$ |
| BUCK2ENAS | 4 | r | **Buck2 enable at start up**<br>$0_H$ , disabled<br>$1_H$ , enabled<br>Reset: $1_H$ |
| ENA_CONFIG | 3 | rw | **ENA pin configuration**<br>$0_H$ , edge triggered<br>$1_H$ , level sensitive<br>Reset: $0_H$ |
| RESDEL | 2:0 | rw | **Reset release delay time**<br>$00_H$ , 200 µs<br>$01_H$ , 400 µs<br>$02_H$ , 800 µs<br>$03_H$ , 1 ms<br>$04_H$ , 2 ms<br>$05_H$ , 4 ms<br>$06_H$ , 10 ms<br>$07_H$ , 20 ms<br>Reset: $03_H$ |



Downloaded from Arrow.com.

### 9.1.1.2 Register CLKCFG0

**CLKCFG0** RMAP: X Address: $01_H$

Clock configuration 0 PAGE: 2 Reset Value: $00_H$

| 7 | 6 | 5 | 4 | 3 | 2 | 1 | 0 |
|---|---|---|---|---|---|---|---|
| **nu** | **PHBUCK2** | **PHBUCK1** | **PHSO** | **nu** | **SSEN** | **SIEN** | **SOEN** |
| r | rw | rw | rw | r | rw | rwhc | rw |

| Field | Bits | Type | Description |
|---|---|---|---|
| nu | 7 | r | **Not used** |
| PHBUCK2 | 6 | rw | **Buck2 phase alignment**<br>$0_H$ , 0° phase shift<br>$1_H$ , 180° phase shift<br>Reset: $0_H$ |
| PHBUCK1 | 5 | rw | **Buck1 phase alignment**<br>$0_H$ , 0° phase shift<br>$1_H$ , 180° phase shift<br>Reset: $0_H$ |
| PHSO | 4 | rw | **External clock synchronization phase alignment**<br>$0_H$ , 0° phase shift<br>$1_H$ , 180° phase shift<br>Reset: $0_H$ |
| nu | 3 | r | **Not used** |
| SSEN | 2 | rw | **Spread spectrum modulation enable**<br>$0_H$ , disabled<br>$1_H$ , enabled<br>Reset: $0_H$ |
| SIEN | 1 | rwhc | **External clock synchronization input enable**<br>$0_H$ , disabled<br>$1_H$ , enabled<br>Reset: $0_H$ |
| SOEN | 0 | rw | **External clock synchronization output enable**<br>$0_H$ , disabled<br>$1_H$ , enabled<br>Reset: $0_H$ |


Downloaded from Arrow.com.

### 9.1.1.3 Register CLKCFG1

**CLKCFG1** RMAP: X Address: $02_H$

Clock configuration 1 PAGE: 2 Reset Value: $04_H$

| 7 | 6 | 5 | 4 | 3 | 2 | 1 | 0 |
|---|---|---|---|---|---|---|---|
| **nu** | | | | | **FREQSEL** | | |
| r | | | | | rw | | |

| Field | Bits | Type | Description |
|---|---|---|---|
| nu | 7:3 | r | **Not used** |
| FREQSEL | 2:0 | rw | **Main switching frequency**<br>$0_H$ , 1.8 MHz<br>$1_H$ , 1.9 MHz<br>$2_H$ , 2.0 MHz<br>$3_H$ , 2.1 MHz<br>$4_H$ , 2.2 MHz<br>$5_H$ , 2.3 MHz<br>$6_H$ , 2.4 MHz<br>$7_H$ , 2.5 MHz<br>Reset: $4_H$ |



Downloaded from Arrow.com.

### 9.1.1.4 Register PWDCFG0

**PWDCFG0** RMAP: X Address: $06_H$

Protected watchdog configuration 0 PAGE: 2 Reset Value: $9B_H$

| 7 | 6 | 5 | 4 | 3 | 2 | 1 | 0 |
|---|---|---|---|---|---|---|---|
| **WWDETHR** | | | | **WWDEN** | **nu** | **WWDTSEL** | **WDCYC** |
| rwp | | | | rwp | r | rwp | rwp |

| Field | Bits | Type | Description |
|---|---|---|---|
| WWDETHR | 7:4 | rwp | **Window watchdog error threshold**<br>$0_H$ 0<br>$1_H$ 1<br>...<br>$F_H$ 15<br>Reset: $9_H$ |
| WWDEN | 3 | rwp | **Window watchdog enable**<br>$0_B$ , disabled<br>$1_B$ , enabled<br>$1_B$ Reset: |
| nu | 2 | r | **Not used** |
| WWDTSEL | 1 | rwp | **Window watchdog trigger selection**<br>$0_B$ , external WDI input used as WWD trigger<br>$1_B$ , WWD is triggered by SPI write to WWDSCMD register<br>$1_B$ Reset: |
| WDCYC | 0 | rwp | **Watchdog cycle time**<br>$0_B$ , 10 µs tick period<br>$1_B$ , 100 µs tick period<br>$1_B$ Reset: |



Downloaded from Arrow.com.

### 9.1.1.5 Register PWDCFG1

**PWDCFG1** RMAP: X Address: $08_H$

Protected watchdog configuration 1 PAGE: 2 Reset Value: $46_H$

| 7 | 6 | 5 | 4 | 3 | 2 | 1 | 0 |
|---|---|---|---|---|---|---|---|
| **nu** | **CW** | | | | | | |
| r | rwp | | | | | | |

| Field | Bits | Type | Description |
|---|---|---|---|
| nu | 7 | r | **Not used** |
| CW | 6:0 | rwp | **Window watchdog closed window size**<br>$00_H$ 0 watchdog cycles<br>$01_H$ 50 watchdog cycles<br>$02_H$ 100 watchdog cycles<br>...<br>$7F_H$ 6350 watchdog cycles<br>Reset: $46_H$ |



Downloaded from Arrow.com.

### 9.1.1.6 Register PWDCFG2

**PWDCFG2** RMAP: X Address: $0A_H$

Protected Watchdog Configuration 2 PAGE: 2 Reset Value: $78_H$

| 7 | 6 | 5 | 4 | 3 | 2 | 1 | 0 |
|---|---|---|---|---|---|---|---|
| **nu** | **OW** | | | | | | |
| r | rwp | | | | | | |

| Field | Bits | Type | Description |
|---|---|---|---|
| nu | 7 | r | **Not used** |
| OW | 6:0 | rwp | **Window watchdog open window size**<br>$00_H$ 50 watchdog cycles<br>$01_H$ 50 watchdog cycles<br>$02_H$ 100 watchdog cycles<br>...<br>$7F_H$ 6350 watchdog cycles<br>Reset: $78_H$ |



Downloaded from Arrow.com.

### 9.1.2 Read-only registers for protected configuration registers

#### 9.1.2.1 Register RWDCFG0

**RWDCFG0** RMAP: X Address: $07_H$

Read-only watchdog configuration 0 PAGE: 2 Reset Value: $9B_H$

| 7 | 6 | 5 | 4 | 3 | 2 | 1 | 0 |
|---|---|---|---|---|---|---|---|
| **WWDETHR** | | | | **WWDEN** | **nu** | **WWDTSEL** | **WDCYC** |
| r | | | | r | r | r | r |

| Field | Bits | Type | Description |
|---|---|---|---|
| WWDETHR | 7:4 | r | **Window watchdog error threshold ACTIVE**<br>$0_H$ 0<br>$1_H$ 1<br>...<br>$F_H$ 15<br>Reset: $9_H$ |
| WWDEN | 3 | r | **Window watchdog enable STATUS**<br>$0_B$ , disabled<br>$1_B$ , enabled<br>$1_B$ Reset: |
| nu | 2 | r | **Not used** |
| WWDTSEL | 1 | r | **Window watchdog trigger selection ACTIVE**<br>$0_B$ , external WDI input used as WWD trigger<br>$1_B$ , WWD is triggered by SPI write to WWDSCMD register<br>$1_B$ Reset: |
| WDCYC | 0 | r | **Watchdog cycle time ACTIVE**<br>$0_B$ , 10 µs tick period<br>$1_B$ , 100 µs tick period<br>$1_B$ Reset: |



Downloaded from Arrow.com.

### 9.1.2.2 Register RWDCFG1

**RWDCFG1** RMAP: X Address: $09_H$

Read-only watchdog configuration 1 PAGE: 2 Reset Value: $46_H$

| 7 | 6 | 5 | 4 | 3 | 2 | 1 | 0 |
|---|---|---|---|---|---|---|---|
| **nu** | **CW** | | | | | | |
| r | | | | r | | | |

| Field | Bits | Type | Description |
|---|---|---|---|
| nu | 7 | r | **Not used** |
| CW | 6:0 | r | **Window watchdog closed window size ACTIVE**<br>$00_H$ 0 watchdog cycles<br>$01_H$ 50 watchdog cycles<br>$02_H$ 100 watchdog cycles<br>...<br>$7F_H$ 6350 watchdog cycles<br>Reset: $46_H$ |



Downloaded from Arrow.com.

### 9.1.2.3 Register RWDCFG2

**RWDCFG2** RMAP: X Address: $0B_H$

Read-only watchdog configuration 2 PAGE: 2 Reset Value: $78_H$

| 7 | 6 | 5 | 4 | 3 | 2 | 1 | 0 |
|---|---|---|---|---|---|---|---|
| **nu** | **OW** | | | | | | |
| r | | | | r | | | |

| Field | Bits | Type | Description |
|---|---|---|---|
| nu | 7 | r | **Not used** |
| OW | 6:0 | r | **Window watchdog open window size ACTIVE**<br>$00_H$ 50 watchdog cycles<br>$01_H$ 50 watchdog cycles<br>$02_H$ 100 watchdog cycles<br>...<br>$7F_H$ 6350 watchdog cycles<br>Reset: $78_H$ |



Downloaded from Arrow.com.

### 9.1.3 Protected device configuration registers

The registers in this section are protected by a defined access procedure. This procedure is based on the access to two individual registers writing inverted information. For detailed information please refer to SPI write initiated state transition request and regulator configuration.



Downloaded from Arrow.com.

### 9.1.3.1 Register DEVCTRL

**DEVCTRL** RMAP: X Address: $34_H$

Device state control PAGE: 1 Reset Value: $00_H$

| 7 | 6 | 5 | 4 | 3 | 2 | 1 | 0 |
|---|---|---|---|---|---|---|---|
| **VM2EN** | **VM1EN** | **BOOST1EN** | **BUCK2EN** | **nu** | **STATEREQ** | | |
| rw | rw | rw | rw | r | rw | | |

| Field | Bits | Type | Description |
|---|---|---|---|
| VM2EN | 7 | rw | **External voltage monitoring 2 enable request**<br>$0_H$ , disable<br>$1_H$ , enable<br>Reset: $0_H$ |
| VM1EN | 6 | rw | **External voltage monitoring 1 enable request**<br>$0_H$ , disable<br>$1_H$ , enable<br>Reset: $0_H$ |
| BOOST1EN | 5 | rw | **Boost1 enable request**<br>$0_H$ , disable<br>$1_H$ , enable<br>Reset: $0_H$ |
| BUCK2EN | 4 | rw | **Buck2 enable request**<br>$0_H$ , disable<br>$1_H$ , enable<br>Reset: $0_H$ |
| nu | 3 | r | **Not used** |
| STATEREQ | 2:0 | rw | **Device state request**<br>$00_H$ Reserved<br>$01_H$ , ACTIVE state<br>$02_H$ Reserved<br>$03_H$ , DISABLED state<br>$04_H$ Reserved<br>$05_H$ Reserved<br>$06_H$ Reserved<br>$07_H$ , LOCKED state<br>Reset: $00_H$ |



Downloaded from Arrow.com.

### 9.1.3.2 Register DEVCTRLN

**DEVCTRLN** RMAP: X Address: $35_H$

Device state control inverted PAGE: 1 Reset Value: $00_H$

| 7 | 6 | 5 | 4 | 3 | 2 | 1 | 0 |
|---|---|---|---|---|---|---|---|
| **VM2EN** | **VM1EN** | **BOOST1EN** | **BUCK2EN** | **nu** | **STATEREQ** | | |
| rw | rw | rw | rw | r | rw | | |

| Field | Bits | Type | Description |
|---|---|---|---|
| VM2EN | 7 | rw | **External voltage monitoring 2 enable request**<br>$0_H$ , enable<br>$1_H$ , disable<br>Reset: $0_H$ |
| VM1EN | 6 | rw | **External voltage monitoring 1 enable request**<br>$0_H$ , enable<br>$1_H$ , disable<br>Reset: $0_H$ |
| BOOST1EN | 5 | rw | **Boost1 enable request**<br>$0_H$ , enable<br>$1_H$ , disable<br>Reset: $0_H$ |
| BUCK2EN | 4 | rw | **Buck2 enable request**<br>$0_H$ , enable<br>$1_H$ , disable<br>Reset: $0_H$ |
| nu | 3 | r | **Not used** |
| STATEREQ | 2:0 | rw | **Device state request**<br>$07_H$ Reserved<br>$06_H$ , ACTIVE state<br>$05_H$ Reserved<br>$04_H$ , DISABLED state<br>$03_H$ Reserved<br>$02_H$ Reserved<br>$01_H$ Reserved<br>$00_H$ , LOCKED state<br>Reset: $00_H$ |



Downloaded from Arrow.com.

### 9.1.3.3 Register B2VCTRL

**B2VCTRL** RMAP: X Address: $10_H$

Buck2 output voltage control PAGE: 1 Reset Value: $02_H$

| 7 | 6 | 5 | 4 | 3 | 2 | 1 | 0 |
|---|---|---|---|---|---|---|---|
| **nu** | | | | **B2VOUTF** | | | |
| r | | | | rwhu | | | |

| Field | Bits | Type | Description |
|---|---|---|---|
| nu | 7:4 | r | **Not used** |
| B2VOUTF | 3:0 | rwhu | **Buck2 output voltage setting fine resolution**<br>$0_H$ , 1.30 V<br>$1_H$ , 1.20 V<br>$2_H$ , 1.25 V<br>$3_H$ , 1.15 V<br>$4_H$ , 1.10 V<br>$5_H$ , 1.00 V<br>$6_H$ , 1.05 V<br>$7_H$ , 0.95 V<br>$8_H$ , 0.90 V<br>Reset: $2_H$ |



Downloaded from Arrow.com.

### 9.1.3.4 Register B2VCTRLN

**B2VCTRLN** RMAP: X Address: $11_H$

Buck2 output voltage control inverted PAGE: 1 Reset Value: $0D_H$

| 7 | 6 | 5 | 4 | 3 | 2 | 1 | 0 |
|---|---|---|---|---|---|---|---|
| **nu** | | | | **B2VOUTF** | | | |
| r | | | | rwhu | | | |

| Field | Bits | Type | Description |
|---|---|---|---|
| nu | 7:4 | r | **Not used** |
| B2VOUTF | 3:0 | rwhu | **Buck2 output voltage setting fine resolution**<br>$F_H$ 1.30 V<br>$E_H$ 1.20 V<br>$D_H$ 1.25 V<br>$C_H$ 1.15 V<br>$B_H$ 1.10 V<br>$A_H$ 1.00 V<br>$9_H$ 1.05 V<br>$8_H$ 0.95 V<br>$7_H$ 0.90 V<br>Reset: $D_H$ |



Downloaded from Arrow.com.

### 9.1.4 General registers

#### 9.1.4.1 Register PROTCFG

| **PROTCFG** | RMAP: X | Address: | $03_H$ |
|---|---|---|---|
| Configuration protection | PAGE: 2 | Reset Value: | $00_H$ |

| 7 | 6 | 5 | 4 | 3 | 2 | 1 | 0 |
|---|---|---|---|---|---|---|---|
| **KEY** | | | | | | | |
| rw | | | | | | | |

| Field | Bits | Type | Description |
|---|---|---|---|
| KEY | 7:0 | rw | **Protection key**<br>Reset: $00_H$ |



Downloaded from Arrow.com.

### 9.1.4.2 Register WWDSCMD

**WWDSCMD** RMAP: X Address: $33_H$

Window watchdog service command PAGE: 2 Reset Value: $00_H$

| 7 | 6 | 5 | 4 | 3 | 2 | 1 | 0 |
|---|---|---|---|---|---|---|---|
| **TRIG_STATUS** | **nu** | | | | | | **TRIG** |
| r | r | | | | | | rw |

| Field | Bits | Type | Description |
|---|---|---|---|
| TRIG_STATUS | 7 | r | **Window watchdog last trigger received via SPI**<br>Reset: $00_H$ |
| nu | 6:1 | r | **Not used** |
| TRIG | 0 | rw | **Window watchdog trigger command**<br>Reset: $00_H$ |



Downloaded from Arrow.com.

### 9.1.5 Event status registers

The event status registers of the device are organized hierarchically. The global status register is used to collect information of the status flags set in other registers to enable the user to speed up the event source determination.

A bit in the global status register is automatically set, when a bit in the respective status register is set (event based, not level based).

If a bit in the global status register is set, the user should read out the corresponding status register for the detailed information on the event source.

The bits in the global status flag register can be cleared without effect on the other status registers. Clearing a bit in any of the other status registers does not reset the corresponding bit in the global status register.

#### 9.1.5.1 Register GSF

**GSF** RMAP: X Address: $1A_H$

Global status flags PAGE: 0 Reset Value: $00_H$

| 7 | 6 | 5 | 4 | 3 | 2 | 1 | 0 |
|---|---|---|---|---|---|---|---|
| **INTMISS** | **nu** | **R1VSxUV** | **OT** | **MON** | **SPI** | **MCU** | **SYS** |
| r | r | rw1c | rw1c | rw1c | rw1c | rw1c | rw1c |

| Field | Bits | Type | Description |
|---|---|---|---|
| INTMISS | 7 | r | **Interrupt timeout event**<br>$0_H$ , no event<br>$1_H$ , event occurred, cleared by hardware when all other flags in IF are cleared.<br>Reset: $0_H$ |
| nu | 6 | r | **Not used** |
| R1VSxUV | 5 | rw1c | **Battery voltage undervoltage event**<br>$0_H$ , no event, write 0 – no action<br>$1_H$ , event occurred, write 1 to clear the flag<br>Reset: $0_H$ |
| OT | 4 | rw1c | **Overtemperature or overcurrent monitoring event flag:** OTSF0,OTSF1, OCSF1<br>$0_H$ , no event, write 0 – no action<br>$1_H$ , event occurred, write 1 to clear the flag<br>Reset: $0_H$ |
| MON | 3 | rw1c | **Voltage monitoring event flag:** MONSF0, MONSF1, MONSF2<br>$0_H$ , no event, write 0 – no action<br>$1_H$ , event occurred, write 1 to clear the flag<br>Reset: $0_H$ |
| SPI | 2 | rw1c | **SPI event flag:** SPISF<br>$0_H$ , no event, write 0 – no action<br>$1_H$ , event occurred, write 1 to clear the flag<br>Reset: $0_H$ |

**(table continues...)**



Downloaded from Arrow.com.

**(continued)**

| Field | Bits | Type | Description |
|---|---|---|---|
| MCU | 1 | rw1c | **MCU event flag:** MCUSF0-QM,MCUSF1-QM<br>$0_H$ , no event, write 0 – no action<br>$1_H$ , event occurred, write 1 to clear the flag<br>Reset: $0_H$ |
| SYS | 0 | rw1c | **System event flag:** SYSSF0-QM,SYSSF1-QM<br>$0_H$ , no event, write 0 – no action<br>$1_H$ , event occurred, write 1 to clear the flag<br>Reset: $0_H$ |


Downloaded from Arrow.com.

### 9.1.5.2 Register SYSSF0

**SYSSF0-QM** RMAP: 1 Address: $1B_H$

System status flags – faults PAGE: 0 Reset Value: $00_H$

| 7 | 6 | 5 | 4 | 3 | 2 | 1 | 0 |
|---|---|---|---|---|---|---|---|
| **BGFLT2** | **BGFLT1** | **IOVDDOV** | **IOVDDUV** | **nu** | | | **FUSEERR** |
| rw1c | rw1c | rw1c | rw1c | r | | | rw1c |

| Field | Bits | Type | Description |
|---|---|---|---|
| BGFLT2 | 7 | rw1c | **Bandgap fault event 2**<br>$0_H$ , no event, write 0 – no action<br>$1_H$ , event occurred, write 1 to clear the flag<br>Reset: $0_H$ |
| BGFLT1 | 6 | rw1c | **Bandgap fault event 1**<br>$0_H$ , no event, write 0 – no action<br>$1_H$ , event occurred, write 1 to clear the flag<br>Reset: $0_H$ |
| IOVDDOV | 5 | rw1c | **IOVDD overvoltage event**<br>$0_H$ , no event, write 0 – no action<br>$1_H$ , event occurred, write 1 to clear the flag<br>Reset: $0_H$ |
| IOVDDUV | 4 | rw1c | **IOVDD undervoltage event**<br>$0_H$ , no event, write 0 – no action<br>$1_H$ , event occurred, write 1 to clear the flag<br>Reset: $0_H$ |
| nu | 3:1 | r | **Not used** |
| FUSEERR | 0 | rw1c | **Double bit error in fuse memory**<br>$0_H$ , no event, write 0 – no action<br>$1_H$ , event occurred, write 1 to clear the flag<br>Reset: $0_H$ |



Downloaded from Arrow.com.

### 9.1.5.3 Register SYSSF1

**SYSSF1-QM** RMAP: X Address: $1C_H$

System status flags – interrupts PAGE: 1 Reset Value: $00_H$

| 7 | 6 | 5 | 4 | 3 | 2 | 1 | 0 |
|---|---|---|---|---|---|---|---|
| **BGWARN2** | **BGWARN1** | **ENA_PWRUP** | **nu** | **SYNC** | **ENA** | **CFG2** | **CFG** |
| rw1c | rw1c | rw1c | r | rw1c | rw1c | rw1c | rw1c |

| Field | Bits | Type | Description |
|---|---|---|---|
| BGWARN2 | 7 | rw1c | **Bandgap warning event 2**<br>(VBG1+4%>VBG2)<br>$0_H$ , no event, write 0 – no action<br>$1_H$ , event occurred, write 1 to clear the flag<br>Reset: $0_H$ |
| BGWARN1 | 6 | rw1c | **Bandgap warning event 1**<br>(VBG1-4%<VBG2)<br>$0_H$ , no event, write 0 – no action<br>$1_H$ , event occurred, write 1 to clear the flag<br>Reset: $0_H$ |
| ENA_PWRUP | 5 | rw1c | **Device wake-up condition**<br>$0_H$ , device wake-up on a power-on-reset event, write 0 – no action<br>$1_H$ , device wake-up on ENA event, write 1 to clear the flag<br>Reset: $0_H$ |
| nu | 4 | r | **Not used** |
| SYNC | 3 | rw1c | **External clock synchronization fault event**<br>$0_H$ , no event, write 0 – no action<br>$1_H$ , event occurred, write 1 to clear the flag<br>Reset: $0_H$ |
| ENA | 2 | rw1c | **Enable interrupt event**<br>$0_H$ , no event, write 0 – no action<br>$1_H$ , event occurred, write 1 to clear the flag<br>Reset: $0_H$ |
| CFG2 | 1 | rw1c | **Output voltage configuration change fault event**<br>$0_H$ , no event, write 0 – no action<br>$1_H$ , event occurred, write 1 to clear the flag<br>Reset: $0_H$ |
| CFG | 0 | rw1c | **Supervision functions configuration change fault event**<br>$0_H$ , no event, write 0 – no action<br>$1_H$ , event occurred, write 1 to clear the flag<br>Reset: $0_H$ |


Downloaded from Arrow.com.

### 9.1.5.4 Register MCUSF0

**MCUSF0-QM** RMAP: 1 Address: $1D_H$

Microcontroller status flags 0 – faults PAGE: 0 Reset Value: $00_H$

| 7 | 6 | 5 | 4 | 3 | 2 | 1 | 0 |
|---|---|---|---|---|---|---|---|
| **HARDRES** | **SOFTRES** | **nu** | | **WWDF** | **nu** | | **INITF** |
| rw1c | rw1c | rw1c | | rw1c | r | | rw1c |

| Field | Bits | Type | Description |
|---|---|---|---|
| HARDRES | 7 | rw1c | **Hard reset event**<br>$0_H$ , no event, write 0 – no action<br>$1_H$ , event occurred, write 1 to clear the flag<br>Reset: $0_H$ |
| SOFTRES | 6 | rw1c | **Soft reset event**<br>$0_H$ , no event, write 0 – no action<br>$1_H$ , event occurred, write 1 to clear the flag<br>Reset: $0_H$ |
| nu | 5:4 | rw1c | **Not used** |
| WWDF | 3 | rw1c | **Window watchdog fault event**<br>$0_H$ , no event, write 0 – no action<br>$1_H$ , event occurred, write 1 to clear the flag<br>Reset: $0_H$ |
| nu | 2:1 | r | **Not used** |
| INITF | 0 | rw1c | **INIT timer error event**<br>$0_H$ , no event, write 0 – no action<br>$1_H$ , event occurred, write 1 to clear the flag<br>Reset: $0_H$ |



Downloaded from Arrow.com.

### 9.1.5.5 Register MCUSF1

**MCUSF1-QM** RMAP: X Address: $1E_H$

Microcontroller status flags 1 – warnings PAGE: 1 Reset Value: $00_H$

| 7 | 6 | 5 | 4 | 3 | 2 | 1 | 0 |
|---|---|---|---|---|---|---|---|
| **nu** | | | | **WWDMISS** | **nu** | | |
| r | | | | rw1c | r | | |

| Field | Bits | Type | Description |
|---|---|---|---|
| nu | 7:4 | r | **Not used** |
| WWDMISS | 3 | rw1c | **Window watchdog missed trigger event**<br>$0_H$ , no event, write 0 – no action<br>$1_H$ , event occurred, write 1 to clear the flag<br>Reset: $0_H$ |
| nu | 2:0 | r | **Not used** |



Downloaded from Arrow.com.

### 9.1.5.6 Register SPISF

**SPISF** RMAP: X Address: $1F_H$

SPI status flags PAGE: 1 Reset Value: $00_H$

| 7 | 6 | 5 | 4 | 3 | 2 | 1 | 0 |
|---|---|---|---|---|---|---|---|
| **nu** | **B2VCTRL** | **DEVCTRL** | **LOCK** | **DUR** | **ADDR** | **LEN** | **PAR** |
| r | rw1c | rw1c | rw1c | rw1c | rw1c | rw1c | rw1c |

| Field | Bits | Type | Description |
|---|---|---|---|
| nu | 7 | r | **Not used** |
| B2VCTRL | 6 | rw1c | **SPI protocol B2VCTRL access error event**<br>$0_H$ , no event, write 0 – no action<br>$1_H$ , event occurred, write 1 to clear the flag<br>Reset: $0_H$ |
| DEVCTRL | 5 | rw1c | **SPI protocol DEVCTRL access error event**<br>$0_H$ , no event, write 0 – no action<br>$1_H$ , event occurred, write 1 to clear the flag<br>Reset: $0_H$ |
| LOCK | 4 | rw1c | **SPI protocol LOCK or UNLOCK access error event**<br>$0_H$ , no event, write 0 – no action<br>$1_H$ , event occurred, write 1 to clear the flag<br>Reset: $0_H$ |
| DUR | 3 | rw1c | **SPI duration error event**<br>Chip select signal CS "low" for more than 2 ms<br>$0_H$ , no event, write 0 – no action<br>$1_H$ , event occurred, write 1 to clear the flag<br>Reset: $0_H$ |
| ADDR | 2 | rw1c | **SPI invalid address error event**<br>$0_H$ , no event, write 0 – no action<br>$1_H$ , event occurred, write 1 to clear the flag<br>Reset: $0_H$ |
| LEN | 1 | rw1c | **SPI frame length error event**<br>Number of detected SPI clock cycles different than 16<br>$0_H$ , no event, write 0 – no action<br>$1_H$ , event occurred, write 1 to clear the flag<br>Reset: $0_H$ |
| PAR | 0 | rw1c | **SPI parity error event**<br>$0_H$ , no event, write 0 – no action<br>$1_H$ , event occurred, write 1 to clear the flag<br>Reset: $0_H$ |


Downloaded from Arrow.com.

### 9.1.5.7 Register MONSF0

**MONSF0** RMAP: 1 Address: $20_H$

Voltage monitoring status flags 0 – short to ground PAGE: 0 Reset Value: $00_H$

| 7 | 6 | 5 | 4 | 3 | 2 | 1 | 0 |
|---|---|---|---|---|---|---|---|
| **VM2STG** | **VM1STG** | **nu** | **BOOST1STG** | **nu** | | **BUCK2STG** | **BUCK1STG** |
| rw1c | rw1c | r | rw1c | r | | rw1c | rw1c |

| Field | Bits | Type | Description |
|---|---|---|---|
| VM2STG | 7 | rw1c | **External voltage monitoring 2 short to ground event**<br>$0_H$ , no event, write 0 – no action<br>$1_H$ , event occurred, write 1 to clear the flag<br>Reset: $0_H$ |
| VM1STG | 6 | rw1c | **External voltage monitoring 1 short to ground event**<br>$0_H$ , no event, write 0 – no action<br>$1_H$ , event occurred, write 1 to clear the flag<br>Reset: $0_H$ |
| nu | 5 | r | **Not used** |
| BOOST1STG | 4 | rw1c | **Boost1 short to ground event**<br>$0_H$ , no event, write 0 – no action<br>$1_H$ , event occurred, write 1 to clear the flag<br>Reset: $0_H$ |
| nu | 3:2 | r | **Not used** |
| BUCK2STG | 1 | rw1c | **Buck2 short to ground event**<br>$0_H$ , no event, write 0 – no action<br>$1_H$ , event occurred, write 1 to clear the flag<br>Reset: $0_H$ |
| BUCK1STG | 0 | rw1c | **Buck1 short to ground event**<br>$0_H$ , no event, write 0 – no action<br>$1_H$ , event occurred, write 1 to clear the flag<br>Reset: $0_H$ |


Downloaded from Arrow.com.

### 9.1.5.8 Register MONSF1

**MONSF1** RMAP: 1 Address: $21_H$

Voltage monitoring status flags 1 – overvoltage PAGE: 0 Reset Value: $00_H$

| 7 | 6 | 5 | 4 | 3 | 2 | 1 | 0 |
|---|---|---|---|---|---|---|---|
| **VM2OV** | **VM1OV** | **nu** | **BOOST1OV** | **nu** | | **BUCK2OV** | **BUCK1OV** |
| rw1c | rw1c | r | rw1c | r | | rw1c | rw1c |

| Field | Bits | Type | Description |
|---|---|---|---|
| VM2OV | 7 | rw1c | **External voltage monitoring 2 overvoltage event**<br>$0_H$ , no event, write 0 – no action<br>$1_H$ , event occurred, write 1 to clear the flag<br>Reset: $0_H$ |
| VM1OV | 6 | rw1c | **External voltage monitoring 1 overvoltage event**<br>$0_H$ , no event, write 0 – no action<br>$1_H$ , event occurred, write 1 to clear the flag<br>Reset: $0_H$ |
| nu | 5 | r | **Not used** |
| BOOST1OV | 4 | rw1c | **Boost1 overvoltage event**<br>$0_H$ , no event, write 0 – no action<br>$1_H$ , event occurred, write 1 to clear the flag<br>Reset: $0_H$ |
| nu | 3:2 | r | **Not used** |
| BUCK2OV | 1 | rw1c | **Buck2 overvoltage event**<br>$0_H$ , no event, write 0 – no action<br>$1_H$ , event occurred, write 1 to clear the flag<br>Reset: $0_H$ |
| BUCK1OV | 0 | rw1c | **Buck1 overvoltage event**<br>$0_H$ , no event, write 0 – no action<br>$1_H$ , event occurred, write 1 to clear the flag<br>Reset: $0_H$ |



Downloaded from Arrow.com.

### 9.1.5.9 Register MONSF2

**MONSF2** RMAP: 1 Address: $22_H$

Voltage monitoring status flags 2 – undervoltage PAGE: 0 Reset Value: $00_H$

| 7 | 6 | 5 | 4 | 3 | 2 | 1 | 0 |
|---|---|---|---|---|---|---|---|
| **VM2UV** | **VM1UV** | **nu** | **BOOST1UV** | **nu** | | **BUCK2UV** | **BUCK1UV** |
| rw1c | rw1c | r | rw1c | r | | rw1c | rw1c |

| Field | Bits | Type | Description |
|---|---|---|---|
| VM2UV | 7 | rw1c | **External voltage monitoring 2 undervoltage event**<br>$0_H$ , no event, write 0 – no action<br>$1_H$ , event occurred, write 1 to clear the flag<br>Reset: $0_H$ |
| VM1UV | 6 | rw1c | **External voltage monitoring 1 undervoltage event**<br>$0_H$ , no event, write 0 – no action<br>$1_H$ , event occurred, write 1 to clear the flag<br>Reset: $0_H$ |
| nu | 5 | r | **Not used** |
| BOOST1UV | 4 | rw1c | **Boost1 undervoltage event**<br>$0_H$ , no event, write 0 – no action<br>$1_H$ , event occurred, write 1 to clear the flag<br>Reset: $0_H$ |
| nu | 3:2 | r | **Not used** |
| BUCK2UV | 1 | rw1c | **Buck2 undervoltage event**<br>$0_H$ , no event, write 0 – no action<br>$1_H$ , event occurred, write 1 to clear the flag<br>Reset: $0_H$ |
| BUCK1UV | 0 | rw1c | **Buck1 undervoltage event**<br>$0_H$ , no event, write 0 – no action<br>$1_H$ , event occurred, write 1 to clear the flag<br>Reset: $0_H$ |


Downloaded from Arrow.com.

### 9.1.5.10 Register OTSF0

**OTSF0** RMAP: 1 Address: $23_H$

Overtemperature events 0 – faults PAGE: 0 Reset Value: $00_H$

| 7 | 6 | 5 | 4 | 3 | 2 | 1 | 0 |
|---|---|---|---|---|---|---|---|
| **MONOT** | **nu** | | | | | **BUCK2OT** | **BUCK1OT** |
| rw1c | r | | | | | rw1c | rw1c |

| Field | Bits | Type | Description |
|---|---|---|---|
| MONOT | 7 | rw1c | **Monitoring overtemperature fault event**<br>$0_H$ , no event, write 0 – no action<br>$1_H$ , event occurred, write 1 to clear the flag<br>Reset: $0_H$ |
| nu | 6:2 | r | **Not used** |
| BUCK2OT | 1 | rw1c | **Buck2 overtemperature fault event**<br>$0_H$ , no event, write 0 – no action<br>$1_H$ , event occurred, write 1 to clear the flag<br>Reset: $0_H$ |
| BUCK1OT | 0 | rw1c | **Buck1 overtemperature fault event**<br>$0_H$ , no event, write 0 – no action<br>$1_H$ , event occurred, write 1 to clear the flag<br>Reset: $0_H$ |



Downloaded from Arrow.com.

### 9.1.5.11 Register OTSF1

**OTSF1** RMAP: X Address: $24_H$

Overtemperature flags 1 – warnings PAGE: 1 Reset Value: $00_H$

| 7 | 6 | 5 | 4 | 3 | 2 | 1 | 0 |
|---|---|---|---|---|---|---|---|
| **MONOTW** | **nu** | | | | | **BUCK2OTW** | **BUCK1OTW** |
| rw1c | r | | | | | rw1c | rw1c |

| Field | Bits | Type | Description |
|---|---|---|---|
| MONOTW | 7 | rw1c | **Monitoring overtemperature warning event**<br>$0_H$ , no event, write 0 – no action<br>$1_H$ , event detected – write 1 to clear flag<br>Reset: $0_H$ |
| nu | 6:2 | r | **Not used** |
| BUCK2OTW | 1 | rw1c | **Buck2 overtemperature warning event**<br>$0_H$ , no event, write 0 – no action<br>$1_H$ , event occurred, write 1 to clear the flag<br>Reset: $0_H$ |
| BUCK1OTW | 0 | rw1c | **Buck1 overtemperature warning event**<br>$0_H$ , no event, write 0 – no action<br>$1_H$ , event occurred, write 1 to clear the flag<br>Reset: $0_H$ |



Downloaded from Arrow.com.

### 9.1.5.12 Register OCSF1

**OCSF1** RMAP: X Address: $25_H$

Overcurrent flags – warnings PAGE: 1 Reset Value: $00_H$

| 7 | 6 | 5 | 4 | 3 | 2 | 1 | 0 |
|---|---|---|---|---|---|---|---|
| **nu** | | | **BOOST1OCW** | **nu** | | **BUCK2OCW** | **BUCK1OCW** |
| r | | | rw1c | r | | rw1c | rw1c |

| Field | Bits | Type | Description |
|---|---|---|---|
| nu | 7:5 | r | **Not used** |
| BOOST1OCW | 4 | rw1c | **Boost1 overcurrent warning event**<br>$0_H$ , no event, write 0 – no action<br>$1_H$ , event occurred, write 1 to clear the flag<br>Reset: $0_H$ |
| nu | 3:2 | r | **Not used** |
| BUCK2OCW | 1 | rw1c | **Buck2 overcurrent warning event**<br>$0_H$ , no event, write 0 – no action<br>$1_H$ , event occurred, write 1 to clear the flag<br>Reset: $0_H$ |
| BUCK1OCW | 0 | rw1c | **Buck1 overcurrent warning event**<br>$0_H$ , no event, write 0 – no action<br>$1_H$ , event occurred, write 1 to clear the flag<br>Reset: $0_H$ |



Downloaded from Arrow.com.

### 9.1.6 Device status information registers

The device status information registers reflect the current status of the device irrespective of the latched status information in the interrupt flag registers. Therefore, reading these registers reflects the current status of the device, for example the currently active power rails or the temperature warnings.

#### 9.1.6.1 Register OTSTAT0

| **OTSTAT0** | RMAP: X | Address: | $26_H$ |
|---|---|---|---|
| Overtemperature status 0 – warnings | PAGE: 1 | Reset Value: | $00_H$ |

| 7 | 6 | 5 | 4 | 3 | 2 | 1 | 0 |
|---|---|---|---|---|---|---|---|
| **MONOTW** | **nu** | | | | | **BUCK2OTW** | **BUCK1OTW** |
| r | r | | | | | r | r |

| Field | Bits | Type | Description |
|---|---|---|---|
| MONOTW | 7 | r | **Monitoring overtemperature warning STATUS**<br>$0_H$ , no overtemperature warning<br>$1_H$ , overtemperature warning present<br>Reset: $0_H$ |
| nu | 6:2 | r | **Not used** |
| BUCK2OTW | 1 | r | **Buck2 overtemperature warning STATUS**<br>$0_H$ , no overtemperature warning<br>$1_H$ , overtemperature warning present<br>Reset: $0_H$ |
| BUCK1OTW | 0 | r | **Buck1 overtemperature warning STATUS**<br>$0_H$ , no overtemperature warning<br>$1_H$ , overtemperature warning present<br>Reset: $0_H$ |


Downloaded from Arrow.com.

### 9.1.6.2 Register VMONSTAT0

**VMONSTAT0** RMAP: X Address: $27_H$
Voltage monitoring PAGE: 1 Reset Value: $00_H$

| 7 | 6 | 5 | 4 | 3 | 2 | 1 | 0 |
|---|---|---|---|---|---|---|---|
| **VM2OK** | **VM1OK** | **R1VSxUV** | **BOOST1OK** | **SYNCOK** | **ENA** | **BUCK2OK** | **BUCK1OK** |
| r | r | r | r | r | r | r | r |

| Field | Bits | Type | Description |
|---|---|---|---|
| VM2OK | 7 | r | **External voltage monitoring 2 STATUS**<br>$0_H$ , output rail disabled or not in total operation band<br>$1_H$ , output rail enabled and in total operation band<br>Reset: $0_H$ |
| VM1OK | 6 | r | **External voltage monitoring 1 STATUS**<br>$0_H$ , output rail disabled or not in total operation band<br>$1_H$ , output rail enabled and in total operation band<br>Reset: $0_H$ |
| R1VSxUV | 5 | r | **Battery undervoltage STATUS**<br>$0_H$ , battery voltage undervoltage not present.<br>$1_H$ , battery voltage undervoltage present.<br>Reset: $0_H$ |
| BOOST1OK | 4 | r | **Boost1 STATUS**<br>$0_H$ , output rail disabled or not in total operation band<br>$1_H$ , output rail enabled and in total operation band<br>Reset: $0_H$ |
| SYNCOK | 3 | r | **External clock synchronization STATUS**<br>$0_H$ , clock synchronization is not operating<br>$1_H$ , clock synchronization is operating.<br>Reset: $0_H$ |
| ENA | 2 | r | **Enable signal level**<br>$0_H$ , enable signal is "low"<br>$1_H$ , enable signal is "high"<br>Reset: $0_H$ |
| BUCK2OK | 1 | r | **Buck2 STATUS**<br>$0_H$ , output rail disabled or not in total operation band<br>$1_H$ , output rail enabled and in total operation band<br>Reset: $0_H$ |
| BUCK1OK | 0 | r | **Buck1 STATUS**<br>$0_H$ , output rail disabled or not in total operation band<br>$1_H$ , output rail enabled and in total operation band<br>Reset: $0_H$ |


Downloaded from Arrow.com.

### 9.1.6.3 Register DEVSTAT

**DEVSTAT** RMAP: X Address: $28_H$

Device state information PAGE: 1 Reset Value: $00_H$

| 7 | 6 | 5 | 4 | 3 | 2 | 1 | 0 |
|---|---|---|---|---|---|---|---|
| **VM2EN** | **VM1EN** | **BOOST1EN** | **BUCK2EN** | **nu** | **STATE** | | |
| r | r | r | r | r | r | | |

| Field | Bits | Type | Description |
|---|---|---|---|
| VM2EN | 7 | r | **External voltage monitoring 2 enable STATUS**<br>$0_H$ , voltage is disabled<br>$1_H$ , voltage is enabled<br>Reset: $0_H$ |
| VM1EN | 6 | r | **External voltage monitoring 1 enable STATUS**<br>$0_H$ , voltage is disabled<br>$1_H$ , voltage is enabled<br>Reset: $0_H$ |
| BOOST1EN | 5 | r | **Boost 1 enable STATUS**<br>$0_H$ , voltage is disabled<br>$1_H$ , voltage is enabled<br>Reset: $0_H$ |
| BUCK2EN | 4 | r | **Buck 2 enable STATUS**<br>$0_H$ , voltage is disabled<br>$1_H$ , voltage is enabled<br>Reset: $0_H$ |
| nu | 3 | r | **Not used** |
| STATE | 2:0 | r | **Device state**<br>$0_H$ reserved<br>$1_H$ , ACTIVE state<br>$2_H$ reserved<br>$3_H$ reserved<br>$4_H$ reserved<br>$5_H$ reserved<br>$6_H$ reserved<br>$7_H$ reserved<br>Reset: $0_H$ |



Downloaded from Arrow.com.

### 9.1.6.4 Register PROTSTAT

**PROTSTAT** RMAP: X Address: $29_H$

Protection status information PAGE: 2 Reset Value: $01_H$

| 7 | 6 | 5 | 4 | 3 | 2 | 1 | 0 |
|---|---|---|---|---|---|---|---|
| **KEY4OK** | **KEY3OK** | **KEY2OK** | **KEY1OK** | **nu** | | | **LOCK** |
| r | r | r | r | r | | | r |

| Field | Bits | Type | Description |
|---|---|---|---|
| KEY4OK | 7 | r | **Fourth protection key valid STATUS**<br>$0_H$ , key not valid<br>$1_H$ , key valid<br>Reset: $0_H$ |
| KEY3OK | 6 | r | **Third protection key valid STATUS**<br>$0_H$ , key not valid<br>$1_H$ , key valid<br>Reset: $0_H$ |
| KEY2OK | 5 | r | **Second protection key valid STATUS**<br>$0_H$ , key not valid<br>$1_H$ , key valid<br>Reset: $0_H$ |
| KEY1OK | 4 | r | **First protection key valid STATUS**<br>$0_H$ , key not valid<br>$1_H$ , key valid<br>Reset: $0_H$ |
| nu | 3:1 | r | **Not used** |
| LOCK | 0 | r | **Lock STATUS**<br>$0_H$ , access to protected registers is unlocked.<br>$1_H$ , access to protected registers is locked.<br>Reset: $0_H$ |



Downloaded from Arrow.com.

### 9.1.6.5 Register WWDSTAT

**WWDSTAT** RMAP: X Address: $2A_H$

Window watchdog status information PAGE: 2 Reset Value: $00_H$

| 7 | 6 | 5 | 4 | 3 | 2 | 1 | 0 |
|---|---|---|---|---|---|---|---|
| **nu** | | | | **WWDECNT** | | | |
| r | | | | r | | | |

| Field | Bits | Type | Description |
|---|---|---|---|
| nu | 7:4 | r | **Not used** |
| WWDECNT | 3:0 | r | **Window watchdog error counter level**<br>$0_H$ 0<br>$1_H$ 1<br>...<br>$F_H$ 15<br>Reset: $0_H$ |



Downloaded from Arrow.com.

### 9.1.6.6 Register MPSSTAT0

| **MPSSTAT0** | RMAP: X | Address: | $37_H$ |
|---|---|---|---|
| Microcontroller programming support status information | PAGE: 1 | Reset Value: | $03_H$ |

| 7 | 6 | 5 | 4 | 3 | 2 | 1 | 0 |
|---|---|---|---|---|---|---|---|
| **nu** | | | | **MPSSTAT** | | | |
| r | | | | r | | | |

| Field | Bits | Type | Description |
|---|---|---|---|
| nu | 7:4 | r | **Not used** |
| MPSSTAT | 3:0 | r | **MPS STATUS**<br>$3_H$ , device in operating mode<br>$6_H$ , device in programming mode<br>$9_H$ , device in test mode (production test mode, read-back only)<br>Reset: $3_H$ |


Downloaded from Arrow.com.

### 9.1.6.7 Register B2VSTAT

**B2VSTAT** RMAP: X Address: $39_H$

Buck2 output voltage status PAGE: 1 Reset Value: $02_H$

| 7 | 6 | 5 | 4 | 3 | 2 | 1 | 0 |
|---|---|---|---|---|---|---|---|
| **BUCK2VOUTC** | | | | **BUCK2VOUTF** | | | |
| r | | | | r | | | |

| Field | Bits | Type | Description |
|---|---|---|---|
| BUCK2VOUTC | 7:4 | r | **Buck2 output voltage setting coarse resolution STATUS**<br>$0_H$ , Range 0.9 – 1.3 V. Fine resolution is evaluated.<br>$1_H$ , 1.5 V<br>$2_H$ , 1.8 V<br>$3_H$ , 2.45 V<br>$4_H$ , 3.3 V<br>Reset: $0_H$ |
| BUCK2VOUTF | 3:0 | r | **Buck2 output voltage setting fine resolution STATUS**<br>$0_H$ , 1.30 V<br>$1_H$ , 1.20 V<br>$2_H$ , 1.25 V<br>$3_H$ , 1.15 V<br>$4_H$ , 1.10 V<br>$5_H$ , 1.00 V<br>$6_H$ , 1.05 V<br>$7_H$ , 0.95 V<br>$8_H$ , 0.90 V<br>Reset: $2_H$ |



Downloaded from Arrow.com.

### 9.1.7 Device information registers



Downloaded from Arrow.com.

### 9.1.7.1 Register HWDECT0

**HWDECT0** RMAP: X Address: $3B_H$

Hardware option information PAGE: 1 Reset Value: $D3_H$

| 7 | 6 | 5 | 4 | 3 | 2 | 1 | 0 |
|---|---|---|---|---|---|---|---|
| **VM2AVA** | **VM1AVA** | **nu** | **BOOST1AVA** | **nu** | | **BUCK2AVA** | **FRE** |
| r | r | r | r | r | | r | r |

| Field | Bits | Type | Description |
|---|---|---|---|
| VM2AVA | 7 | r | **External voltage monitoring 2 automatic use detection**<br>$0_H$ , VM2 is not used in this application.<br>$1_H$ , VM2 is used in this application.<br>Reset: $1_H$ |
| VM1AVA | 6 | r | **External voltage monitoring 1 automatic use detection**<br>$0_H$ , VM1 is not used in this application.<br>$1_H$ , VM1 is used in this application.<br>Reset: $1_H$ |
| nu | 5 | r | **Not used** |
| BOOST1AVA | 4 | r | **Boost1 automatic use detection**<br>$0_H$ , Boost1 is not used in this application.<br>$1_H$ , Boost1 is used in this application.<br>Reset: $1_H$ |
| nu | 3:2 | r | **Not used** |
| BUCK2AVA | 1 | r | **Buck2 automatic use detection**<br>$0_H$ , Buck2 is not used in this application.<br>$1_H$ , Buck2 is used in this application.<br>Reset: $1_H$ |
| FRE | 0 | r | **Frequency selection information**<br>$0_H$ , LF frequency setting<br>$1_H$ , HF frequency setting<br>Reset: $1_H$ |



Downloaded from Arrow.com.

### 9.1.7.2 Register DEVID

**DEVID** RMAP: X Address: $3C_H$

Device identification PAGE: 1 Reset Value: $10_H$

| 7 | 6 | 5 | 4 | 3 | 2 | 1 | 0 |
|---|---|---|---|---|---|---|---|
| **DEVTYPE** | | | | | | | |
| r | | | | | | | |

| Field | Bits | Type | Description |
|---|---|---|---|
| DEVTYPE | 7:0 | r | **Device family**<br>$10_H$ , TLF30682 device<br>Reset: $10_H$ |



Downloaded from Arrow.com.

# 10 Application information

***Note**: The following information is given as an example for the implementation of the device only and shall not be regarded as a description or warranty of a certain functionality, condition or quality of the device.*

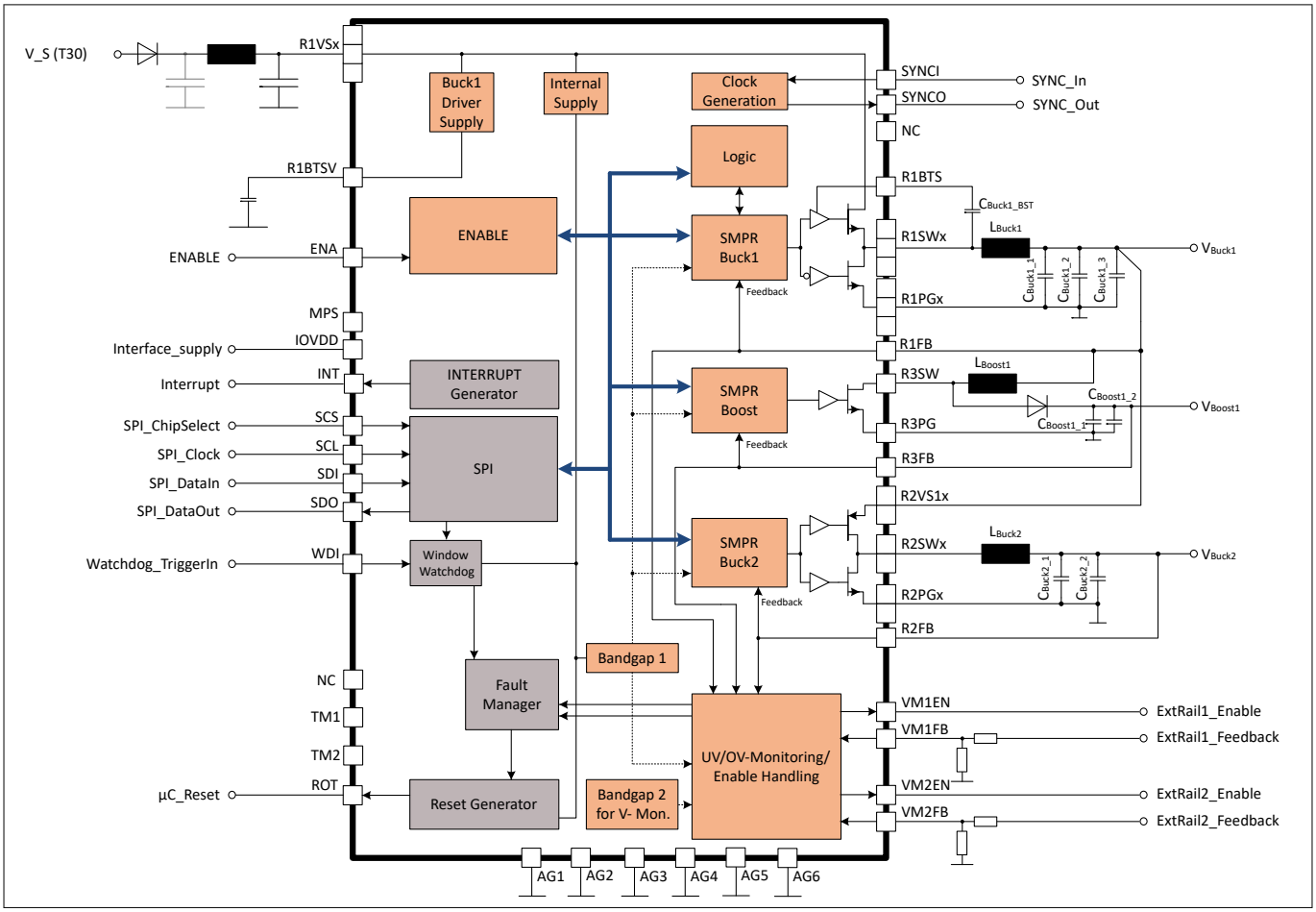


**Figure 24 Application diagram**

***Note**: This figure is a simplified example of an application circuit. The function must be verified in the application.*

**Table 30 Recommended values for the passive components in Figure 24**

| Name | Value (typical) | Comments |
|---|---|---|
| $L_{Buck1}$ | 3.3 µH | Buck1 inductor:<br>Use an inductor with a saturation current above the Buck1 overcurrent protection threshold $I_{R1,OCP}$. |
| $C_{Buck1_1}$ | 33 µF | Buck1 output capacitor 1:<br>Use a ceramic capacitor in X7R material with a voltage rating of 6.3 V or higher.<br>Place this capacitor close to the R2VSx input of Buck2 and connect it between the R2VSx and R2PGx pins directly. |

**(table continues...)**



Downloaded from Arrow.com.

**Table 30 (continued) Recommended values for the passive components in Figure 24**

| Name | Value (typical) | Comments |
|---|---|---|
| $C_{Buck1_2}$, $C_{Buck1_3}$ | 33 µF | Buck1 output capacitors 2 and 3:<br>Use a ceramic capacitor in X7R material with a voltage rating of 6.3 V or higher. |
| $C_{Buck1_BST}$ | 100 nF | Buck1 bootstrap capacitor:<br>Use a ceramic capacitor in X7R material with a voltage rating of 16 V or higher. |
| $L_{Buck2}$ | 1.5 µH | Buck2 inductor:<br>Use an inductor with a saturation current above the Buck2 overcurrent protection threshold $I_{R2,OCP}$. |
| $C_{Buck2_1}$, $C_{Buck2_2}$, | 33 µF | Buck2 output capacitors 1 to 2:<br>Use a ceramic capacitor in X7R material with a voltage rating of 6.3 V or higher. |
| $L_{Boost1}$ | 6.8 µH | Boost1 inductor:<br>Use an inductor with a saturation current above the Boost1 overcurrent protection threshold $I_{R3,OCP}$. |
| $C_{Boost1_1}$ | 100 nF | Boost1 output capacitor 1:<br>Use a ceramic capacitor in X7R material with a voltage rating of 10 V or higher. |
| $C_{Boost1_2}$ | 10 µF | Boost1 output capacitor 2:<br>Use a ceramic capacitor in X7R material with a voltage rating of 10 V or higher. |

For additional supportive documentation or further information please contact http://www.infineon.com/.



Downloaded from Arrow.com.

# 11 Package information

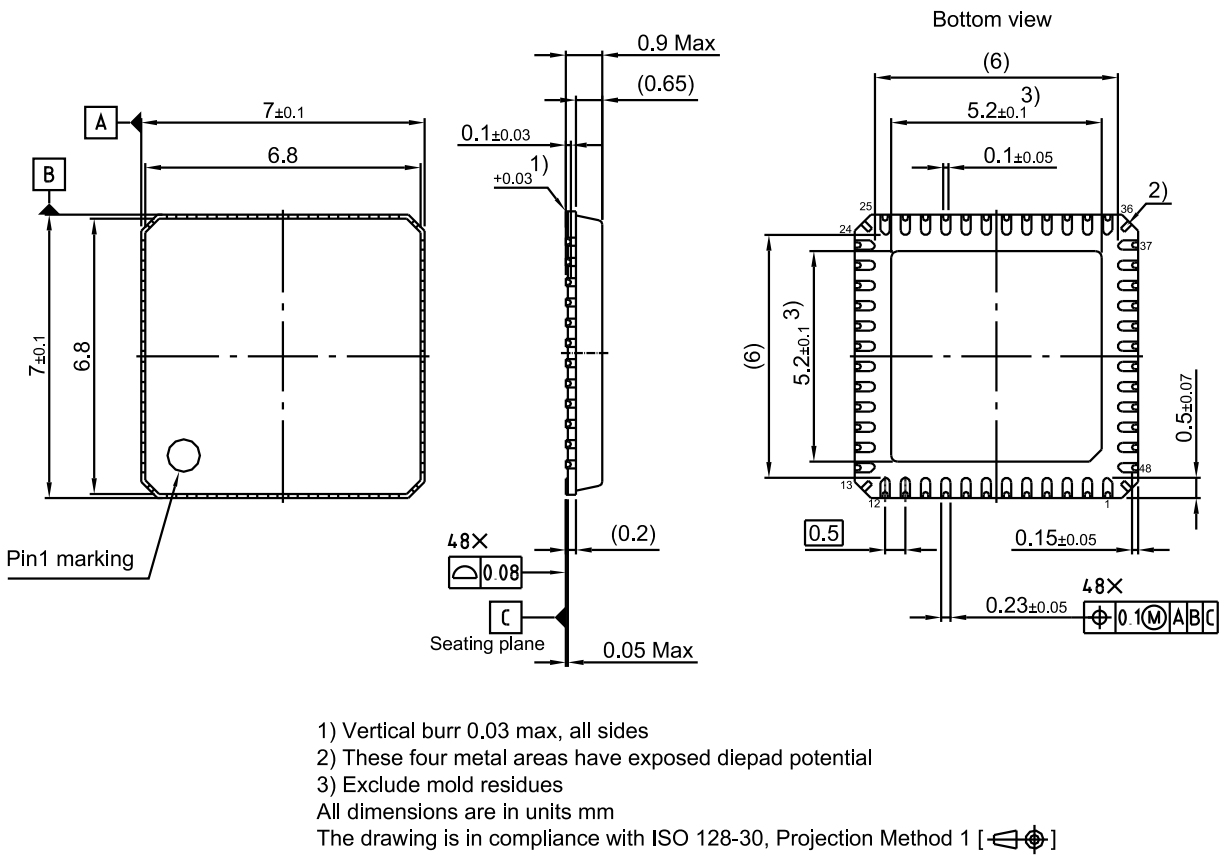


**Figure 25** **PG-VQFN-48**

### Green Product (RoHS compliant)

To meet the world-wide customer requirements for environmentally friendly products and to be compliant with government regulations the device is available as a Green Product. Green Products are RoHS compliant (Pb-free finish on leads and suitable for Pb-free soldering according to IPC/JEDEC J-STD-020).

### Information on packages

For more information on packages, such as recommendations on assembly, refer to www.infineon.com/packages.



Downloaded from Arrow.com.

# Revision history

| Revision | Date | Changes |
|---|---|---|
| 1.07 | 2024-12-27 | Editorial changes |
| 1.06 | 2024-04-30 | Editorial changes. |
| 1.05 | 2022-11-28 | Editorial changes. |
| 1.04 | 2020-05-22 | Editorial changes. |
| 1.03 | 2020-04-08 | Editorial changes. |
| 1.02 | 2019-10-02 | Editorial changes. |
| 1.01 | 2019-07-03 | PDF metadata updated. |
| 1.0 | 2019-04-05 | Datasheet created. |


Downloaded from Arrow.com.

**Trademarks**

All referenced product or service names and trademarks are the property of their respective owners.

**Edition 2024-12-27**

**Published by**

**Infineon Technologies AG**

**81726 Munich, Germany**

**© 2024 Infineon Technologies AG**

**All Rights Reserved.**

**Do you have a question about any aspect of this document?**

**Email: erratum@infineon.com**

**Document reference**
**IFX-wgw1637841773604**
**Z8F65710893**

**Important notice**

The information given in this document shall in no event be regarded as a guarantee of conditions or characteristics ("Beschaffenheitsgarantie").

With respect to any examples, hints or any typical values stated herein and/or any information regarding the application of the product, Infineon Technologies hereby disclaims any and all warranties and liabilities of any kind, including without limitation warranties of non-infringement of intellectual property rights of any third party.

In addition, any information given in this document is subject to customer's compliance with its obligations stated in this document and any applicable legal requirements, norms and standards concerning customer's products and any use of the product of Infineon Technologies in customer's applications.

The data contained in this document is exclusively intended for technically trained staff. It is the responsibility of customer's technical departments to evaluate the suitability of the product for the intended application and the completeness of the product information given in this document with respect to such application.

**Warnings**

Due to technical requirements products may contain dangerous substances. For information on the types in question please contact your nearest Infineon Technologies office.

Except as otherwise explicitly approved by Infineon Technologies in a written document signed by authorized representatives of Infineon Technologies, Infineon Technologies' products may not be used in any applications where a failure of the product or any consequences of the use thereof can reasonably be expected to result in personal injury.

Downloaded from Arrow.com.