Alle Rechte vorbehalten/ *All rights reserved*

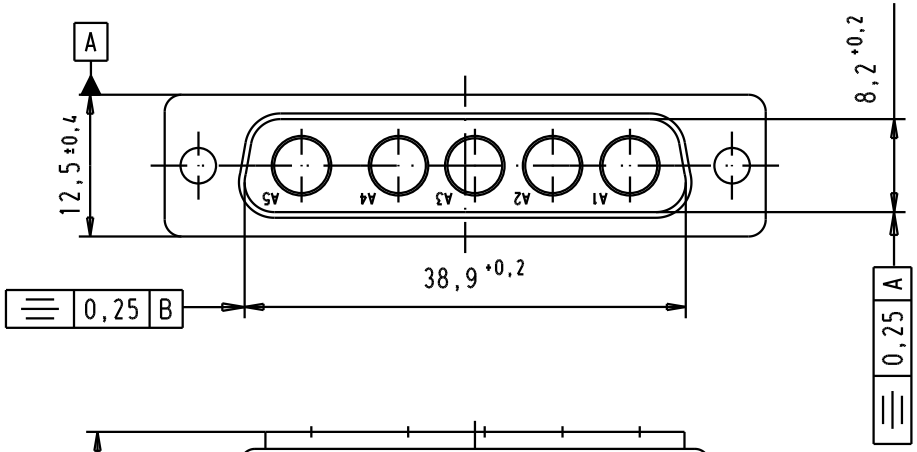

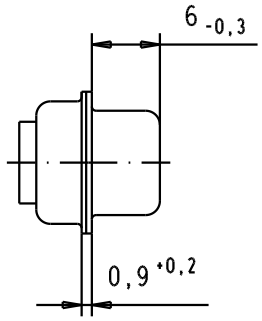

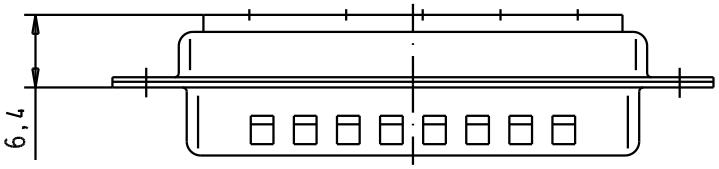

PCB layout hole, component side

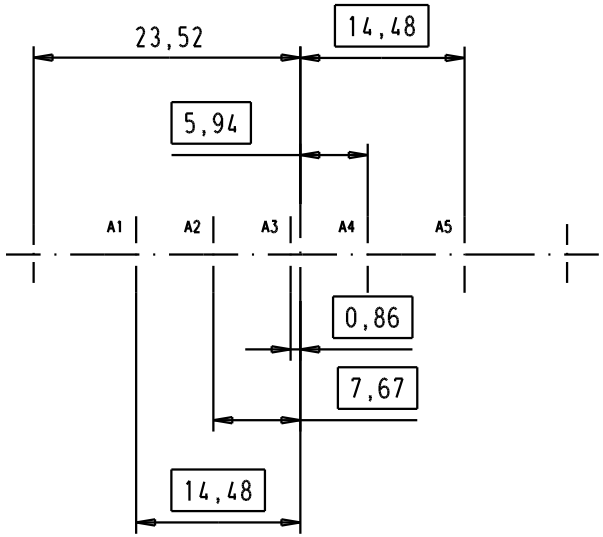

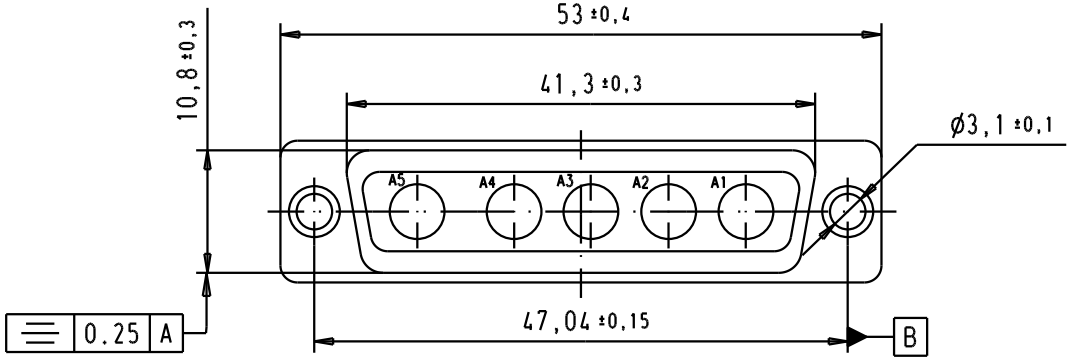

09 69 310 0055.500	Non magnetic					Dat.	Name	D-Sub, male, 5W5 without contacts, with tin plated shell with dimples.
					Detail.	12/11/01	AF	
					Insp.			All Dim. in mm Orig. Size DIN A 4
09 69 310 0055		32119	23/06/04	AC	Stand.			
		31519	03/07/03	TCP	HARTING EURL F-95972 Paris			TB 09 69 310 0055
Part number		29742	12/11/01	AF				Sub.
		Mod.	Dat.	Name				

Maßstab/ *Scale* 1,5:1

Blatt/ *Page* 1/1

Downloaded from Arrow.com.