Data Sheet | Item Number: 2716-108

PCB terminal block; lever; 16 mm²; Pin spacing 10 mm; 8-pole; CAGE CLAMP®; gray

https://www.wago.com/2716-108

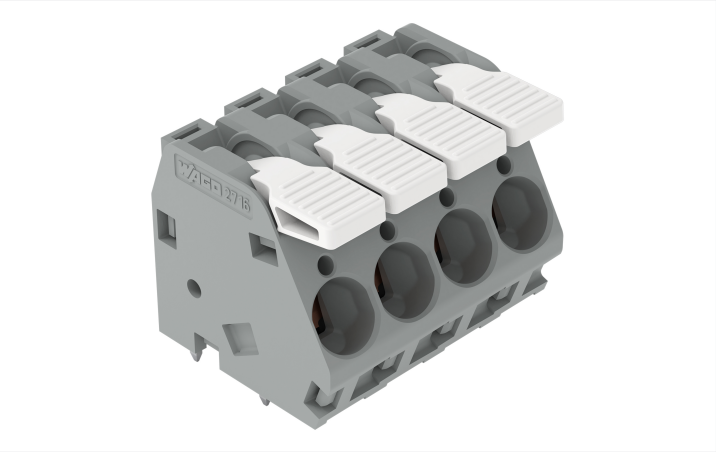

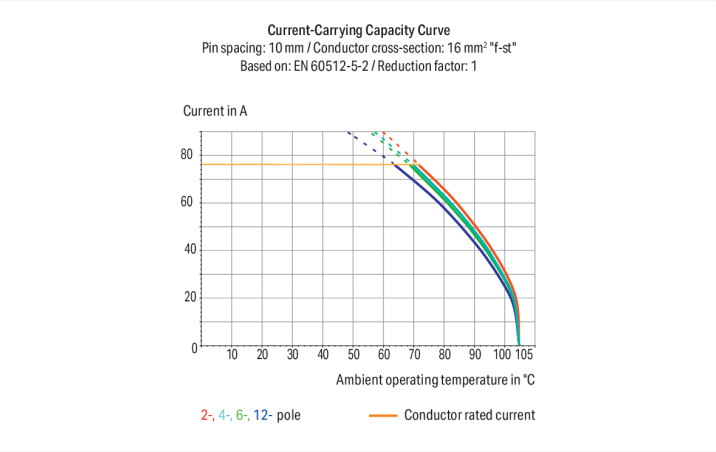

Color: gray

Similar to illustration

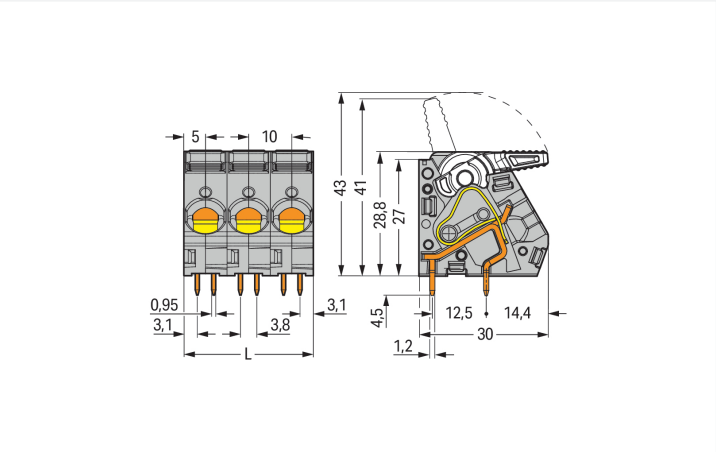

Dimensions in mm
L = pole no. x pin spacing

PCB terminal block, 2716 Series, gray

This PCB terminal block (item number 2716-108) is designed for quick and easy connections. It is a universal connector that can be used practically anywhere, for example, as a pluggable PCB connector, panel feedthrough header, connector for rail-mount terminal blocks, or a floating connector for different mounting methods. Conductors should only be connected to this PCB terminal block if their strip length is between 12 and 13 mm . Featuring one conductor terminal along with CAGE CLAMP®, this connector outperforms the competition. Our trusted universal connection known as CAGE CLAMP® is industry-leading when it comes to connection technology and electrical interconnections. The dimensions are (80 x 33.3 x 30) mm (width x height x depth). This PCB terminal block is suitable for conductor cross sections ranging from 1.5 mm² to 16 mm².

The contact surface is coated with tin. This PCB terminal block is operated with a lever. The PCB terminal block is designed for THT soldering. The conductor is designed to be inserted into the board at a 30° angle..

Downloaded from Arrow.com.

Notes

Variants:	Other pole numbers Other colors Mixed-color PCB connector strips Direct marking Other versions (or variants) can be requested from WAGO Sales or configured at https://configurator.wago.com/.

Electrical data

Ratings per	IEC/EN 60664-1		
Overvoltage category	III	III	II
Pollution degree	3	2	2
Nominal voltage	320 V	320 V	630 V
Rated impulse withstand voltage	4 kV	4 kV	4 kV
Rated current	76 A	76 A	76 A

Approvals per	UL 1059		
Use group	B	C	D
Rated voltage	300 V	150 V	300 V
Rated current	55 A	55 A	10 A

Connection Data

Clamping units	8
Total number of potentials	8
Number of connection types	1
Number of levels	1

Connection 1

Connection technology	CAGE CLAMP®
Actuation type	Lever
Solid conductor	1.5 … 16 mm² / 16 … 6 AWG
Fine-stranded conductor	1.5 … 16 mm² / 16 … 6 AWG
Fine-stranded conductor; with insulated ferrule	1.5 … 10 mm²
Fine-stranded conductor; with uninsulated ferrule	1.5 … 10 mm²
Strip length	12 … 13 mm / 0.47 … 0.51 inches
Conductor connection direction to PCB	30 °
Pole number	8

Physical data

Pin spacing	10 mm / 0.394 inches
Width	80 mm / 3.15 inches
Height	33.3 mm / 1.311 inches
Height from the surface	28.8 mm / 1.134 inches
Depth	30 mm / 1.181 inches
Solder pin length	4.5 mm
Solder pin dimensions	0.95 x 1.2 mm
Drilled hole diameter	1.6 $^{(+0.1)}$ mm

PCB contact

PCB contact	THT
Solder pin arrangement	over the entire terminal strip (in-line)
Number of solder pins per potential	4

 Continued on next page
Downloaded from Arrow.com.

Material data

Note (material data)	Information on material specifications can be found here
Color	gray
Material group	I
Insulation material (main housing)	Polyamide (PA66)
Flammability class per UL94	V0
Clamping spring material	Chrome-nickel spring steel (CrNi)
Contact material	Electrolytic copper (E_{Cu})
Contact Plating	Tin
Fire load	1.022 MJ
Weight	71.5 g

Environmental requirements

Limit temperature range	-60 … +105 °C

Commercial data

Product Group	4 (Printed Circuit Connectors)
PU (SPU)	15 pcs
Packaging type	Box
Country of origin	PL
GTIN	4045454739324
Customs tariff number	85369010000

Product Classification

UNSPSC	39121409
eCl@ss 10.0	27-44-04-01
eCl@ss 9.0	27-44-04-01
ETIM 9.0	EC002643
ETIM 10.0	EC002643
ECCN	NO US CLASSIFICATION

Environmental Product Compliance

RoHS Compliance Status	Compliant,No Exemption

Approvals / Certificates

General approvals

Approval	Standard	Certificate Name
CCA DEKRA Certification B.V.	EN 60947	NTR NL-7131
cURus Underwriters Laboratories Inc.	UL 1059	E45172
KEMA/KEUR DEKRA Certification B.V.	EN 60947	71-117512

Downloaded from Arrow.com.

Downloads

Environmental Product Compliance

Compliance Search

Environmental Product Compliance 2716-108

Documentation

Additional Information

Technical Section	03.04.2019	pdf 2027.26 KB

CAD/CAE-Data

CAD data

2D/3D Models 2716-108

CAE data

ZUKEN Portal 2716-108

PCB Design

Symbol and Footprint via SamacSys 2716-108

Symbol and Footprint via Ultra Librarian 2716-108

1 Compatible Products

1.1 Optional Accessories

1.1.1 Ferrule

1.1.1.1 Ferrule

Item No.: 216-264
Ferrule; Sleeve for 1.5 mm² / AWG 16; insulated; electro-tin plated; electrolytic copper; gastight crimped; acc. to DIN 46228, Part 4/09.90; black

Item No.: 216-209
Ferrule; Sleeve for 10 mm² / AWG 8; insulated; electro-tin plated; red

Item No.: 216-109
Ferrule; Sleeve for 10 mm² / AWG 8; uninsulated; electro-tin plated

Item No.: 216-266
Ferrule; Sleeve for 2.5 mm² / AWG 14; insulated; electro-tin plated; electrolytic copper; gastight crimped; acc. to DIN 46228, Part 4/09.90; blue

Item No.: 216-267
Ferrule; Sleeve for 4 mm² / AWG 12; insulated; electro-tin plated; electrolytic copper; gastight crimped; acc. to DIN 46228, Part 4/09.90; gray

Item No.: 216-208
Ferrule; Sleeve for 6 mm² / AWG 10; insulated; electro-tin plated; electrolytic copper; gastight crimped; acc. to DIN 46228, Part 4/09.90; yellow

Item No.: 216-108
Ferrule; Sleeve for 6 mm² / AWG 10; uninsulated; electro-tin plated; silver-colored

Downloaded from Arrow.com.

1.1.2 Test and measurement

1.1.2.1 Testing accessories

Item No.: 210-136
Test plug; 2 mm Ø; with 500 mm cable; red

Installation Notes

Conductor termination

To open the clamping unit, pull the operating lever all the way back — 2706 and 2716 Series.

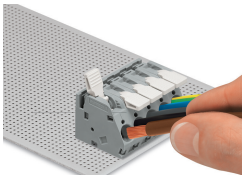

Inserting/removing a conductor – 2706 and 2716 Series.

Testing

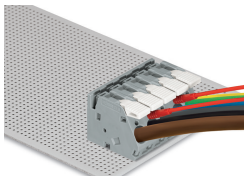

Testing with test plug – 2706 and 2716 Series.

Downloaded from Arrow.com.