DRAWING MADE IN THIRD ANGLE PROJECTION

PART NUMBER	REV	FIRST USED
466791 -1	D	122500-1
466791 -2	D	565435-5
466791 -3	D	354500-1

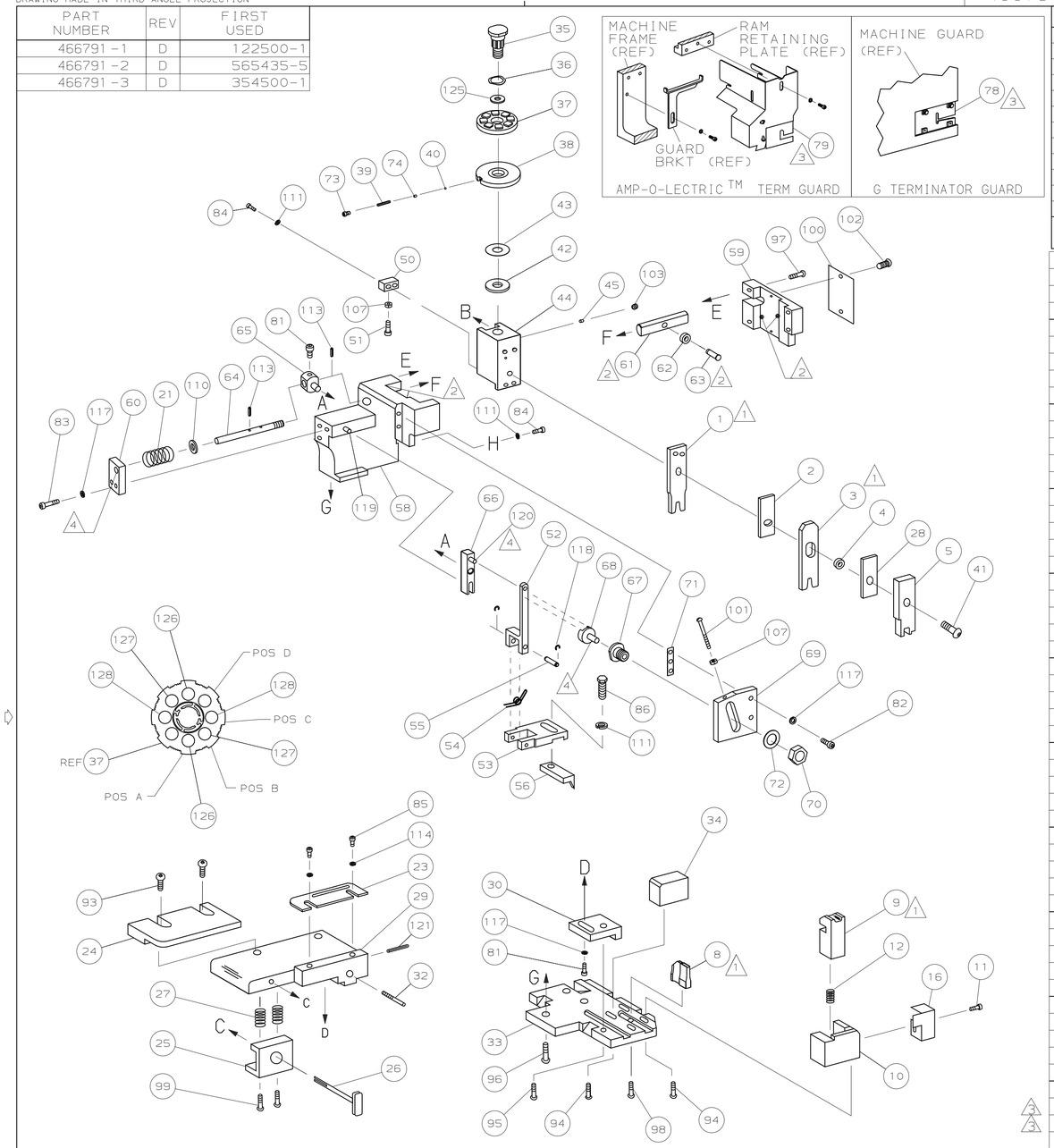

TERMINAL NAME: .250 BLADE RECEPTACLE			
		640841	
CRIMPING DATA			
PAD LTR	CRIMP HEIGHT		WIRE SIZE
A	.072 ±.002 [1.83 ±0.05mm]		16
B	.064 ±.002 [1.63 ±0.05mm]		18
C	.061 ±.002 [1.55 ±0.05mm]		20
D	NOT		USED
CRIMP	SIZE	TYPE	RANGE
WIRE	.090 [2.29mm]	F	20 - 16
INSUL	.180 [4.57mm]	O	.145 MAX

WIRE STRIP LENGTH	TERM APPL SPEC	FEED	APPL INSTRUCTION	SET UP GAGE	LAYOUT
–	114-1026	.690	408-8040	458637-1	1044

-3	-2	-1	U/M	DWG SIZE	PART NO	DESCRIPTION	ITEM NO
							129
2	2	2	–	C	9-354778-9	PIN, WIRE DISC (.2990)C	128
2	2	2	–	C	9-354778-3	PIN, WIRE DISC (.2960)B	127
2	2	2	–	C	7-354778-7	PIN, WIRE DISC (.2880)A	126
1	1	1	–	A	986950-1	WASHER, FLAT PRECISION	125
1	1	1	–	A	217238-1	DOCUMENTATION PACKAGE	124
1	1	1	–	–	4088040	SF APPL INST 408-8040	123
							122
1	1	1	–	A	4-21028-0	PIN,SLT SPR(ø.093x.75)ST GDE PL	121
1	1	1	–	A	1-21030-1	PIN,DOWEL(ø.187x.50)LEVER	120
1	1	1	–	A	1-21030-6	PIN,DOWEL(ø.187x1.25)HOUSING	119
2	2	2	–	A	21045-3	RING,RET "C"(ø.187)FD FING PIN	118
5	5	5	–	A	21024-5	WASHER, LOCK(#10)ADJ BLOCK	117
							116
							115
2	2	2	–	A	21024-2	WASHER,LOCK(#4)FRONT STP GUIDE	114
2	2	2	–	A	5-21028-1	PIN,SLT SPR(ø.125x.50)ADJ ROD	113
							112
4	4	4	–	A	21024-4	WASHER,LOCK(#8)STRIPPER	111
1	1	1	–	A	21899-4	WASHER,FLAT(ø5/16)SCREW ADJ	110
							109
							108
1	2	2	–	A	21018-5	NUT,HEX(6-32)FEED ADJ	107
							106
							105
1	1	–	–	A	992031-1	PIN, CLEVIS	104
1	1	1	–	A	21009-2	SCR,SKT SET(1/4-20x.25 LW)RAM	103
2	2	2	–	A	21017-2	SCR,DRIVE(#2x.19)ID PLATE	102
1	1	1	–	A	6-23715-5	SCR,PAN HD(6-32x1.50)FEED ADJ	101
1	1	1	–	B	461264-1	PLATE, IDENTIFICATION	100
2	2	2	–	A	3-21002-0	SCR,BHC(10-32x.88)DRAG	99
1	1	1	–	A	22733-8	SCR,BHC(8-32x.38 LW)ANVIL	98
2	2	2	–	A	2-21002-9	SCR,BHC(10-32x.75)CAP	97
3	3	3	–	A	2-22733-8	SCR,BHC(1/4-20x.62)HOUSING	96
1	1	1	–	A	2-21002-7	SCR,BHC(10-32x.50)SG ADJ BLOCK	95
4	4	4	–	A	2-21002-2	SCR,BHC(8-32x.50)TERM H DWN	94
2	2	2	–	A	2-21002-3	SCR,BHC(8-32x.62)R STP GDE	93
							92
1	1	1	–	A	1-21002-7	SCR,BHC(6-32x.38)CAM	91
							90
1	1	–	–	A	7-21000-9	SCR,SHC(4-40x.19)STRIPPER	89
							88
							87
1	1	1	–	A	2-22603-0	SCR,HEX HD(8-32x.31)FEED FINGER	86
2	2	2	–	A	1-21000-3	SCR,SHC(4-40x.25)F ST GUIDE	85
3	3	3	–	A	2-21000-7	SCR,SHC(8-32x.50)STRIPPER	84
2	2	2	–	A	3-21000-7	SCR,SHC(10-32x.75)FEED ROD GD	83
2	2	2	–	A	3-21000-6	SCR,SHC(10-32x.62)FEED ADJ BLK	82
2	2	2	–	A	3-21000-4	SCR,SHC(10-32x.38)SG ADJ BL	81
							80
–	REF	–	–	B	455749-1	GUARD, WINDOW	79
REF	–	–	–	B	679532-1	INSERT, GUARD	78
							77
							76
							75
1	1	1	–	A	690603-1	SPRING, ASSIST	74
1	1	1	–	A	23030-1	SCR,SHC(6-32x.25 SL)INS DISC	73
1	1	1	–	A	458109-1	WASHER, SPECIAL	72
1	1	1	–	A	690517-1	SPACER	71

QTY REQD PER ASSY — PARTS LIST

-1	-2	-3	U/M	DWG SIZE	PART NO	DESCRIPTION	ITEM NO
LEADMAKER	BENCH MODEL K	BENCH MODEL G			MECH POST FEED		
					MECH PRE FEED		
					MECH PRE FEED		
1	1	1	–	B	22594-8	NUT,HEX(1/2-20)	70
1	1	1	–	B	240628-1	PLATE, ADJUSTMENT	69
1	1	1	–	B	240626-1	SHAFT, PIVOT	68
1	1	1	–	B	240633-1	BUSHING	67
1	1	1	–	A	455680-1	LEVER, INTERMEDIATE	66
1	1	1	–	B	240629-1	BLOCK, PIVOT	65
1	1	1	–	A	240632-2	SCREW, ADJ FEED ROD	64
1	1	1	–	B	240659-3	PIN, CAM ROLLER	63
1	1	1	–	B	240658-1	ROLLER, CAM	62
1	1	1	–	B	454398-2	ROD, FEED	61
1	1	1	–	A	454178-1	GUIDE, FEED ROD	60
1	1	1	–	C	454220-1	CAP, RAM	59
1	1	1	–	D	454485-1	HOUSING	58
							57
1	1	1	–	B	458537-2	PAWL, FEED	56
1	1	1	–	B	240624-1	PIN, FEED FINGER	55
1	1	1	–	B	691499-1	SPRING, FEED FINGER	54
1	1	1	–	A	690541-1	HOLDER, FEED FINGER	53
1	1	1	–	B	455679-1	LEVER, TERMINAL FEED ARM	52
1	1	1	–	A	811242-2	BUMPER, HOLDDOWN	51
1	1	1	–	A	690753-1	SPACER, TONKER	50
1	–	–	–	B	690602-6	CAM, PRE-FEED 1 5/8 ST	49
–	1	–	–	B	690602-5	CAM, PRE-FEED 1 1/8 ST	48
–	–	1	–	B	690501-4	CAM, POST-FEED 1 5/8 ST	47
							46
1	1	1	–	A	690191-1	PLUG, NYLON	45
1	1	1	–	C	455673-1	RAM	44
1	1	1	–	A	690125-1	WASHER, LAMINATED	43
1	1	1	–	A	690124-1	WASHER, RAM	42
1	1	1	–	A	7-21002-9	BOLT, CRIMPER(5/16x1.00)	41
1	1	1	–	A	23241-6	BALL, STEEL	40
1	1	1	–	A	690170-1	SPRING, COMPRESSION	39
1	1	1	–	C	690142-1	DISC, INSULATION	38
1	1	1	–	D	354777-1	WIRE DISC, PLASTIC	37
1	1	1	–	A	22480-5	WASHER, SPRING	36
1	1	1	–	B	690212-1	POST, RAM	35
1	1	1	–	B	690786-1	SUPPORT, TERMINAL	34
1	1	1	–	D	455675-1	PLATE, BASE	33
1	1	1	–	A	690432-3	SCREW, ADJUSTMENT	32
							31
1	1	1	–	B	455689-1	BLOCK, STRIP GUIDE ADJ	30
1	1	1	–	C	455671-2	PLATE, STRIP GUIDE	29
1	1	1	–	C	1-455888-0	SPACER, FRONT SHEAR DEP	28
2	2	2	–	A	1-22284-0	SPRING, DRAG	27
1	1	1	–	B	690546-1	LEVER, DRAG RELEASE	26
1	1	1	–	B	240792-1	DRAG, TERMINAL	25
1	1	1	–	D	4-690504-4	GUIDE, STRIP (REAR)	24
1	1	1	–	A	690438-1	GUIDE, STRIP (FRONT)	23
–	–	1	–	B	690472-2	STRIPPER	22
1	1	1	–	A	4-22284-9	SPRING, FEED RETURN	21
1	1	–	–	A	679218-1	STRIPPER WIRE STOP ASSY	20
1	1	–	–	B	458949-1	STRIPPER	19
							18
							17
1	1	1	–	B	318563-1	GUARD, CHIP, FRONT	16
							15
							14
							13
1	1	1	–	A	5-22280-0	SPRING, SHEAR	12
1	1	1	–	B	690461-7	STOP, SHEAR	11
1	1	1	–	C	1-690459-0	HOLDER, SHEAR (FRONT)	10
1	1	1	–	C	454276-5	SHEAR, FLOAT (FRONT)	9
1	1	1	–	C	8-458834-3	ANVIL	8
							7
							6
1	1	1	–	C	1-455889-8	DEPRESSOR, SHEAR (FRONT)	5
1	1	1	–	B	238011-8	SPACER, BLOCK CRIMPER	4
1	1	1	–	C	456135-3	CRIMPER, INSULATION	3
1	1	1	–	C	1-455888-0	SPACER, CRIMPER	2
1	1	1	–	C	1-456406-5	CRIMPER, WIRE	1

QTY REQD PER ASSY — REVISION OF EACH ASSY NO (WHEN BLANK, USE DWG REVISION) — PARTS LIST

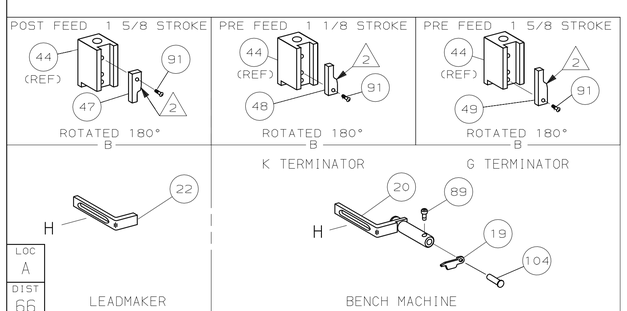

1. RECOMMENDED SPARE PARTS.
2. GREASE LIGHTLY.
3. GUARD MUST BE IN PLACE WHEN OPERATING APPLICATOR IN A BENCH MACHINE.
4. LUBRICATE DAILY USING NO. 20 MACHINE OIL.

P	F	LTR	REVISION RECORD	APP	DATE
		D	0150-6756-96, ADD -3	TB	3-96

DIMENSIONS IN INCHES. DO NOT SCALE PRINT. TOLERANCES UNLESS OTHERWISE SPECIFIED: 2 PLC DEC ±- 3 PLC DEC ±- 4 PLC DEC ±- ANGLES ± - SURF TEXTURE: √ REMOVE BURRS, BREAK SHARP EDGES R.015 MAX

MATL	HT TR	FIN
–	–	–
–	–	–

DR J.BAKER 3/25/96 — APP T ELBIN 3/25/96
CHK T.BOZEK 3/25/96 — REL B. MORGAN 4/11/96

AMP Incorporated Harrisburg, PA 17105-3608

NAME SIDE FEED HDM APPLICATOR — MACHINE REF MINI APPL

SCALE – — D — DWG NO 466791 — SHEET 1 OF 1 — REV D

THIS DRAWING IS A CONTROLLED DOCUMENT FOR AMP INCORPORATED. IT IS SUBJECT TO CHANGE AND THE CONTROLLING ENGINEERING ORGANIZATION SHOULD BE CONTACTED FOR THE LATEST REVISION.

THIS INFORMATION IS CONFIDENTIAL AND IS DISCLOSED TO YOU ON CONDITION THAT NO FURTHER DISCLOSURE IS MADE BY YOU TO OTHER THAN AMP PERSONNEL WITHOUT WRITTEN AUTHORIZATION FROM AMP INCORPORATED.

Downloaded from Arrow.com.