© 2020TE Connectivity. All Rights Reserved.

ELECTRICAL	MECHANICAL	ENVIRONMENTAL
IMPEDANCE 50 Ohm FREQUENCY RANGE DC to 6GHz INSERTION LOSS: Max. 0.05*SQRT(F) dB VSWR: Max. 1.15@0-3GHz Max. 1.20@3-6GHz DIELECTRIC WITHSTAND VOLTANGE: Max.2500 V RMS INSULATION RESISTANCE Min.5000 Mohms PIM3: Max.-160dBc @2x20W,900MHz,1800MHz, 2100MHz tested with cable	MATING CYCLES: MIN. 100 CYCLES RECOMMENDED TORQUE: 5Nm CABLE PULLING: 500N MIN. CABLE TORSION: 5Nm MIN.	TEMPERATURE RANGE:-40°~+85°C SALT SPRAY: 96H INTERFACE SEAL: IP68(1m,24h) MATED CLAMP SEAL: IP67(1m,0.5h)

REVISIONS

P	LTR	DESCRIPTION	DATE	DWN	APVD

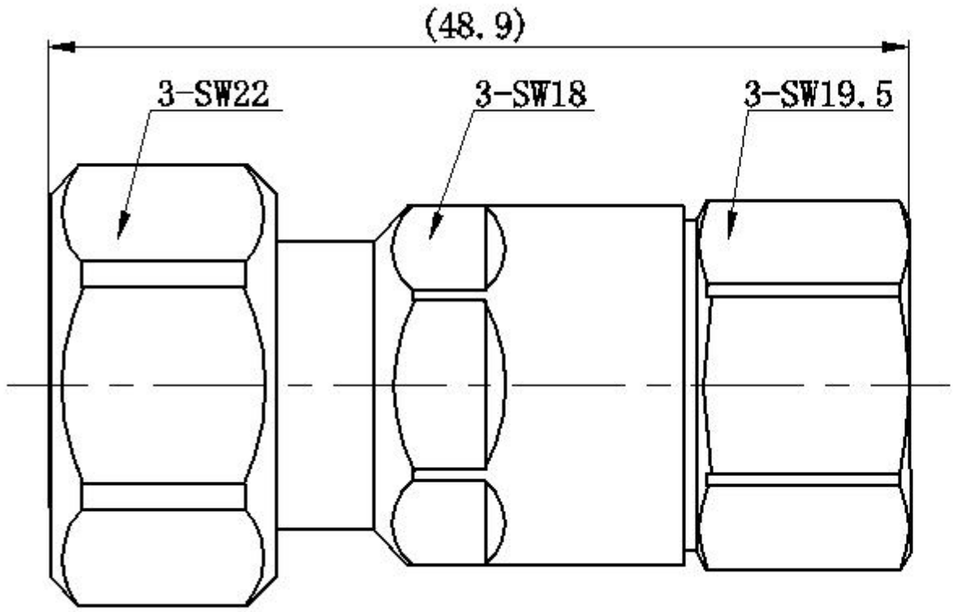

RECOMMENDED CABLE DIMENSION

NOTE:

1. INTERFACE ACCORDING TO IEC 61169-54

P/N	PART NAME	MATERIAL	PLATING
2081971-1	CENTER CONTACT	BRONZE	SILVER
	OUTER CONTACT	BRASS/BRONZE	WHITE BRONZE
	INSULATOR	PTFE	
	O-RING	SILICONE RUBBER	
	OTHERS	BRASS	NICKEL

THIS DRAWING IS A CONTROLLED DOCUMENT.

DIMENSIONS: mm

TOLERANCES UNLESS OTHERWISE SPECIFIED:

0 PLC	±0.3
1 PLC	±0.2
2 PLC	±0.20
3 PLC	±0.200
4 PLC	±0.2000
ANGLES	±-

MATERIAL: SEE TABLE -

FINISH: SEE TABLE -

DWN JZ	10MAR2020
CHK RZ	10MAR2020
APVD RS	10MAR2020
PRODUCT SPEC	108-115175
APPLICATION SPEC	408-160015
WEIGHT	61.5g

TE Connectivity

NAME: 4.3-10 STRAIGHT PLUG, SCREW FOR 1/2 CABLE CLAMP TYPE

SIZE	CAGE CODE	DRAWING NO	RESTRICTED TO
A3	00779	C-2081971	-

CUSTOMER DRAWING | SCALE 1:1 | SHEET 1 OF 2 | REV A

Downloaded from Arrow.com.

© 2020TE Connectivity. All Rights Reserved.

REVISIONS					
P	LTR	DESCRIPTION	DATE	DWN	APVD

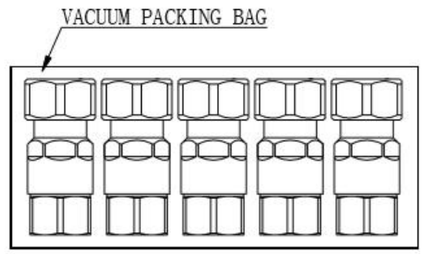

VACUUM PACKING(5PCS/BAG)

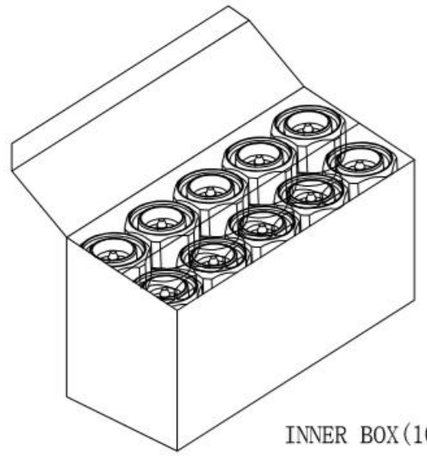

INNER BOX(10PCS/BOX)

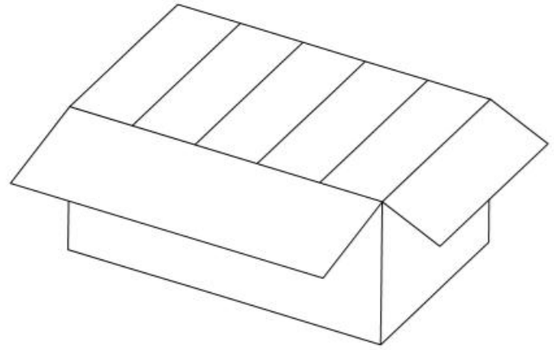

OUTER BOX(150PCS/BOX)

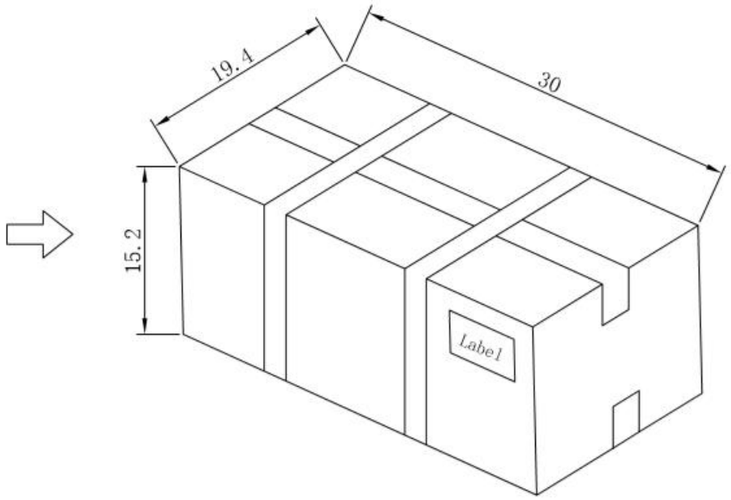

PACKAGE

(BOX SIZE ONLY FOR REFERENCE, UNIT: CM)

THIS DRAWING IS A CONTROLLED DOCUMENT.

DIMENSIONS: mm

TOLERANCES UNLESS OTHERWISE SPECIFIED:

0 PLC	±0.3
1 PLC	±0.2
2 PLC	±0.20
3 PLC	±0.200
4 PLC	±0.2000
ANGLES	±-

MATERIAL: SEE TABLE -

FINISH: SEE TABLE -

DWN	JZ	10MAR2020
CHK	RZ	10MAR2020
APVD	RS	10MAR2020

PRODUCT SPEC: 108-115175

APPLICATION SPEC: 408-160015

WEIGHT: 61.5g

CUSTOMER DRAWING

TE Connectivity

NAME: 4.3-10 STRAIGHT PLUG, SCREW FOR 1/2 CABLE CLAMP TYPE

SIZE	CAGE CODE	DRAWING NO	RESTRICTED TO
A3	00779	C-2081971	-

SCALE 1:1 | SHEET 2 OF 2 | REV A

Downloaded from Arrow.com.