MATERIAL NUMBER	ENGINEERING NUMBER
1300340008	8A5006-32DN

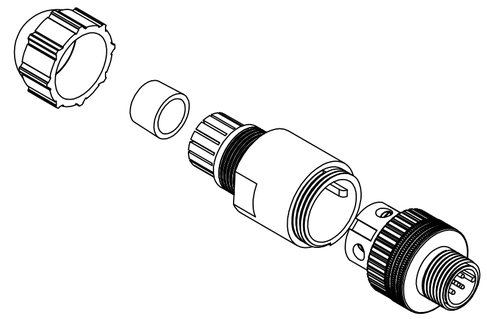

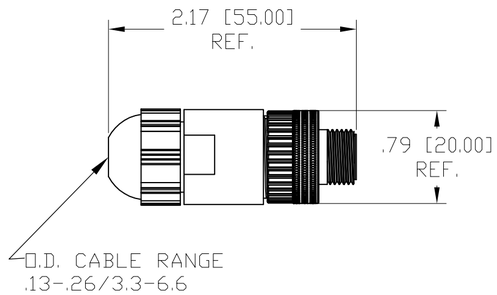

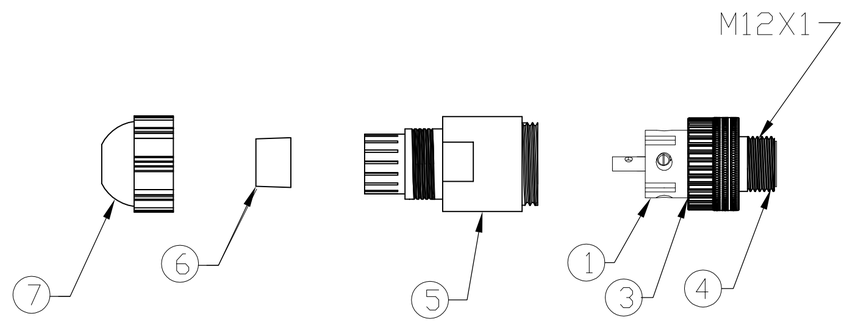

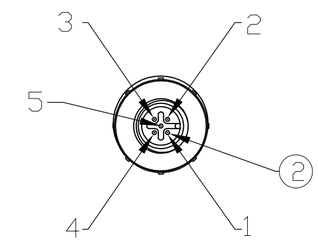

MALE FACE VIEW

1	DRAIN
2	RED
3	BLACK
4	WHITE
5	BLUE

WIRING CHART

VOLTAGE RATING	30VAC/36VDC
AMPERAGE RATING	4 AMPS
PROTECTION	IP67
OPERATING TEMPERATURE	-25°C TO 90°C
CSA CERTIFICATIONS	CSA CERTIFIED, FILE NO. LR6837

ITEM		COMPONENT	MATERIAL	FINISH
1	1	INSERT	POLYAMIDE	BLACK
2	5	CONTACTS	COPPER ALLOY	SILVER PLATED
3	1	O-RING	NITRILE	BLACK
4	1	COUPLING NUT	BRASS	NICKEL PLATED
5	1	MOLDED BODY	POLYAMIDE	BLACK
6	1	GROMMET	NITRILE	BLACK
7	1	CORD GRIP BODY	POLYAMIDE	BLACK

RELEASE
EC NO: WNA2010-0081 8/25/09
DRWN: TWOLDEGE ---
CH'KD: BWOODMAN
APPR: JFMURPHY 2009/08/27
DESCRIPTION
REV A

QUALITY SYMBOL
▼=0
C=0

GENERAL TOLERANCES (UNLESS SPECIFIED)

	mm	INCH
4 PLACES	±----	±----
3 PLACES	±----	±----
2 PLACES	±----	±.01
1 PLACE	±0.3	±----
ANGULAR ±----°		

DRAFT WHERE APPLICABLE MUST REMAIN WITHIN DIMENSIONS

DIMENSION STYLE: ----
SCALE: ----
DESIGN UNITS: INCH
THIRD ANGLE PROJECTION

DRAWN BY: TWOLDEGE DATE: 2009/08/25
CHECKED BY: BWOODMAN DATE: 2009/08/25
APPROVED BY: JFMURPHY DATE: 2009/08/26

TITLE: MIC 5P MALE ATTACH D-NET .16-.32 O.D. CABLE RANGE PG7 CABLE FITTING

molex MOLEX INCORPORATED

MATERIAL NO.: 1300340008
DOCUMENT NO.: SD-130034-004
SHEET NO.: 1 OF 1
SIZE: C

THIS DRAWING CONTAINS INFORMATION THAT IS PROPRIETARY TO MOLEX INCORPORATED AND SHOULD NOT BE USED WITHOUT WRITTEN PERMISSION

Downloaded from Arrow.com.