© 2024 TE Connectivity. All Rights Reserved.

| REVISIONS | | | | | |
|---|---|---|---|---|---|
| P | LTR | DESCRIPTION | DATE | DWN | APVD |
| | D1 | REVISED PER ECO-09-026444 | 27NOV2009 | AEG | - |
| | D2 | REVISED PER ECR-17-014951 | 16OCT2017 | KR | - |
| | E | REVISED PER ECR-24-218682 | 09SEP2024 | AK | BR |
| | | | | | |

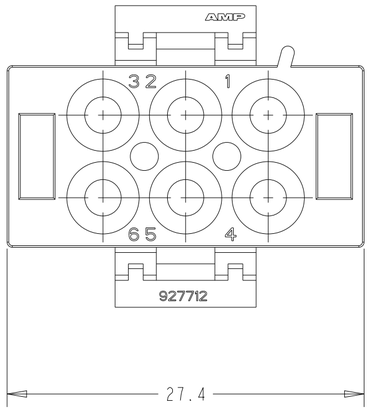


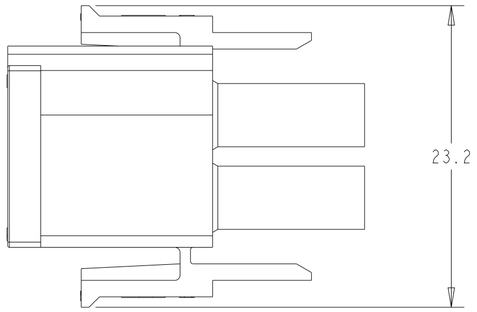


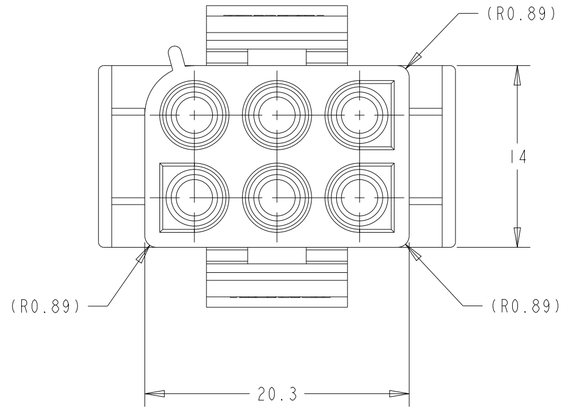


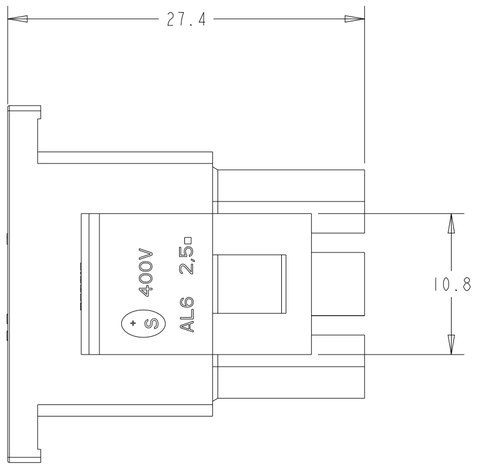


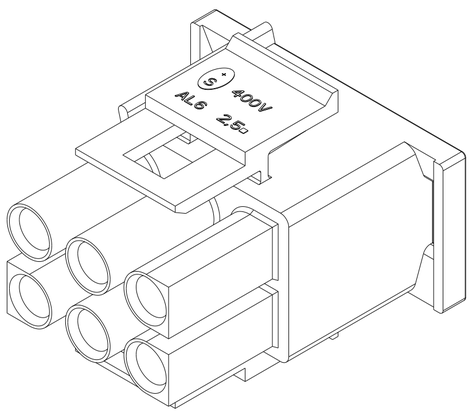


1 Geeignet fur UMNL stift-und Buchsenkontakte

2 Nur passend zu PN 927713.

3 Für automatische Bestückung geeignet

△4 NEUES MATERIAL (PHOSPHOR UND HALOGEN FREI)

△5 OBSOLETE PARTS: OBSOLETE CIS STREAMLINING PER D.RENAUD/D.SINISI

6 DIMENSIONS SHOWN REPRESENT PRODUCT IN DRY, AS MOLDED, CONDITION. ADDITIONAL 2% GROWTH DUE TO SUBSEQUENT MOISTURE ABSORPTION MAY OCCUR AND SHOULD BE ACCOUNTED FOR.

| | | |
|---|---|---|
| 927712-4 | PA6.6 UL94 V-0 | Weiß |
| 927712-3 | PA6.6 UL94 V-0 | △4 NATURE |
| 927712-2 | PA6.6 UL94 V-0 | Schwarz |
| ~~927712-1~~ | PA6.6 UL94 V-2 | Natur |
| Bestell-Nr. | Werkstaff | oberfläche / Farbe |

△5 OBSOLETE

THIS DRAWING IS A CONTROLLED DOCUMENT.

DIMENSIONS: mm

TOLERANCES UNLESS OTHERWISE SPECIFIED: ±0.2
0 PLC ±-
1 PLC ±-
2 PLC ±-
3 PLC ±-
4 PLC ±-
ANGLES ±-

MATERIAL: SEE TABLE -

FINISH: - -

DWN A.HERRANZ 25AUG1983
CHK J. SALO 26AUG1983
APVD - 26AUG1983
PRODUCT SPEC -
APPLICATION SPEC -
WEIGHT -

CUSTOMER DRAWING

TE Connectivity

NAME
UMNL 6-WAY PLUG HSG
POLARIZING CAVITIES CHANGED
-

| SIZE | CAGE CODE | DRAWING NO | RESTRICTED TO |
|---|---|---|---|
| A2 | 00779 | C-927712 | - |

SCALE 3:1 SHEET 1 OF 1 REV E

1471-9 (3/13)

Downloaded from Arrow.com.