CUI Devices is now Same Sky! Learn More



# SERIES: CPT-2416-85T | DESCRIPTION: PIEZO BUZZER INDICATOR

## FEATURES

- 12 Vdc rated
- 85 dB
- through hole

## SPECIFICATIONS

| parameter | conditions/description | min | typ | max | units |
|---|---|---|---|---|---|
| rated voltage | | | 12 | | Vdc |
| operating voltage | | 8 | | 16 | Vdc |
| current consumption | at rated voltage | | | 16 | mA |
| rated frequency | | 2,400 | 2,900 | 3,400 | Hz |
| sound pressure level | at 30 cm, rated voltage | 85 | | | dB |
| tone | continuous at rated voltage | | | | |
| dimensions | Ø23.8 x16.0 | | | | mm |
| weight | | | | 4.5 | g |
| material | ABS (UL94V-0) | | | | |
| terminal | pins (gold plated) | | | | |
| operating temperature | | -30 | | 85 | °C |
| storage temperature | | -40 | | 95 | °C |
| washable | no | | | | |
| RoHS | yes | | | | |

Notes: 1. All specifications measured at 5~35°C, humidity at 45~85%, under 86~106kPa pressure, unless otherwise noted.

## SOLDERABILITY

| parameter | conditions/description | min | typ | max | units |
|---|---|---|---|---|---|
| hand soldering | maximum 3 seconds | 340 | 350 | 360 | °C |



Downloaded from Arrow.com.

## MECHANICAL DRAWING

units: mm
tolerance: ±0.5 mm

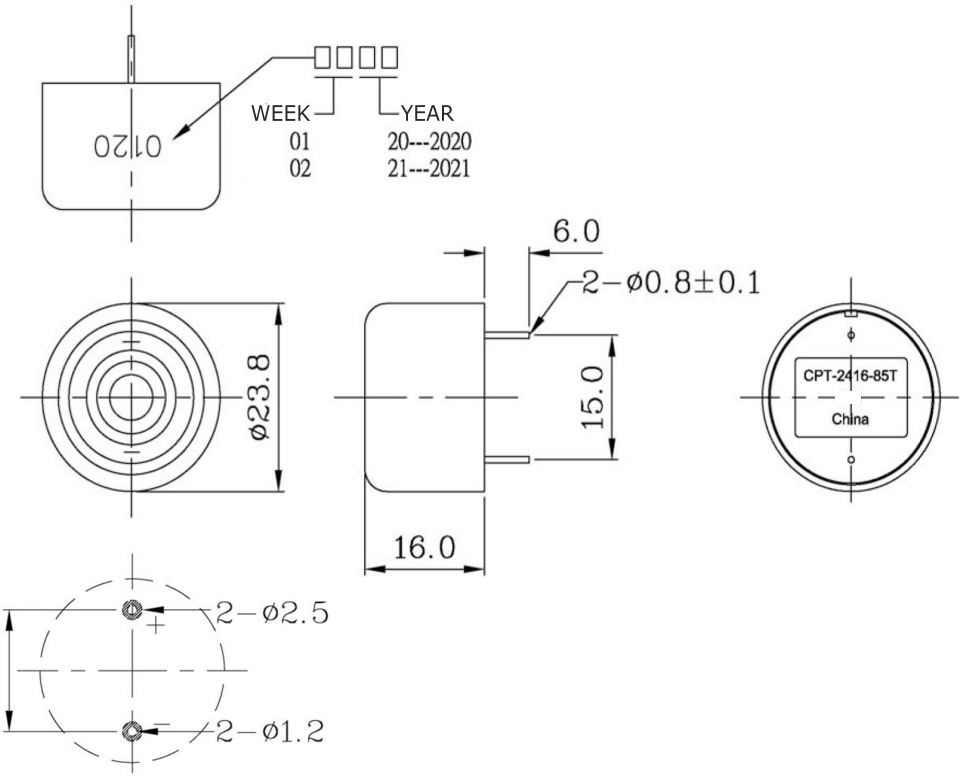


Recommended PCB Layout
Top View

## PERFORMANCE CURVES

P: Voltage vs. Sound Pressure Level
I: Voltage vs. Current Consumption

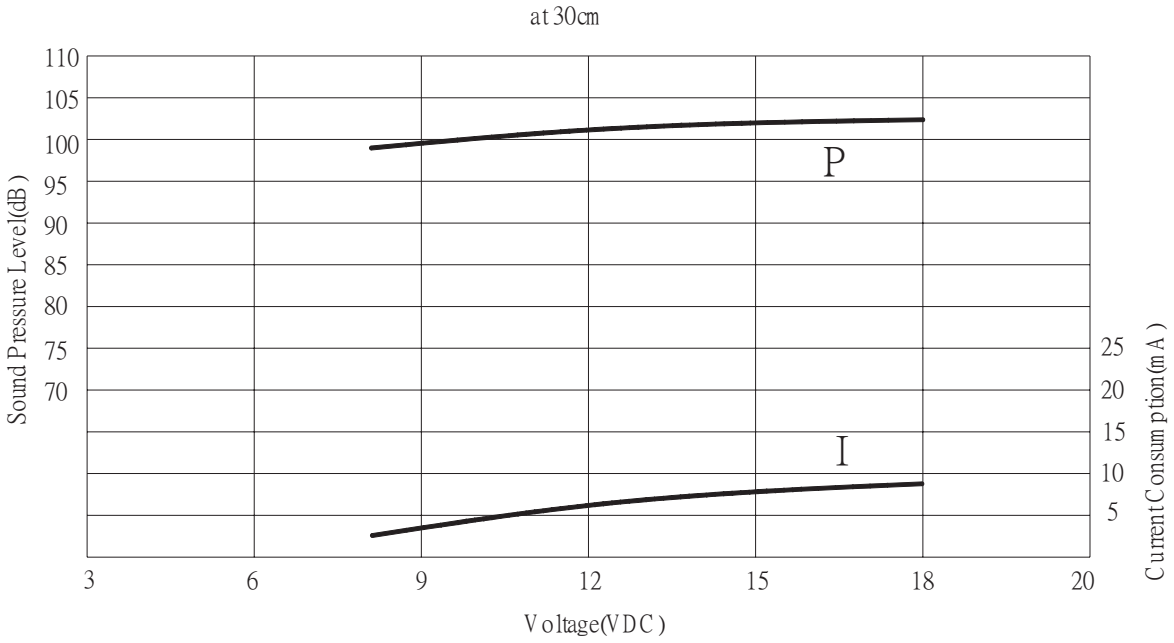




Downloaded from Arrow.com.

## PACKAGING

units: mm

Carton Size: 550 x 330 x 290 mm
Carton QTY: 2,500 pcs per carton

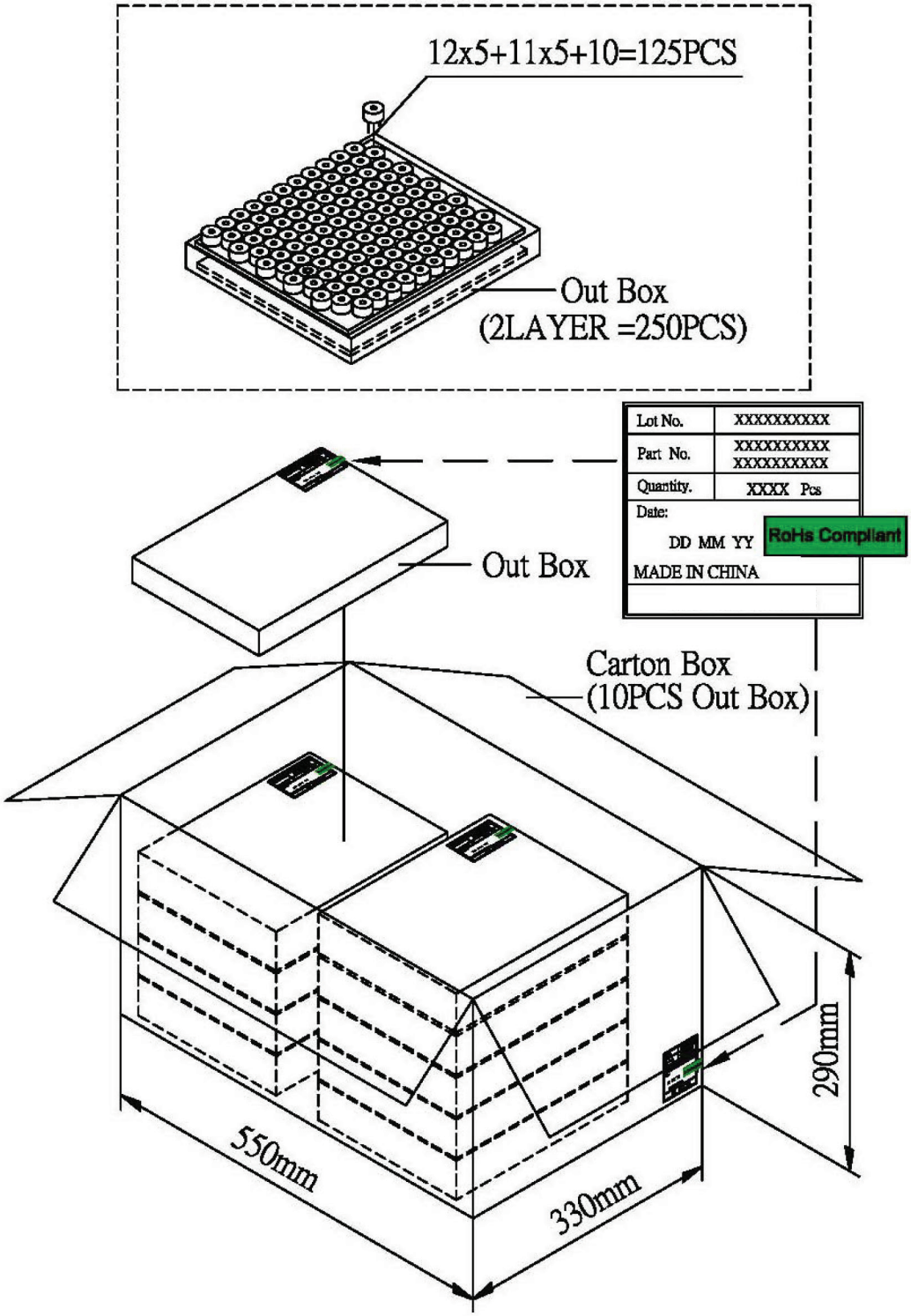




Downloaded from Arrow.com.

## REVISION HISTORY

| rev. | description | date |
|---|---|---|
| 1.0 | initial release | 09/15/2020 |
| 1.01 | logo, datasheet style update | 08/05/2022 |
| 1.02 | CUI Devices rebranded to Same Sky | 09/11/2024 |

The revision history provided is for informational purposes only and is believed to be accurate.

Same Sky offers a one (1) year limited warranty. Complete warranty information is listed on our website.

Same Sky reserves the right to make changes to the product at any time without notice. Information provided by Same Sky is believed to be accurate and reliable. However, no responsibility is assumed by Same Sky for its use, nor for any infringements of patents or other rights of third parties which may result from its use.

Same Sky products are not authorized or warranted for use as critical components in equipment that requires an extremely high level of reliability. A critical component is any component of a life support device or system whose failure to perform can be reasonably expected to cause the failure of the life support device or system, or to affect its safety or effectiveness.



Downloaded from Arrow.com.