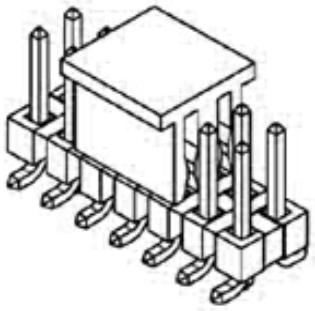

Part Number : 879209115
Product Description : 2.54mm Pitch C-Grid Header, Surface Mount, Dual Row, Vertical, 14 Circuits, 0.38µm Gold (Au) Plating, with Pick-and-Place Cap, without Peg, Tape on Reel Packaging, Lead-Free
Series Number : 87920
Status : Active
Product Category : PCB Headers and Receptacles

Documents and Resources

Drawings

879209115_sd.pdf

PK-89990-479-001.pdf

3D Models and Design Files

STEP AP242

SOLIDWORKS

Creo

Symbol and Footprint (Multi-Format)

Specifications

713080001-AS-000.pdf

PS-87920-019-001.pdf

879200001-TS-000.pdf

Product Environment Compliance

Compliance

GADSL/IMDS	Compliant with Exemption 44; 34; 33
China RoHS	per SJ/T 11365-2006
EU ELV	Not Relevant
Low-Halogen Status	Low-Halogen per IEC 61249-2-21
REACH SVHC	Not Contained per D(2025)7771-DC (04 Feb 2026)
EU RoHS	Compliant per EU 2015/863

Compliance Statements

Downloaded from Arrow.com.

- EU RoHS
- REACH SVHC
- Low-Halogen

Industry Documents
- IPC 1752A Class C
- IPC 1752A Class D
- Molex Product Compliance Declaration
- IEC-62474
- chemSHERPA (xml)

Substances of Interest
- PFAS

EU RoHS Certificate of Compliance

Additional Product Compliance Information

Part Details

General

Status	Active
Category	PCB Headers and Receptacles
Series	87920
Description	2.54mm Pitch C-Grid Header, Surface Mount, Dual Row, Vertical, 14 Circuits, 0.38µm Gold (Au) Plating, with Pick-and-Place Cap, without Peg, Tape on Reel Packaging, Lead-Free
Application	Board-to-Board, Wire-to-Board
Component Type	PCB Header
Product Name	C-Grid
UPC	883906437107

Agency

UL	E29179

Electrical

Current - Maximum per Contact	3.0A
Voltage - Maximum	250V

Physical

Downloaded from Arrow.com.

Breakaway	Yes
Circuits (Loaded)	14
Circuits (maximum)	14
Color - Resin	Black
First Mate / Last Break	No
Glow-Wire Capable	No
Guide to Mating Part	No
Keying to Mating Part	No
Lock to Mating Part	No
Mated Height	6.10mm
Material - Metal	Copper Alloy
Material - Plating Mating	Gold
Material - Plating Termination	Tin
Material - Resin	High Temperature Thermoplastic
Net Weight	0.712/g
Number of Rows	2
Orientation	Vertical
Packaging Type	Embossed Tape on Reel
PCB Locator	No
PCB Retention	No
PCB Thickness - Recommended	1.60mm
Pitch - Mating Interface	2.54mm
Pitch - Termination Interface	2.54mm
Plating min - Mating	0.381µm
Plating min - Termination	2.032µm
Polarized to Mating Part	No
Polarized to PCB	No
Robotic Placement	Pick and Place Cap
Shrouded	Unshrouded
Stackable	No
Temperature Range - Operating	-55° to +105°C
Termination Interface Style	Surface Mount

Solder Process Data

Max-Duration	10

Downloaded from Arrow.com.

Lead-Free Process Capability	REFLOW
Max-Cycle	3
Max-Temp	260

Mates With / Use With

Mates with Part(s)

Description	Part Number
SL Dual Row Crimp Housings	70450
C-Grid Vertical, Dual Row, High Profile, Through Hole PCB Receptacles	71850
2.54mm Pitch C-Grid Shunt Terminal Housings	7859

Downloaded from Arrow.com.