PRODUCT CATALOG

HIROSE ELECTRIC CO.,LTD.

DF1E Series

2.5mm Pitch Connectors for Positive Lock and Discrete Wire Connection (UL, C-UL Certified)

SignalBee™

P= 2.5 mm

P=2.5mm

Crimping

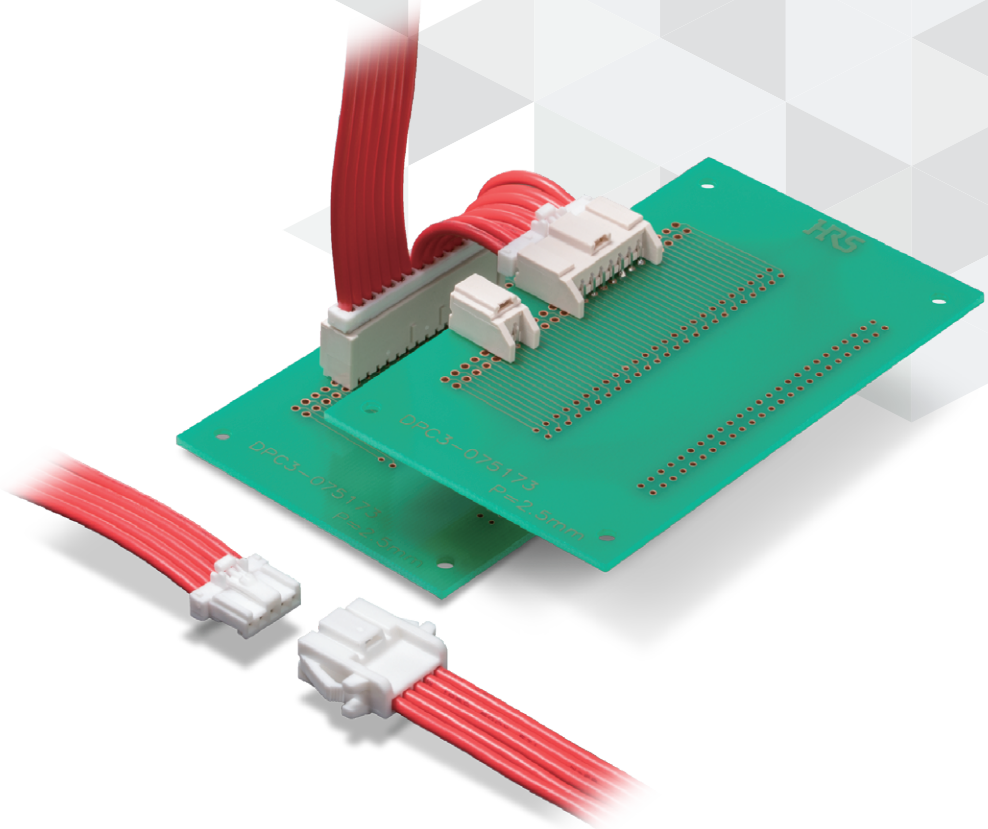

Jun.1.2025 Copyright 2025 HIROSE ELECTRIC CO., LTD. All Rights Reserved.

Product Page
https://www.hirose.com/en/product/series/DF1E

Jun. 2024

Downloaded from Arrow.com.

Features

1. Positive Lock Function Added

The inner lock system adopts a positive lock mechanism.
This mechanism prevents disengagement to occur due to an unexpected external shock.

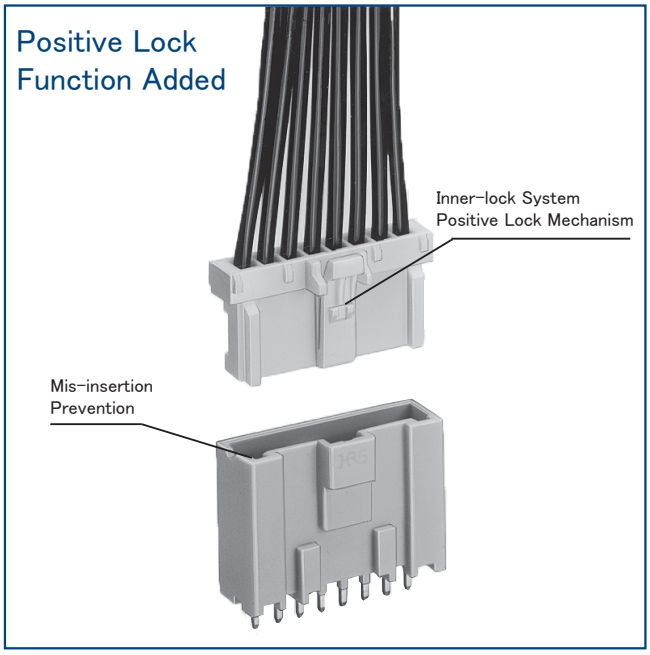

2. Increase in Crimping Contact Retention Force and Incomplete Insertion Prevention

When the double lock is used, it prevents stress to the cable, increases the crimp contact retention force, and prevents the incomplete insertion of the crimp contact.

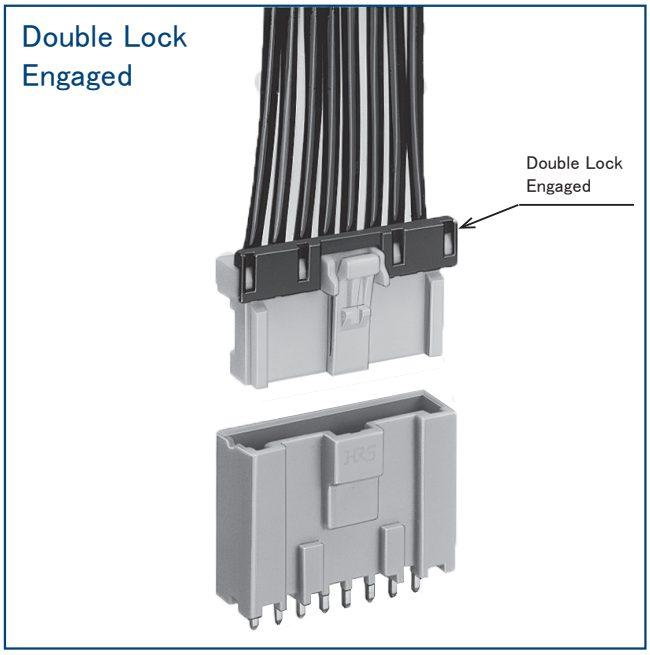

3. Molded-in Contact Retention Tabs

Handling of terminated contacts after the crimping is easier and avoids entangling of wires, since there are no protruding metal tabs.

4. Mis-insertion Prevention

Equipped with the mechanism to completely prevent reverse insertion and insertion between dissimilar contacts.

Jun.1.2025 Copyright 2025 HIROSE ELECTRIC CO., LTD. All Rights Reserved.

Downloaded from Arrow.com.

5. Solder Crack Prevention

Glass-reinforced resin is used on the pin header to prevent solder cracks due to thermal contraction.

6. Production Facility Cost Reduction

The female crimping contact uses the DF1B series crimping contact, which has been conventionally marketed. Investment for new facilities isn't needed.
However, if the retainer is installed in the cable with 22 AWG or more wire, use the DF1E crimping contact. The male crimping contact for in-line is used together with the DF1B applicator. Therefore, no investment is needed for new facilities.

7. Various Applications

With the same series, various applications can be used for the board solder THT type and in-line.

8. UL, C-UL Certified

UL, C-UL File No. E52653
UL : U. S. A.
C-UL : CANADA

Jun.1.2025 Copyright 2025 HIROSE ELECTRIC CO., LTD. All Rights Reserved.

Downloaded from Arrow.com.

Jun.1.2025 Copyright 2025 HIROSE ELECTRIC CO., LTD. All Rights Reserved.

Products Specifications

Rated Current (Note 1)	20 to 24 AWG : 3A/pin 26 AWG : 2A/pin 28 AWG : 1A/pin 30 AWG : 0.5A/pin	Operating Temperature (Note 2)	-35 to +85℃
		Operating Humidity (Note 3)	40 to 80%
Rated Voltage	250V AC/DC	Storage Temperature (Note 4)	-10 to +60℃
		Storage Humidity (Note 4)	40 to 70%

UL, C-UL Certified	Rated Current (Note 1)	20 to 22 AWG : 3A/pin 24 to 28 AWG : 1A/pin 30 AWG : 0.5A/pin
	Rated Voltage	29.9V AC/DC

Items	Specifications	Conditions
Contact Resistance	30mΩ Max.	Measured at 1mA and 20mV Max.
Insulation Resistance	1,000MΩ Min.	Measured at 500V DC
Withstanding Voltage	No insulation breakdown	650V AC for 1 min.
Mating Durability	30mΩ Max.	Tin Plating : 30 times, Gold Plating : 50 times
Vibration Resistance	No electrical discontinuity of 1μs or more.	Frequency : 10 to 55 Hz, Single amplitude of 0.75mm, 2 hours in each of the 3 directions.
Shock Resistance	No electrical discontinuity of 1μs or more.	Acceleration of 490m/s^2, 11ms, Sine halfwave : 3 times each in 3 axial directions
Humidity Resistance	30mΩ Max.	96 hours at temperature of 40±2℃ and humidity of 90% to 95%
Temperature Cycles	30mΩ Max.	(-55℃ : 30 minutes → 5 to 35℃ : 5 minutes → 85℃ : 30 minutes → 5 to 35℃ : 5 minutes) 5 cycles
Solder Heat Resistance	No deformation of components affecting performance.	Flow : 260℃ , 10sec. Hand soldering : temperature of soldering iron at 300℃ for 3sec.

Note 1 : The rated current depends on the wire size used. Current rating of header is 3A.
Note 2 : Includes the temperature rise due to current flow.
Note 3 : Use without condensation on parts.
Note 4 : Applicable to unused product packaging.
Note 5 : Information contained in this catalog represents general requirements for this Series.
Contact us for the drawings and specifications for a specific part number shown.

Materials / Finish

Product	Part	Material	Finish	Remarks	RoHS2
Socket	Insulator	Polyamide	White	UL94V-0	Yes
Header	Insulator	Polyamide (glass-reinforced)	Beige	UL94V-0	
	Contact	Brass	Tin Plating or Gold Plating	-	
In-line Plug	Insulator	Polyamide	White	UL94V-0	
Retainer	Insulator	Polyamide	Black	UL94V-0	
Crimping Contact	Contact	Phosphor Copper	Tin Plating or Gold Plating	-	

Downloaded from Arrow.com.

Product Number Structure

Refer to the chart below when determining the product specifications from the product number.
Please select from the product numbers listed in this catalog when placing orders.

Pin Header

DF1E C - ## P - 2.5 DSA
❶ ❷ ❸ ❹ ❺ ❻

❶ Series Name	DF1E	❹ Connector Type	P : Pin Header
❷ Hold Type	Blank : Right Angle Pin Header C : Straight Pin Header	❺ Contact Pitch	2.5mm
❸ No. of Pos.	2-15pos.	❻ Terminal Style	DSA : Straight THT DS : Right Angle THT

Socket

DF1E - ## S - 2.5 C
❶ ❷ ❸ ❹ ❺

❶ Series Name	DF1E	❹ Contact Pitch	2.5mm
❷ No. of Pos.	2-15pos.	❺ Terminal Style	C : Crimping Housing
❸ Connector Type	S : Socket		

In-line Plug

DF1E A - ## EP - 2.5 C
❶ ❷ ❸ ❹ ❺ ❻

❶ Series Name	DF1E	❹	EP : In-line Plug
❷ In-line Plug Type	Blank : With Panel Mount Lock A : Without Panel Mount Lock	❺ Contact Pitch	2.5mm
❸ No. of Pos.	2-10pos.	❻ Terminal Style	C : Crimping Housing

Jun.1.2025 Copyright 2025 HIROSE ELECTRIC CO., LTD. All Rights Reserved.

Downloaded from Arrow.com.

Jun.1.2025 Copyright 2025 HIROSE ELECTRIC CO., LTD. All Rights Reserved.

■ Crimp Contact

DF1E - ## SCF
❶ ❷ ❸

❶ Series Name	Socket Side : DF1B (Note) , DF1E (Note) Plug Side : DF1E	❸ Contact Type / Packaging Type / Plating Type	SCF : Female Contact/Reel/Tin Plating SCFA : Female Contact/Reel/Gold Plating SC : Female Contact/Pack/Gold Plating SCA : Female Contact/Pack/Gold Plating PCF : Male Contact/Reel/Tin Plating PCFA : Male Contact/Reel/Gold Plating PC : Male Contact/Pack/Tin Plating PCA : Male Contact/Pack/Gold Plating
❷ Applicable Cable Size	2022 : 20 to 22 AWG 2428 : 24 to 28 AWG 30 : 30 AWG		

Note : When the retainer is used, use DF1E-2022SC(F)(A), DF1B-2428SC(F)(A), and DF1B-30SC(F)(A) contacts.
When no retainer is used, all DF1B-##SC(F)(A) and DF1E-2022SC(F)(A) contacts can be used.

■ Retainer

DF1E - ## RS/P - 2.5
❶ ❷ ❸ ❹

❶ Series Name	DF1E	❸ Connector Type	RS/P : Retainer Commonly used for socket and in-line plug
❷ No. of Pos.	2-10pos.	❹ Contact Pitch	2.5mm

Application Pattern

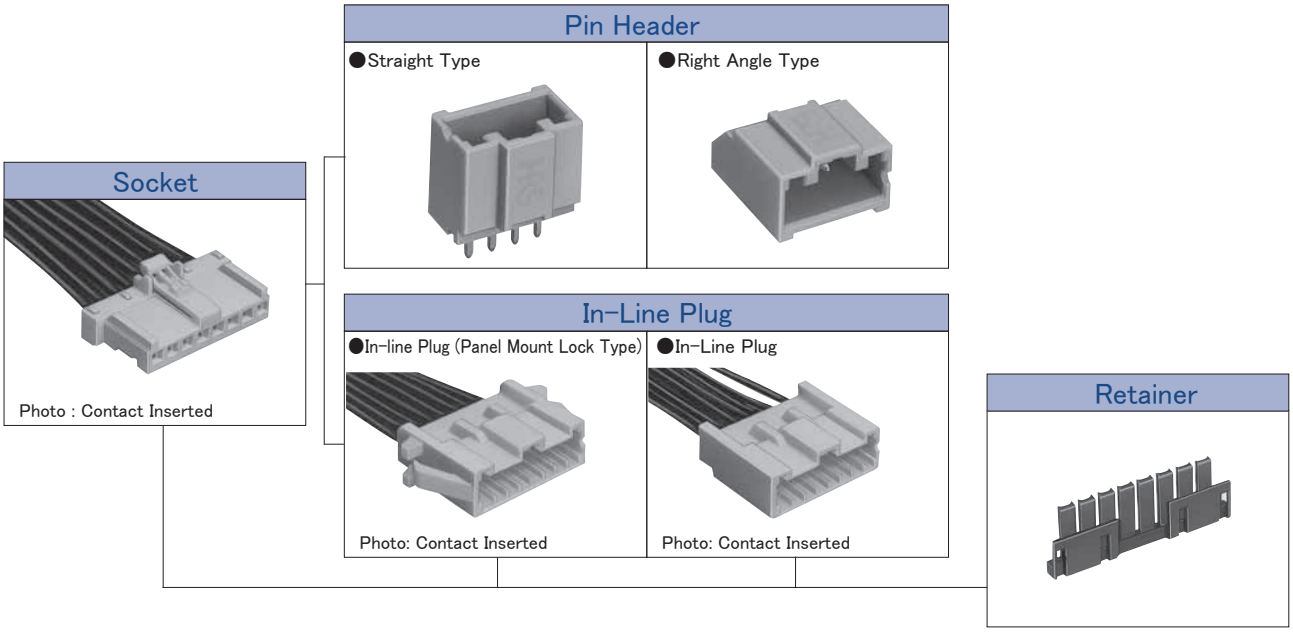

Downloaded from Arrow.com.

Mated Dimensions

●Standard Header

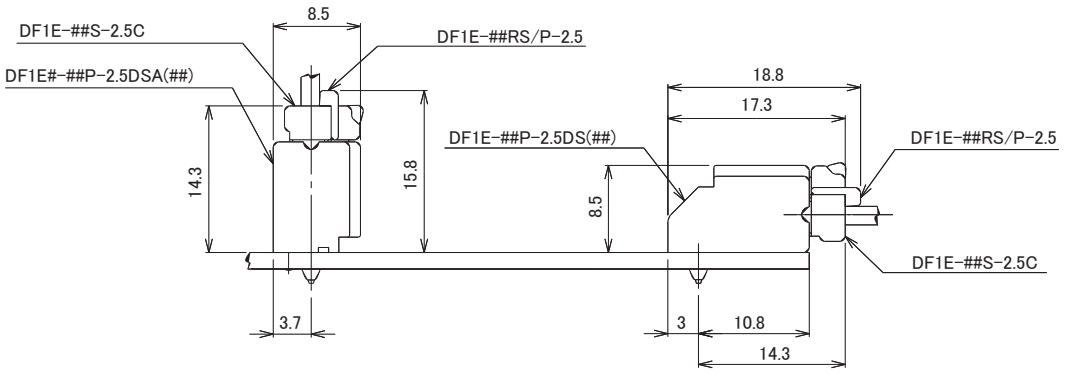

●Panel Mounting Lock In-line Plug

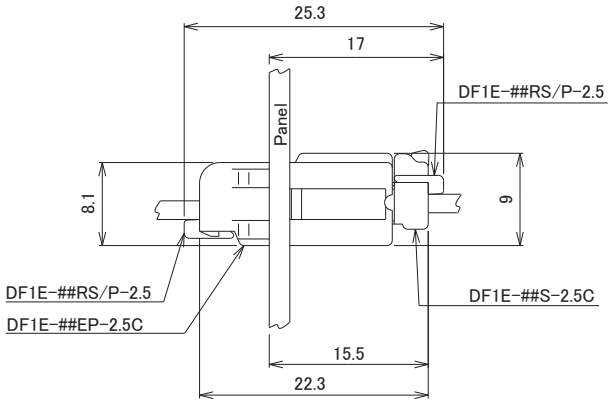

●In-line Plug

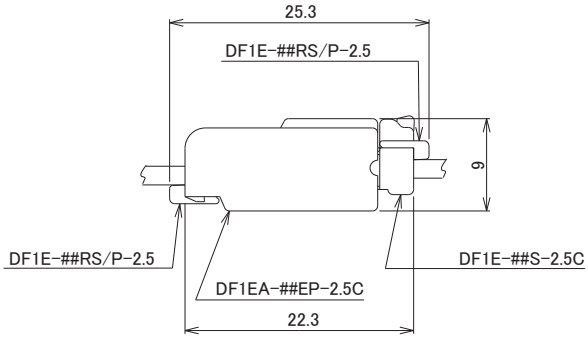

Jun.1.2025 Copyright 2025 HIROSE ELECTRIC CO., LTD. All Rights Reserved.

Downloaded from Arrow.com.

Right Angle Pin Header

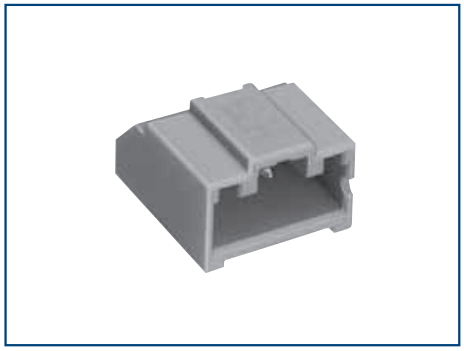

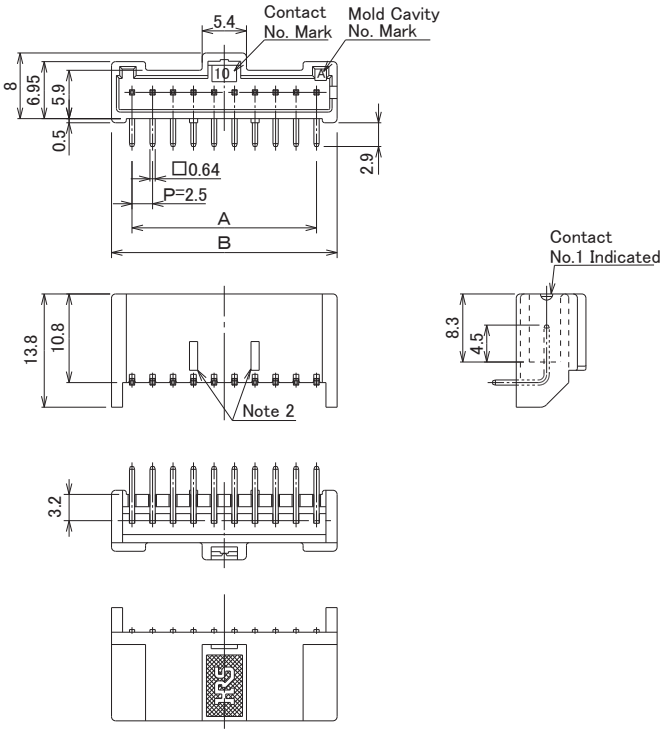

Unit : mm

Part No.	HRS No.	No. of Pos.	A	B	Purchase Unit
DF1E-2P-2.5DS(##)	CL0541-0985-0-##	2	2.5	7.5	100pcs per bag
DF1E-3P-2.5DS(##)	CL0541-0986-3-##	3	5.0	10.0	
DF1E-4P-2.5DS(##)	CL0541-0987-6-##	4	7.5	12.5	
DF1E-5P-2.5DS(35)	CL0541-0988-9-35	5	10.0	15.0	
DF1E-6P-2.5DS(35)	CL0541-0989-1-35	6	12.5	17.5	
DF1E-8P-2.5DS(##)	CL0541-0991-3-##	8	17.5	22.5	
DF1E-9P-2.5DS(35)	CL0541-0992-6-35	9	20.0	25.0	
DF1E-10P-2.5DS(##)	CL0541-0993-9-##	10	22.5	27.5	
DF1E-12P-2.5DS(35)	CL0541-0995-4-35	12	27.5	32.5	
DF1E-14P-2.5DS(35)	CL0541-0997-0-35	14	32.5	37.5	
DF1E-15P-2.5DS(35)	CL0541-0998-2-35	15	35.0	40.0	

[Specification No.]
(36) : Gold Plating
(35) : Tin Plating

Note 1 : The 2 to 4 positions differ in two convex portions from those in above figures.
The 2 and 3 positions are not contained, but the 4 position is contained in the center at one point.
Note 2 : Styles of 2 to 4 positions connectors partially differ from those in above figures.

●PCB Mounting Pattern (Board Thickness t = 1.6 ± 0.1)

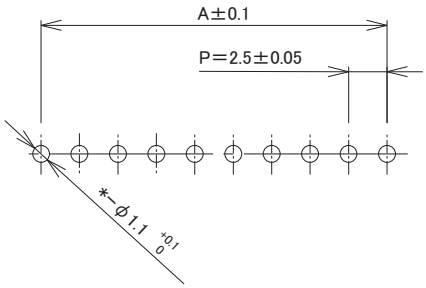

Jun.1.2025 Copyright 2025 HIROSE ELECTRIC CO., LTD. All Rights Reserved.

Downloaded from Arrow.com.

Straight Pin Header

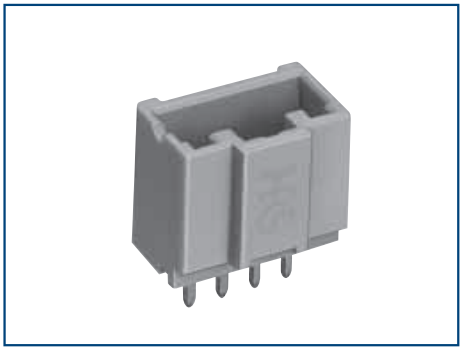

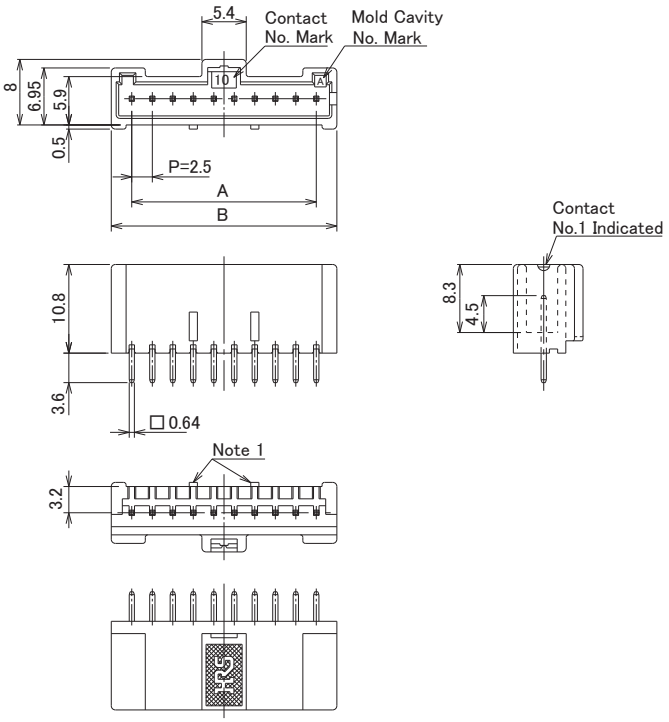

Unit : mm

Part No.	HRS No.	No. of Pos.	A	B	Purchase Unit
DF1EC-2P-2.5DSA(##)	CL0541-0867-4-##	2	2.5	7.5	100pcs per bag
DF1EC-3P-2.5DSA(##)	CL0541-0868-7-##	3	5.0	10.0	
DF1EC-4P-2.5DSA(##)	CL0541-0869-0-##	4	7.5	12.5	
DF1EC-6P-2.5DSA(##)	CL0541-0871-1-##	6	12.5	17.5	
DF1EC-7P-2.5DSA(##)	CL0541-0872-4-##	7	15.0	20.0	
DF1EC-8P-2.5DSA(##)	CL0541-0873-7-##	8	17.5	22.5	
DF1EC-9P-2.5DSA(##)	CL0541-0874-0-##	9	20.0	25.0	
DF1EC-10P-2.5DSA(##)	CL0541-0875-2-##	10	22.5	27.5	
DF1EC-11P-2.5DSA(35)	CL0541-0876-5-35	11	25.0	30.0	
DF1EC-12P-2.5DSA(##)	CL0541-0877-8-##	12	27.5	32.5	
DF1EC-14P-2.5DSA(35)	CL0541-0879-3-35	14	32.5	37.5	
DF1EC-15P-2.5DSA(35)	CL0541-0880-2-35	15	35.0	40.0	

[Specification No.]
(36) : Gold Plating
(35) : Tin Plating

Note 1 : The 2 to 4 positions differ in two convex portions from those in above figures.
The 2 and 3 positions are not contained, but the 4 contact connector is contained in the center at one point.
Note 2 : Styles of 2 to 4 positions connectors partially differ from those in above figures.

●PCB Mounting Pattern (Board Thickness t = 1.6 ± 0.1)

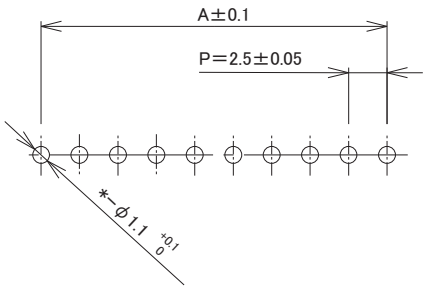

Jun.1.2025 Copyright 2025 HIROSE ELECTRIC CO., LTD. All Rights Reserved.

Downloaded from Arrow.com.

In-line Plug (Panel Mount Lock Type)

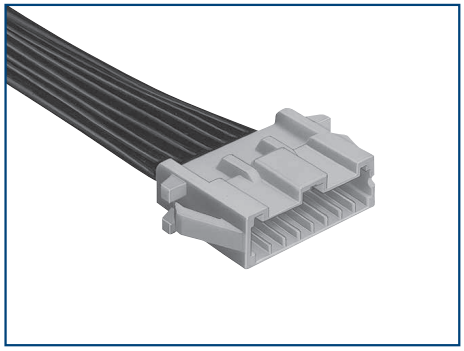

Photo: Contact Inserted

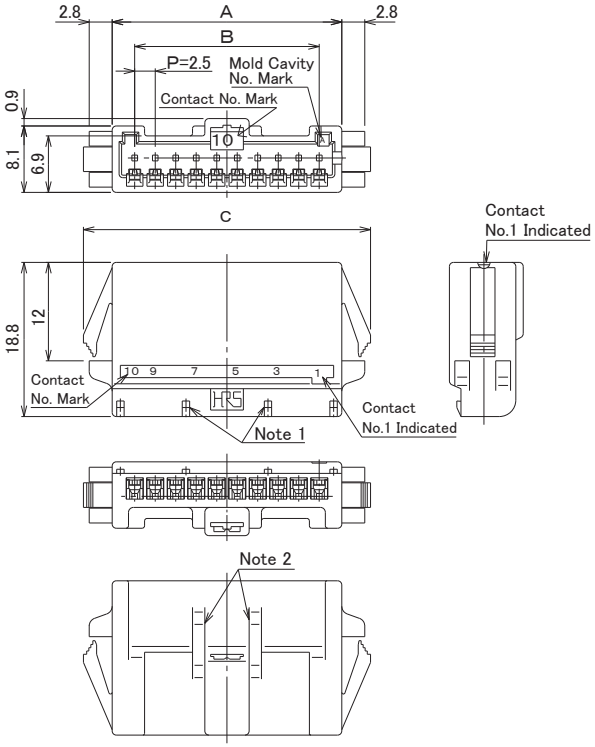

Unit : mm

Part No.	HRS No.	No. of Pos.	A	B	C	D	E	Purchase Unit
DF1E-2EP-2.5C	CL0541-0943-0-00	2	8.0	2.5	15.0	8.4	11.9	100pcs per bag
DF1E-3EP-2.5C	CL0541-0944-3-00	3	10.5	5.0	17.5	10.9	14.4	
DF1E-4EP-2.5C	CL0541-0945-6-00	4	13.0	7.5	20.0	13.4	16.9	
DF1E-5EP-2.5C	CL0541-0946-9-00	5	15.5	10.0	22.5	15.9	19.4	
DF1E-6EP-2.5C	CL0541-0947-1-00	6	18.0	12.5	25.0	18.4	21.9	
DF1E-8EP-2.5C	CL0541-0949-7-00	8	23.0	17.5	30.0	23.4	26.9	
DF1E-10EP-2.5C	CL0541-0951-9-00	10	28.0	22.5	35.0	28.4	31.9	

Note 1 : In regard to 2 to 5 positions, the retainer fixed convex portions are located at both ends.
Note 2 : In regard to 2 to 7 positions, 2 convex portions are different from those in the above figures.
Note 3 : Use the no radius side at the panel edge in the looking area.
Note 4 : Panel fixation is loosened. (May be enlarged according to the panel board thickness.)
Note 5 : Styles of 2 to 4 positions partially differ from those in the above figures.

Jun.1.2025 Copyright 2025 HIROSE ELECTRIC CO., LTD. All Rights Reserved.

Downloaded from Arrow.com.

●Panel Cutout

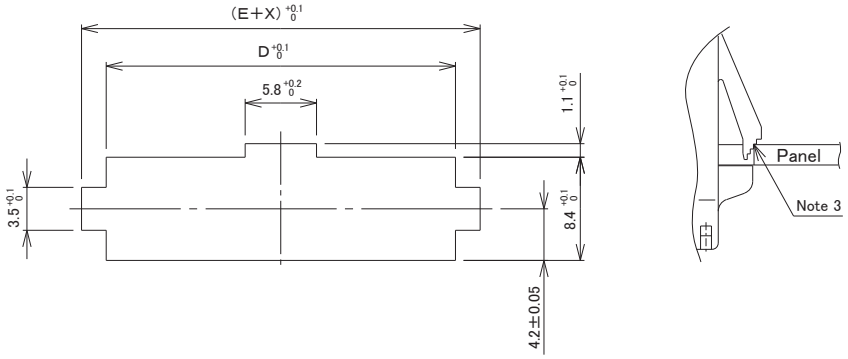

Unit : mm

Panel Thickness	X
1.7 to 2.0	1.5
1.3 to 1.6	1.0
0.9 to 1.2	0.5
0.7 to 0.8	0.0

Jun.1.2025 Copyright 2025 HIROSE ELECTRIC CO., LTD. All Rights Reserved.

Downloaded from Arrow.com.

In-line Plug

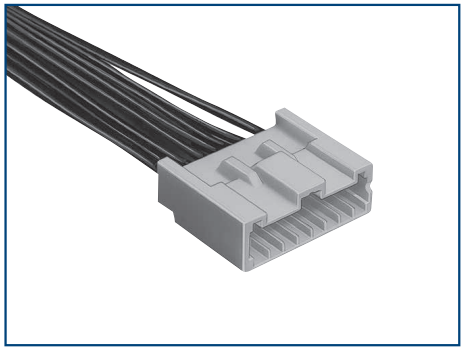

Photo: Contact Inserted

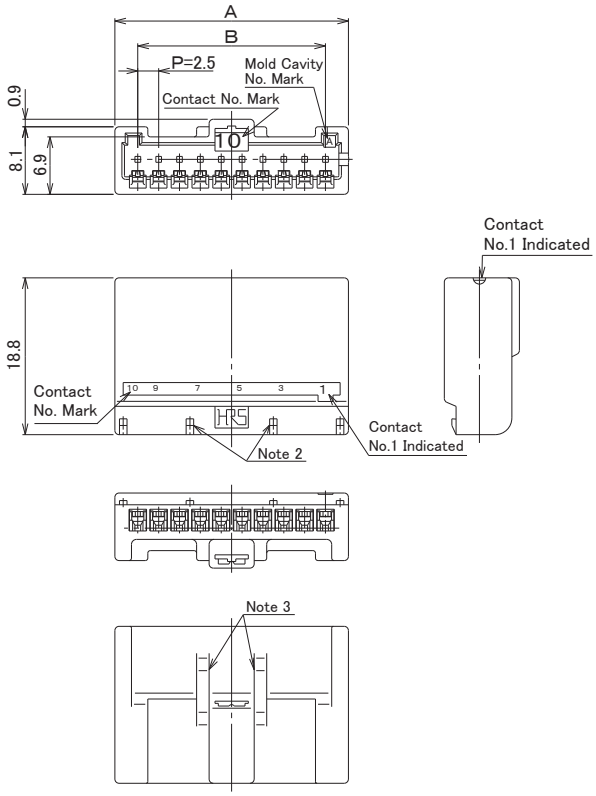

Unit : mm

Part No.	HRS No.	No. of Pos.	A	B	Purchase Unit
DF1EA-2EP-2.5C	CL0541-0957-5-00	2	8.0	2.5	100pcs per bag
DF1EA-3EP-2.5C	CL0541-0958-8-00	3	10.5	5.0	
DF1EA-4EP-2.5C	CL0541-0959-0-00	4	13.0	7.5	
DF1EA-5EP-2.5C	CL0541-0960-0-00	5	15.5	10.0	
DF1EA-6EP-2.5C	CL0541-0961-2-00	6	18.0	12.5	
DF1EA-9EP-2.5C	CL0541-0964-0-00	9	25.5	20.0	
DF1EA-10EP-2.5C	CL0541-0965-3-00	10	28.0	22.5	

Note 1 : In regard to 2 to 5 positions, the retainer fixed convex portions are located at both ends.
Note 2 : 2 to 7 positions do not contain two convex portions, which is different from the above figure.
Note 3 : Styles of 2 to 4 positions partially differ from the above figures.

Jun.1.2025 Copyright 2025 HIROSE ELECTRIC CO., LTD. All Rights Reserved.

Downloaded from Arrow.com.

Socket

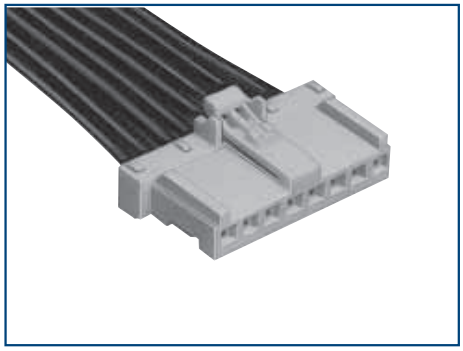

Photo: Contact Inserted

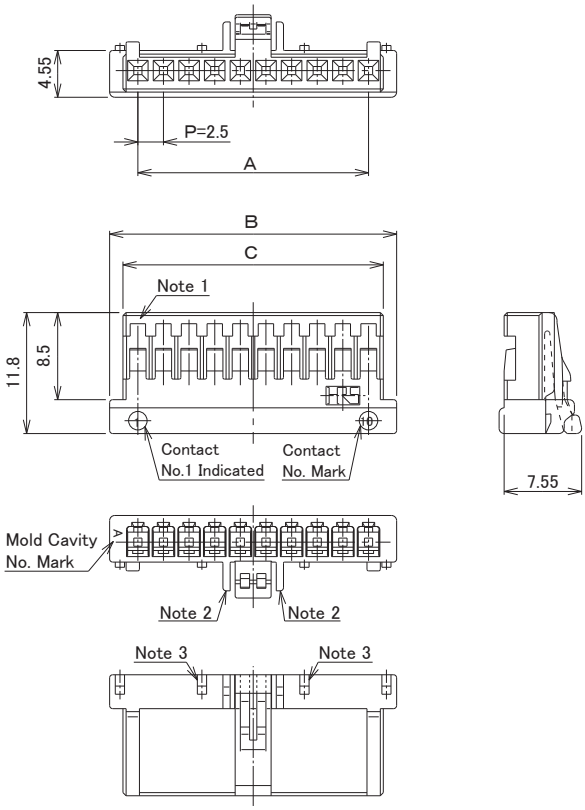

Unit : mm

Part No.	HRS No.	No. of Pos.	A	B	C	Purchase Unit
DF1E-2S-2.5C	CL0541-0811-0-00	2	2.5	8.0	5.4	100pcs per bag
DF1E-3S-2.5C	CL0541-0812-2-00	3	5.0	10.5	7.9	
DF1E-4S-2.5C	CL0541-0813-5-00	4	7.5	13.0	10.4	
DF1E-5S-2.5C	CL0541-0814-8-00	5	10.0	15.5	12.9	
DF1E-6S-2.5C	CL0541-0815-0-00	6	12.5	18.0	15.4	
DF1E-7S-2.5C	CL0541-0816-3-00	7	15.0	20.5	17.9	
DF1E-8S-2.5C	CL0541-0817-6-00	8	17.5	23.0	20.4	
DF1E-9S-2.5C	CL0541-0818-9-00	9	20.0	25.5	22.9	
DF1E-10S-2.5C	CL0541-0819-1-00	10	22.5	28.0	25.4	
DF1E-11S-2.5C	CL0541-0820-0-00	11	25.0	30.5	27.9	
DF1E-12S-2.5C	CL0541-0821-3-00	12	27.5	33.0	30.4	
DF1E-14S-2.5C	CL0541-0823-9-00	14	32.5	38.0	35.4	
DF1E-15S-2.5C	CL0541-0824-1-00	15	35.0	40.5	37.9	

Note 1 : The 2 positions connector is equipped with the convex portion to prevent false-insertion.
Note 2 : The 2 consult Has no wall on the locking side
Note 3 : The 2 to 5 positions contain the retainer fixed convex portions at both ends.

Jun.1.2025 Copyright 2025 HIROSE ELECTRIC CO., LTD. All Rights Reserved.

Downloaded from Arrow.com.

Retainer (For Socket and In-line Plug)

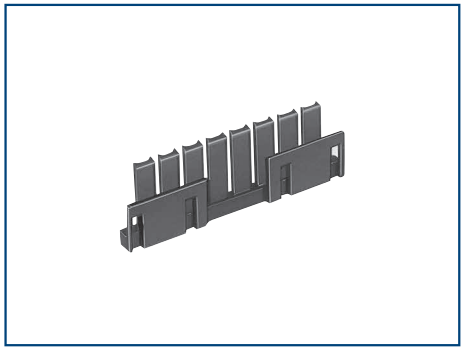

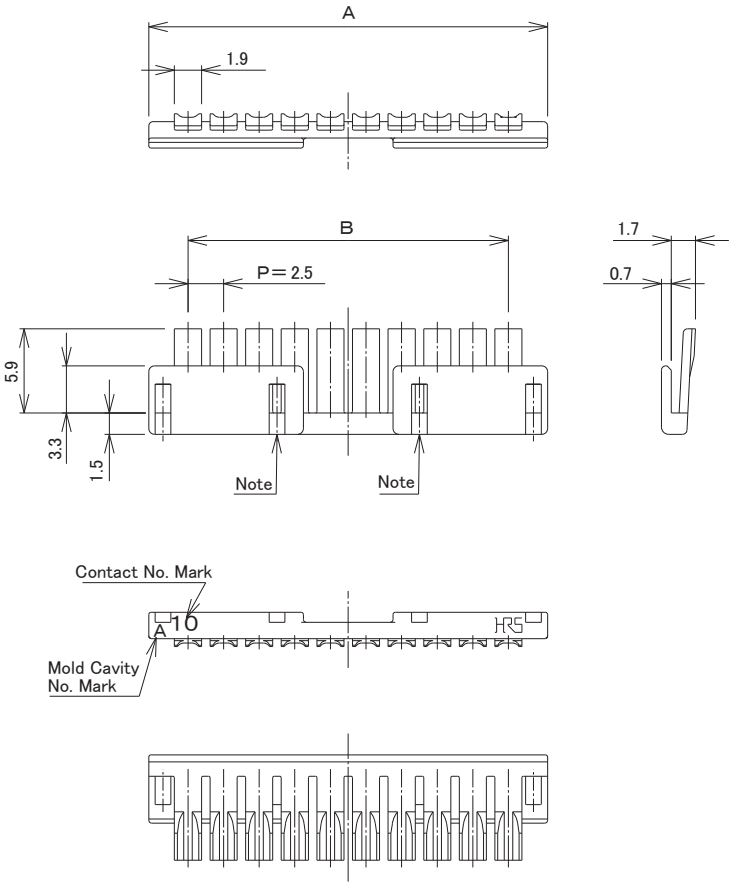

Unit : mm

Part No.	HRS No.	No. of Pos.	A	B	Purchase Unit
DF1E-2RS/P-2.5	CL0541-0971-6-00	2	8.0	2.5	100pcs per bag
DF1E-3RS/P-2.5	CL0541-0972-9-00	3	10.5	5.0	
DF1E-4RS/P-2.5	CL0541-0973-1-00	4	13.0	7.5	
DF1E-5RS/P-2.5	CL0541-0974-4-00	5	15.5	10.0	
DF1E-6RS/P-2.5	CL0541-0975-7-00	6	18.0	12.5	
DF1E-8RS/P-2.5	CL0541-0977-2-00	8	23.0	17.5	
DF1E-10RS/P-2.5	CL0541-0979-8-00	10	28.0	22.5	

Note : The 2 to 5 positions contain socket and plug fixed holes at both ends.

Jun.1.2025 Copyright 2025 HIROSE ELECTRIC CO., LTD. All Rights Reserved.

Downloaded from Arrow.com.

Plug Crimping Contact

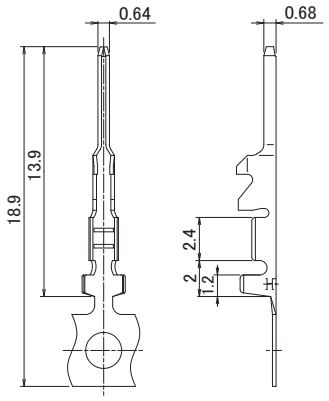

●Reel Contact (Applicable Tool : Applicator)

Part No.	HRS No.	Applicable Wire (Tinned, Annealed Copper Wire) (Note)				Finish	Purchase Unit
		UL	Jacket Diameter	Wire Size	Stranded Wire Conductor		
DF1E-2022PCF	CL0541-0937-8-00	UL1007 UL1061	1.2-1.9mm	20 AWG	21/0.18	Tin Plating	10,000pcs per reel
				22 AWG	17/0.16		
DF1E-2022PCFA	CL0541-1003-0-00			20 AWG	21/0.18	Gold Plating	
				22 AWG	17/0.16		
DF1E-2428PCF	CL0541-0939-3-00		0.9-1.5mm	24 AWG	11/0.16	Tin Plating	
				26 AWG	7/0.16		
				28 AWG	7/0.127		
DF1E-2428PCFA	CL0541-1005-6-00			24 AWG	11/0.16	Gold Plating	
				26 AWG	7/0.16		
				28 AWG	7/0.127		

Note : When using cables other than those specified, contact a Hirose sales representative.

●Loose Contact (Applicable Tool : Manual Crimping Tool)

Part No.	HRS No.	Applicable Wire (Tinned, Annealed Copper Wire) (Note)				Finish	Purchase Unit
		UL	Jacket Diameter	Wire Size	Stranded Wire Conductor		
DF1E-2022PCA	CL0541-1004-3-00	UL1007	1.8mm	20 AWG	21/0.18	Gold Plating	100pcs per bag
			1.6mm	22 AWG	17/0.16		
DF1E-2428PC	CL0541-0940-2-00		1.5mm	24 AWG	11/0.16	Tin Plating	
			1.3mm	26 AWG	7/0.16		
			1.2mm	28 AWG	7/0.127		

Note : Only the above cables are suitable when using the manual crimping tool.

Jun.1.2025 Copyright 2025 HIROSE ELECTRIC CO., LTD. All Rights Reserved.

Downloaded from Arrow.com.

Socket Crimping Contact

●DF1E-2022SCF(A)

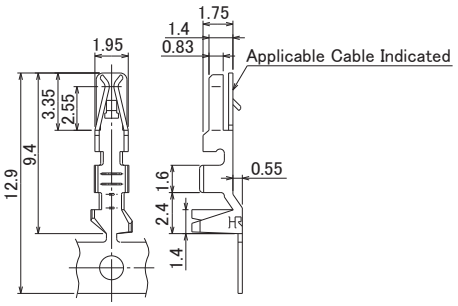

●DF1B-####SCF(A)

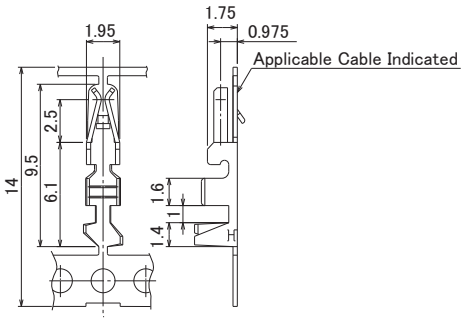

●Reel Contact (Applicable Tool : Applicator)

Part No.	HRS No.	Applicable Wire (Tinned, Annealed Copper Wire) (Note)				Finish	Purchase Unit
		UL	Jacket Diameter	Wire Size	Stranded Wire Conductor		
DF1E-2022SCF	CL0541-0999-5-00	UL1007 UL1061	1.2-1.9mm	20 AWG	21/0.18	Tin Plating	10,000pcs per reel
				22 AWG	17/0.16		
DF1E-2022SCFA	CL0541-1001-5-00			20 AWG	21/0.18	Gold Plating	
				22 AWG	17/0.16		
DF1B-2022SCF	CL0541-0223-1-00			20 AWG	21/0.18	Tin Plating	
				22 AWG	17/0.16		
DF1B-2022SCFA	CL0541-0662-1-00			20 AWG	21/0.18	Gold Plating	
				22 AWG	17/0.16		
DF1B-2428SCF	CL0541-0678-1-00		0.9-1.5mm	24 AWG	11/0.16	Tin Plating	
				26 AWG	7/0.16		
				28 AWG	7/0.127		
DF1B-2428SCFA	CL0541-0680-3-00			24 AWG	11/0.16	Gold Plating	
				26 AWG	7/0.16		
				28 AWG	7/0.127		
DF1B-30SCF	CL0541-0682-9-00		0.6-1.2mm	30 AWG	7/0.1	Tin Plating	
DF1B-30SCFA	CL0541-0684-4-00					Gold Plating	

Note : When using cables other than those specified, contact a Hirose sales representative.

Jun.1.2025 Copyright 2025 HIROSE ELECTRIC CO., LTD. All Rights Reserved.

Downloaded from Arrow.com.

●Loose Contact (Applicable Tool : Manual Crimping Tool)

Part No.	HRS No.	Applicable Wire (Tinned, Annealed Copper Wire) (Note)				Finish	Purchase Unit
		UL	Jacket Diameter	Wire Size	Stranded Wire Conductor		
DF1E-2022SC	CL0541-1000-2-00	UL1007	1.8mm	20 AWG	21/0.18	Tin Plating	100pcs per bag
			1.6mm	22 AWG	17/0.16		
DF1E-2022SCA	CL0541-1002-8-00		1.8mm	20 AWG	21/0.18	Gold Plating	
			1.6mm	22 AWG	17/0.16		
DF1B-2022SC	CL0541-0224-4-00		1.8mm	20 AWG	21/0.18	Tin Plating	
			1.6mm	22 AWG	17/0.16		
DF1B-2022SCA	CL0541-0663-4-00		1.8mm	20 AWG	21/0.18	Gold Plating	
			1.6mm	22 AWG	17/0.16		
DF1B-2428SC	CL0541-0679-4-00		1.5mm	24 AWG	11/0.16	Tin Plating	
			1.3mm	26 AWG	7/0.16		
			1.2mm	28 AWG	7/0.127		
DF1B-2428SCA	CL0541-0681-6-00		1.5mm	24 AWG	11/0.16	Gold Plating	
			1.3mm	26 AWG	7/0.16		
			1.2mm	28 AWG	7/0.127		
DF1B-30SC	CL0541-0683-1-00		1.1mm	30 AWG	7/0.1	Tin Plating	
DF1B-30SCA	CL0541-0685-7-00					Gold Plating	

Note : Only the above cables are suitable when using the manual crimping tool.

Jun.1.2025 Copyright 2025 HIROSE ELECTRIC CO., LTD. All Rights Reserved.

Downloaded from Arrow.com.

Crimping Tools

Type	Part No.	(Note 1)	HRS No.	Applicable Contacts
Applicator	AP105-DF1E-2022S		CL0901-4561-0-00	DF1E-2022SCF DF1E-2022SCFA
	AP105-DF1B-2022S	◎	CL0901-4510-9-00	DF1B-2022SCF DF1B-2022SCFA
	AP105-DF1B-2428S	◎	CL0901-4518-0-00	DF1B-2428SCF DF1B-2428SCFA
	AP105-DF1B-30S	◎	CL0901-4517-8-00	DF1B-30SCF DF1B-30SCFA
	AP105-DF1B-2022P	◎	CL0901-4509-0-00	DF1E-2022PCF DF1E-2022PCFA
	AP105-DF1B-2428P	◎	CL0901-4521-5-00	DF1E-2428PCF DF1E-2428PCFA
Main Press Unit	CM-105C	◎	CL0901-0001-0-00	-
Manual Crimping Tool	HT102/DF1E-2022S		CL0550-0277-1-00	DF1E-2022SC DF1E-2022SCA
	DF1B-TA2022SHC	◎	CL0550-0182-7-00	DF1B-2022SC DF1B-2022SCA
	DF1B-TA2428SHC	◎	CL0550-0209-1-00	DF1B-2428SC DF1B-2428SCA
	DF1B-TA30SHC	◎	CL0550-0211-3-00	DF1B-30SC DF1B-30SCA
	HT102/DF1BE-2022P		CL0550-0278-4-00	DF1E-2022PC DF1E-2022PCA
	HT102/DF1BE-2428P		CL0550-0279-7-00	DF1E-2428PC DF1E-2428PCA
Contact Extraction Tool	DF-C-PO(B)		CL0550-0179-2-00	DF1E-2022SC(F)(A) DF1B-####SC(F)(A) DF1E-####PC(F)(A)

Note 1 : Products that use DF1B series tools are marked with " ◎ " after the product number.
Note 2 : The warranty does not cover problems that occur outside of our designated tools.
Note 3 : For crimping work, follow the "Crimping Quality Standards (ETAD-H0947-00, ETAD-H0949-00)" and "Crimping conditions table."
Note 4 : If you do not use our designated tools, please contact our sales representative for consultation about providing tooth profile drawings.

Jun.1.2025 Copyright 2025 HIROSE ELECTRIC CO., LTD. All Rights Reserved.

Downloaded from Arrow.com.

Crimping

Items required prior to start crimping

The work-related documents shown below are required before starting the harness assembly.
(The ● mark represents required documents.)
Please contact your Hirose sales representative if you do not have these documents.

Document Title	Description	Automatic Crimping Machine	Hand Crimping Tool	Remarks
(1) Crimping Machine Main Unit Instruction Manual	Explanation of main press machine unit	●	–	Bundled with purchase of main press machine unit.
(2) Applicator Spare Parts Identification	Explanation for Applicator installation	●	–	Bundled with purchase of applicator.
(3) Crimp Conditions	Standard Crimp Height and Tensile Strength Values	●	–	
(4) Crimp Quality Standards	Various standards for crimping conditions	●	–	
(5) Operating Instructions for Hand Tool	Crimp height, Standard values of tensile strength and others	–	●	Bundled with purchase of hand tool.
(6) Harness Procedure Manual	Harness Procedure	●	●	Ask a Hirose sales personnel to provide them.

Tools

When crimping work is applied to our contacts, use the tools designated by Hirose.
*Crimping performed with tools other than those designated should be avoided as it may result in contact failure, disconnection of cable, etc.
*The operating instructions manual is available for the crimping machine and the applicator.
Be sure to carefully read the operating instructions manual before beginning work.

Applicable Cables

Check that the cables to be used are within the applicable range.
If you intend to use a cable other than those recommended, contact a sales representative.

[Precautions]
・Cables applicable to crimping connectors are tin-plated stranded soft-copper wire.
・Avoid crimping solid wire, wires with polyester threads or tin coated wires.
・Avoid crimping two cables together.
・The crimp height setting values (Note) may vary between tin-plated and gold-plated terminals even if the same electric wires are used.
・The crimp height setting values (Note) may vary depending on the difference in the core wire configuration even if the computed cross-sectional area is the same.

Note : The crimp height is an important item that determines crimping quality.
We execute crimping tests for each electric wire to ensure the optimal value for the crimp height with high precision, thereby ensuring optimal setup values.

Jun.1.2025 Copyright 2025 HIROSE ELECTRIC CO., LTD. All Rights Reserved.

Downloaded from Arrow.com.

Precautions

1. Cleaning Conditions	Please refer to the "Wire-to-Board Connector Guide".
2. Connection Conditions	Please refer to the "Wire-to-Board Connector Guide".
3. Cautions	■ To remove the connector, if the connector is forcedly removed, it will cause connector damage. If the connector is hardly removed, slightly push the connector once, and then remove it using the lock. ■ In some method for laying the cable within equipment, a tension may be applied to the cable so as to remove the contact. In this case, it is recommended to use the retainer. ■ Incomplete insertion of the contact can be prevented by mounting a retainer; however, mounting of a retainer might not be possible when the contact protrudes beyond the socket. Insert the contact securely and then mount the retainer. ■ The color phase of this product may be slightly different from that of the forming product according to the manufacturing lot and future storage conditions, however the difference doesn't affect the performance. ■ Black spots may appear on the mold resin but this does not affect the product quality.
4. Precautions	Please refer to the following documents when handling the product. · Crimp Quality Standard (ETAD-H0947-00, ETAD-H0949-00) · "Wire-to-Board Connector Guide"

Jun.1.2025 Copyright 2025 HIROSE ELECTRIC CO., LTD. All Rights Reserved.

While Taking into Consideration

Specifications mentioned in this catalog are reference values.
When considering to order or use this product, please review the Drawing and Product Specifications sheets.
Use an appropriate cable when using the connector in combination with cables.
If considering usage of a non- specified cable, please contact your sales representative.
If assembly process is done by jigs & tools which are not identified by Hirose, the warranty of the product may be affected.
If considering usage for below mentioned applications, please contact your sales representative.
In cases where the application will demand a high level of reliability, such as automotive, medical instruments, public infrastructure, aerospace/ defense etc. Hirose must review before assurance of reliability can be given.

HIROSE ELECTRIC CO.,LTD. 2-6-3,Nakagawa Chuoh,Tsuzuki-Ku,Yokohama-Shi 224-8540,JAPAN
https://www.hirose.com

※The contents of this catalog are current as of date of 6/2024. Contents are subject to change without notice for the purpose of improvements.
※The HRS logo and "HIROSE" are trademarks of HIROSE ELECTRIC CO., LTD.

Downloaded from Arrow.com.