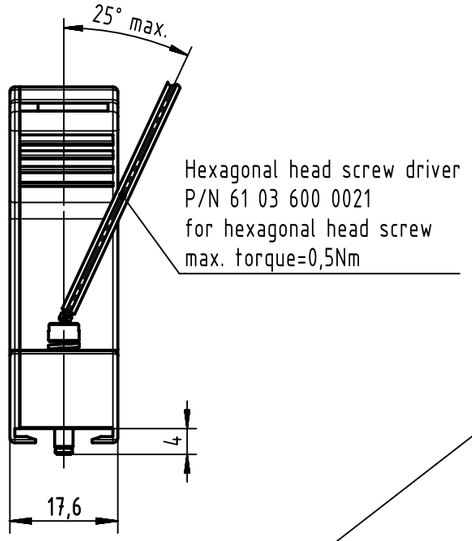

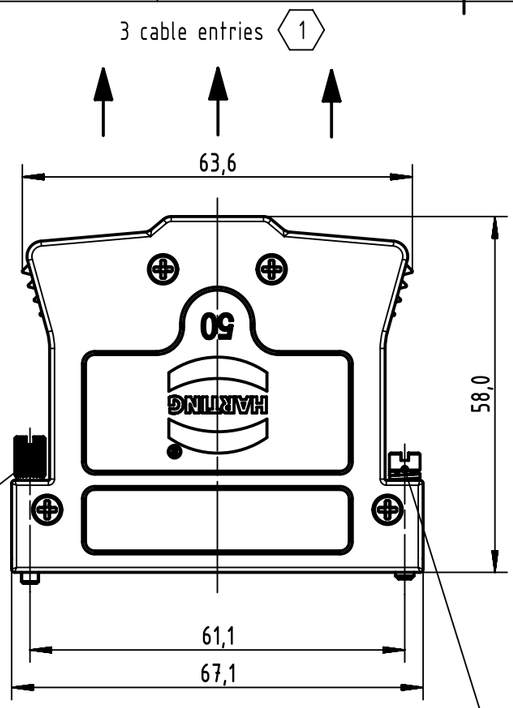

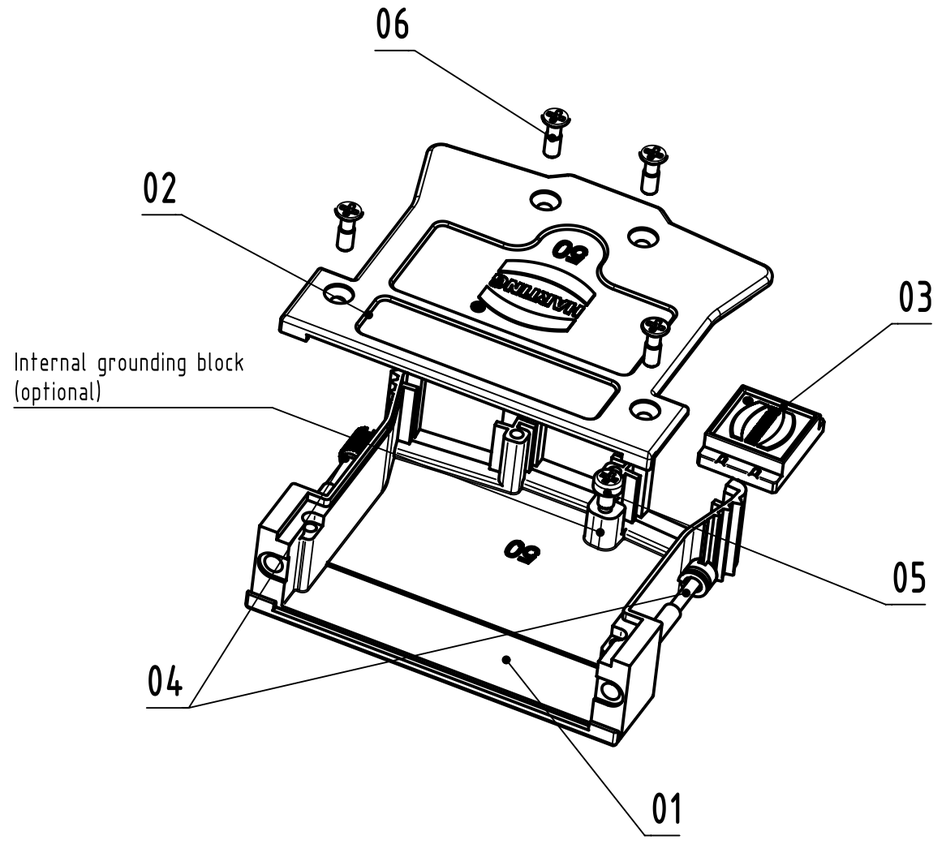

1 For strain relief an additional InduCom cable clamp or a crimp flange and ferrule combination depending on the cable is necessary

X=3	X=0
M3 x 16,8	4-40 UNC x 16,8

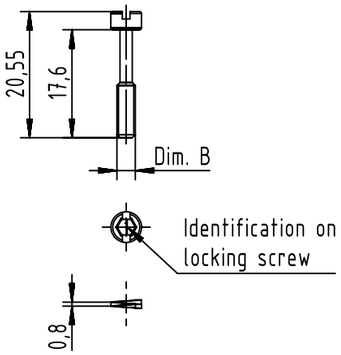

X=1	X=2
M3 x 17,6	4-40 UNC x 17,6

Content InduCom hood			Spare parts (MOQ100)	
Pos.	Quantity	Description	Part Number	Quantity
01	1	metal hood		
02	1	metal cover		
03	2	blank piece (not assembled)	6103 000 0041	1
04	2	locking screw (assembled):		
		either knurled thumb screws 4-40 UNC (for 0119)	0967 002 9018	1
		or hexagonal M3 with captive washer (for 1119)	0967 002 9019	1
		or hexagonal 4-40 UNC with captive washer (for 2119)	0967 002 9020	1
		or knurled thumb screws M3 (for 3119)	0967 002 9017	1
05	1	grounding screw (not assembled) for version with internal grounding block	0963 002 0007	1
06	4	cover screw M2,5 with philips head (not losable in cover) max. torque=0,3Nm	0963 002 0006	1

6103 001 X119 YYY				
6103 001 0119	4-40 UNC	Knurled thumb screw	Without ring	With internal grounding block
6103 001 1119	M3	Hexagonal screw with captive washer	1	
6103 001 2119	4-40 UNC	Hexagonal screw with captive washer	3	
6103 001 3119	M3	Knurled thumb screw	With ring	
6103 001 0119 010	4-40 UNC	Knurled thumb screw	Without ring	Without internal grounding block
6103 001 1119 010	M3	Hexagonal screw with captive washer	1	
6103 001 2119 010	4-40 UNC	Hexagonal screw with captive washer	3	
6103 001 3119 010	M3	Knurled thumb screw	With ring	
Part Number	Dim. B screw size	Screw type	Identification for locking screw	Internal grounding block

All Dimensions in mm
Original Size DIN A3

Scale 1:1 | Free size tol. | Ref. | Sub.

All rights reserved

Department EC PD - CN

HARTING Electronics GmbH
D-32339 Espelkamp

Created by	Inspected by	Standardisation	Date	State
ZENGD	LUOK	HOFFMANN	2018-03-08	Final Release

Title: InduCom size 5 (50-pole) easy access hood assembly

Doc-Key / ECM-Nr.: 100522751/UGD/000/E 500000132046

Type: TB | Number: 6103001X119 | Rev.: E | Page: 1/1

A3

Downloaded from Arrow.com.