CUI Devices is now Same Sky! Learn More

SERIES: AMT25 | DESCRIPTION: MODULAR ABSOLUTE ENCODER

FEATURES

- proprietary capacitive ASIC technology
- low power consumption
- full duplex Serial Peripheral Interface (SPI)
- 12 or 14-bit absolute position with multi-turn capability
- checksum bits for error detection
- configuration and firmware updates via AMT Viewpoint™ software
- digitally settable zero position (single-turn versions only)
- compact modular package with locking hub for ease of installation
- radial and axial cable connections
- -40 ~ 105°C operating temperature

ELECTRICAL

parameter	conditions/description	min	typ	max	units
power supply	VDD	3.8	5	5.5	V
start-up time[1]			200		ms
current consumption	with unloaded output		16		mA
input low level				0.8	V
input high level		2.0		5.5	V
output low level				0.8	V
output high level			3.3		V

Note: 1. Encoder must be stationary during start-up.

ABSOLUTE POSITION CHARACTERISTICS

parameter	conditions/description	min	typ	max	units
resolution	12 or 14-bit				
accuracy			0.2		degrees
absolute zero position	settable via AMT Viewpoint™ GUI or SPI (single-turn versions only)				
multi-turn	multi-turn and single-turn versions available				
turns counter[2]	signed binary number		14		bits
absolute position update rate	12-bit 14-bit		25 100		µs µs

Notes: 2. Multi-turn encoders only.

MECHANICAL

parameter	conditions/description	min	typ	max	units
motor shaft length		13.5			mm
motor shaft tolerance			NOM +0/-0.015		mm
weight			26		g
axial play				±0.3	mm
hub set screw to shaft torque	set screw size: M2.5x0.45		3		in-lb
rotational speed at each resolution	12-bit position resolution 14-bit position resolution			8,000 4,000	RPM RPM

Downloaded from Arrow.com.

ENVIRONMENTAL

parameter	conditions/description	min	typ	max	units
operating temperature		-40		105	°C
humidity	non-condensing			85	%
vibration	10~500 Hz, 5 minute sweep, 2 hours on each XYZ			5	G
shock	3 pulses, 6 ms, 3 on each XYZ			200	G
RoHS	yes				
REACH	EC 1907/2006				

SERIAL INTERFACE

parameter	conditions/description	min	typ	max	units
protocol	Serial Peripheral Interface Mode 0				
frame size			8		bit
data rate				2	MHz
transceiver	SPI driven by PIC18F14K22[3]				
T_{CLK}	data shifted to output buffer[4]	2.5			µs
T_B	time between bytes	2.5			µs
T_{CS}	time between reads	40			µs
T_R	time before CS can be released	3			µs

Notes: 3. See Microchip documentation for more details.
4. This is the time it takes to load the most current position into the SPI buffer which prevents multiple read/response commands from being required.

Figure 1
Timing Waveform

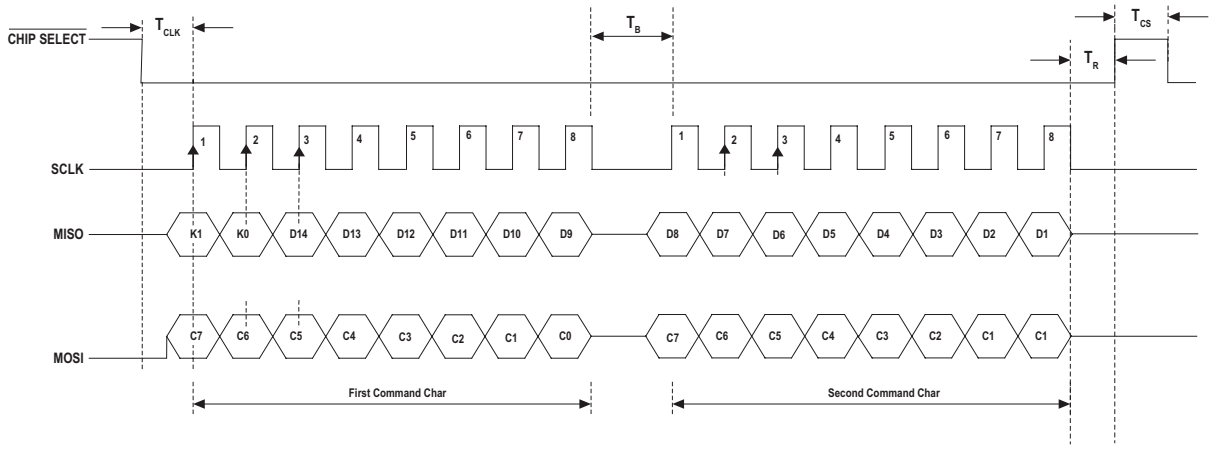

Values K1 and K0 in the response are checkbits. The checkbits are odd parity over the odd and even bits in the position response shown in the equation below. The checkbits are not part of the position, but are used to verify its validity. The lower 14 bits are the encoder position.

Example:
Full response: 0x61AB
14-bit position: 0x21AB (8619 decimal)

Checkbit Formula

Odd: K1 = !(H5^H3^H1^L7^L5^L3^L1)

Even: K0 = !(H4^H2^H0^L6^L4^L2^L0)

From the above response 0x61AB:
Odd: 0 = !(1^0^0^1^1^1^1) = correct
Even: 1 = !(0^0^1^0^0^0^1) = correct

For 12-bit applications L0 and L1 are always 0. Because the low two bits are 0, 12-bit data will need right-shifted two bits. The checkbit calculation remains the same and unaffected.

Downloaded from Arrow.com.

SERIAL INTERFACE (CONTINUED)

Commands:

Read Position
Hex command sequence: 0x00 0x00

The command to read position is 0x00, 0x00 because the encoder will always respond with the current position when SPI is accessed. The encoder observes the second byte for extended commands.

Extended Commands:

Reset Encoder
Hex command sequence: 0x00 0x60

The encoder responds with the current position over the transmission then immediately resets. Observe the power on time when using this command. Encoder must be stationary to power back on.

Set Zero Point (single-turn encoders only)
Hex command sequence: 0x00 0x70

The encoder responds with the current position over this transmission then saves the current position into memory and performs a reset. Encoder must be stationary for this command. Observe the power on time when using this command.

Read Turns (multi-turn encoders only)
Hex command sequence: 0x00 0xA0 0x00 0x00
The encoder responds with position during the transfer of the first two bytes. The encoder responds with the current turn value in the second two bytes. The resulting number is a signed 14 bit number. This value is not retained between power cycles. After a power cycle, the value is reset to zero.

Chip select must be held low for the entire four byte transfer, and T_B should be observed between each byte.

Downloaded from Arrow.com.

PART NUMBER KEY

For customers that prefer a specific AMT25 configuration, please reference the custom configuration key below.

AMT25 X X - XXXX - X

Base Number

Orientation:
2 = Radial
3 = Axial

Absolute Resolution:
A = 12-bit single-turn
B = 14-bit single-turn
C = 12-bit multi-turn
D = 14-bit multi-turn

Bore Diameter:
9000 = 9 mm
9525 = 3/8"
1000 = 10 mm
1100 = 11 mm
1200 = 12 mm
1270 = 1/2"
1300 = 13 mm
1400 = 14 mm
1500* = 15 mm
1587 = 5/8"

Mounting Base:
S = Standard
W** = Wide

*15 mm bore diameter option only available as custom configuration.
**Wide base not included in kits.

AMT25-V KITS

In order to provide maximum flexibility for our customers, the AMT25 series is provided in kit form standard. This allows the user to implement the encoder into a range of applications using one sku#, reducing engineering and inventory costs. AMT25 kit includes all items shown below.

ORDERING GUIDE

AMT25XX-V

Orientation:
2 = Radial
3 = Axial

Absolute Resolution:
A = 12-bit single-turn
B = 14-bit single-turn
C = 12-bit multi-turn
D = 14-bit multi-turn

SHAFT ADAPTERS							
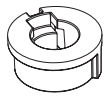	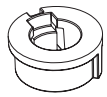	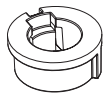	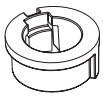	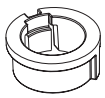	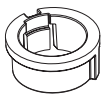	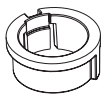	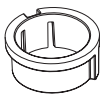
9 mm	3/8 in	10 mm	11 mm	12 mm	1/2 in	13 mm	14 mm
Light Blue	Orange	Purple	Gray	Yellow	Green	Red	Blue

AMT25	ALIGNMENT TOOL*	PLACEMENT TOOL	ALLEN WRENCH
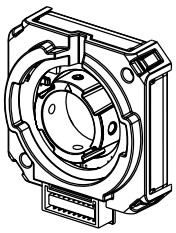 Shaft adapter is not needed for 5/8" shaft	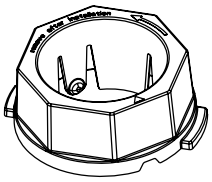	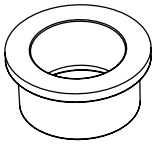	

*Alignment Tool comes pre-installed on all AMT25 Series.

Downloaded from Arrow.com.

ENCODER INTERFACE

CONNECTOR PINOUT	
#	**Function**
1[1]	NC
2[1]	NC
3	CS
4	SCLK
5[1]	MOSI
6[1]	MISO
7	GND
8	+5 V

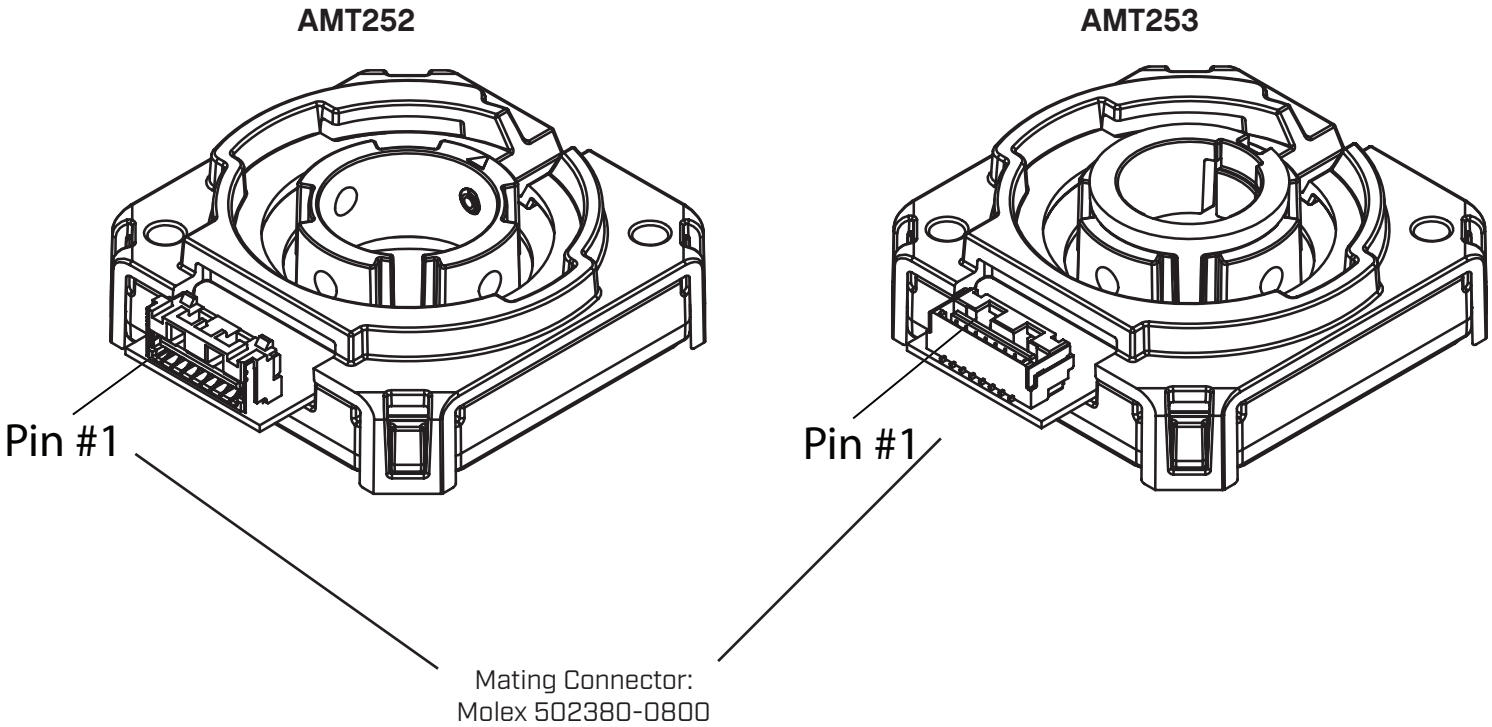

Notes:
1. Pins 1, 2 are used for configuration only and should be left disconnected for SPI.
2. Compatible with prototype cable AMT-08C-3-036 and programming cable AMT-PGRM-08C-3.

Downloaded from Arrow.com.

MECHANICAL DRAWING

units: mm
tolerance:
X.XX ±0.25 mm
hole dia: ±0.08 mm

AMT252

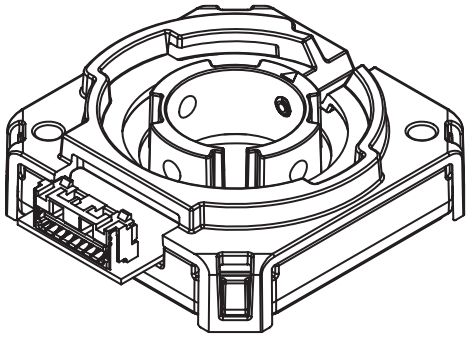

AMT253

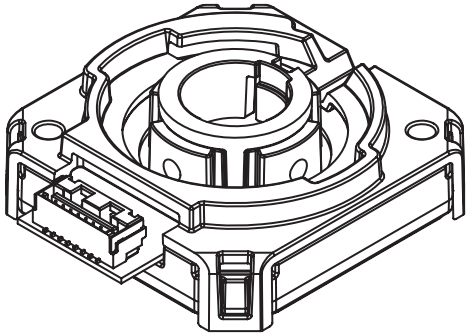

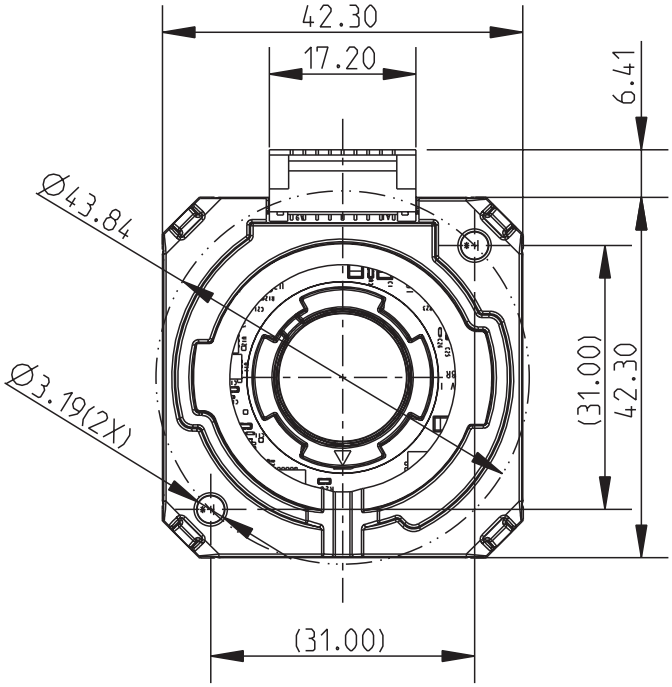

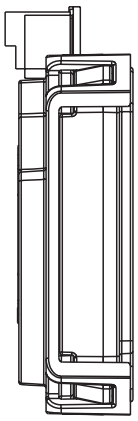

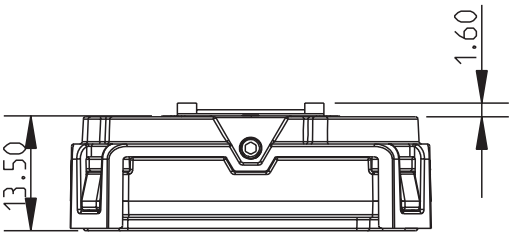

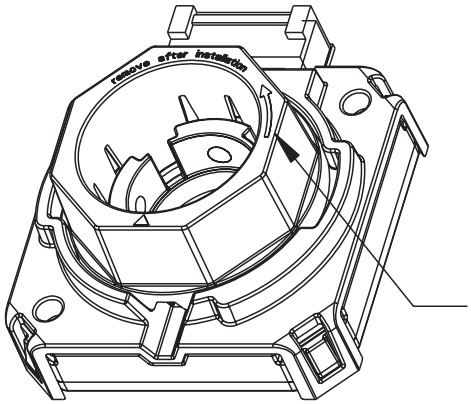

Downloaded from Arrow.com.

MECHANICAL DRAWING (WIDE BASE)

units: mm
tolerance:
X.XX ±0.25 mm
hole dia: ±0.08 mm

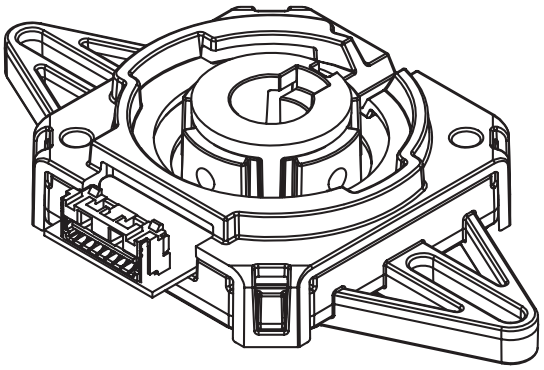

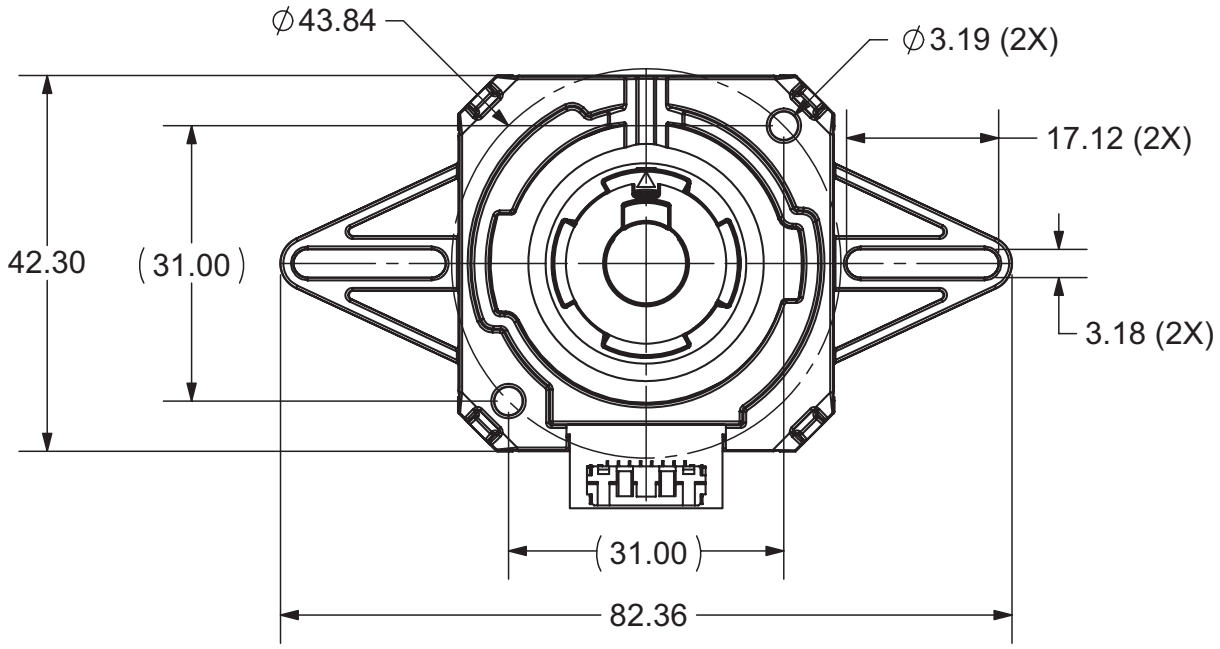

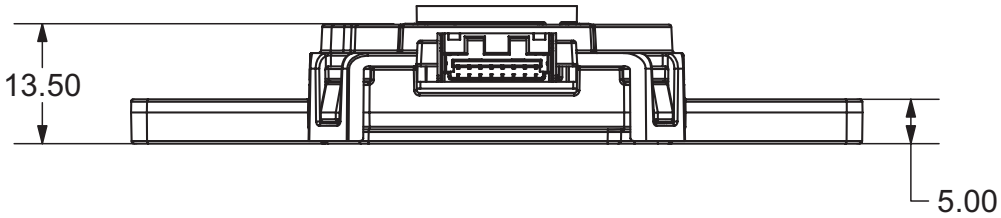

Downloaded from Arrow.com.

ASSEMBLY PROCEDURE

STEP 1

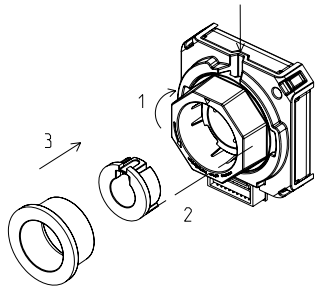

1. Begin by rotating the pre-installed alignment tool clockwise and completely to the right so that the pre-installed shaft set screw is visible.
2. Select the appropriately sized shaft adapter and insert it into the encoder making sure the adapter is properly aligned with the keyway in the metal hub. No adapter is needed for a 5/8" motor shaft.
3. Select the placement tool and insert it into the encoder. This placement tool holds the encoder's hub and shaft adapter in the proper position for installation onto the motor shaft.

STEP 2

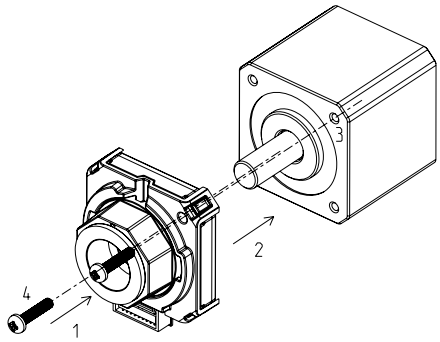

1. Slide the encoder onto the motor shaft applying force only to the placement tool to maintain proper alignment of the encoder's hub and shaft adapter.
2. Press until the encoder sits flush with the motor body.
3. Once in contact with the motor body, rotate the encoder until the mounting holes are aligned with the proper bolt circle.
4. Insert screws and fasten the encoder to the motor.

STEP 3

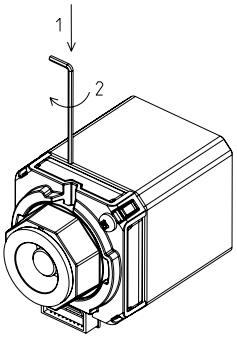

1. Insert the Allen Wrench into the notch on the top.
2. Tighten the shaft set screw to the recommended torque settings per the spec.

STEP 4

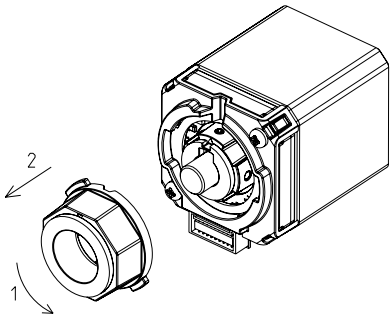

1. Rotate the placement tool and alignment tool counterclockwise until the tabs align with the openings.
2. Remove both tools from the encoder.
3. When installation is finished, the motor shaft should be rotating freely.

Downloaded from Arrow.com.

REVISION HISTORY

rev.	description	date
1.0	initial release	01/16/2025
1.01	updated datasheet	06/30/2025
1.02	updated features	06/23/2026

The revision history provided is for informational purposes only and is believed to be accurate.

Same Sky offers a one (1) year limited warranty. Complete warranty information is listed on our website.

Same Sky reserves the right to make changes to the product at any time without notice. Information provided by Same Sky is believed to be accurate and reliable. However, no responsibility is assumed by Same Sky for its use, nor for any infringements of patents or other rights of third parties which may result from its use.

Same Sky products are not authorized or warranted for use as critical components in equipment that requires an extremely high level of reliability. A critical component is any component of a life support device or system whose failure to perform can be reasonably expected to cause the failure of the life support device or system, or to affect its safety or effectiveness.

Downloaded from Arrow.com.