HS5E Series Miniature Solenoid Locking Switches

HS5E features:

- World's smallest 4 contact solenoid interlock switch. (35 x 40 x 146 mm)
- Four contacts
- Gold-plated contacts
- Spring lock type (unlocks when the solenoid is energized) and solenoid lock type (locks when solenoid is energized) are available
- Flexible installation - the head can rotate, allowing 8 different actuator entries
- Metal actuator entry slot ensures long life
- Actuator locking strength is 1000N minimum (GS-ET-19)
- Integral molded cable reduces wiring time
- LED pilot light indicates the solenoid status
- RoHS Directive Compliant
- Contacts are IP67 (IEC60529)
- NC contacts are direct opening (IEC/EN60947-5-1)
- Only proprietary actuators can be used, preventing unauthorized access (ISO14119, EN1088)
- Double insulation structure - no grounding required

Spring Lock Type

- Automatically locks the actuator without power to the solenoid
- After the machine stops, unlocking is accomplished by energizing the solenoid, providing a high level of safety
- Manual unlocking is possible in the event of power failure or maintenance

Solenoid Lock Type

- The actuator is locked when energized
- The actuator is unlocked when de-energized

EN1088
EN60947-5-1
IEC60947-5-1

GS-ET-15
BG standard
in Germany

Direct Opening Action

Double Insulation

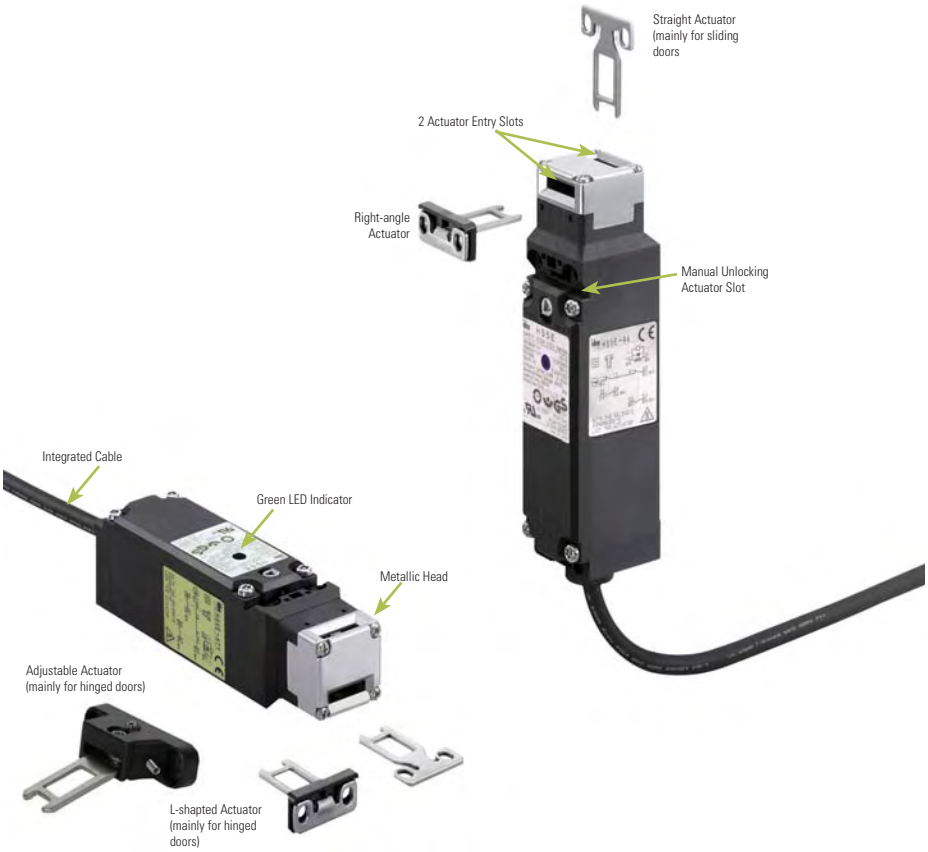

Downloaded from Arrow.com.

Part Numbers

Body

Lock Mechanism	Circuit Number	Contact Arrangement	Pilot Light	Cable Length	Part Number
Spring Lock	A	Main Circuit: 1NC+1NC, Monitor Circuit: 1NO, 1NO Main Circuit: 11 12 41 42 Monitor Circuit: 23 24 Monitor Circuit: 53 54	Without	1 m **3m** 5m	HS5E-A4001 **HS5E-A4003** HS5E-A4005
			With	1 m **3m** 5m	HS5E-A4401-G **HS5E-A4403-G** HS5E-A4405-G
	B	Main Circuit: 1NC+1NC, Monitor Circuit: 1NO, 1NC Main Circuit: 11 12 41 42 Monitor Circuit: 23 24 Monitor Circuit: 51 52	Without	1 m **3m** 5m	HS5E-B4001 **HS5E-B4003** HS5E-B4005
			With	1 m **3m** 5m	HS5E-B4401-G **HS5E-B4403-G** HS5E-B4405-G
	D	Main Circuit: 1NC+1NC, Monitor Circuit: 1NC, 1NC Main Circuit: 11 12 41 42 Monitor Circuit: 21 22 Monitor Circuit: 51 52	Without	1 m **3m** 5m	HS5E-D4001 **HS5E-D4003** HS5E-D4005
			With	1 m **3m** 5m	HS5E-D4401-G **HS5E-D4403-G** HS5E-D4405-G
Solenoid Lock	A	Main Circuit: 1NC+1NC, Monitor Circuit: 1NO, 1NO Main Circuit: 11 12 41 42 Monitor Circuit: 23 24 Monitor Circuit: 53 54	Without	1 m **3m** 5m	HS5E-A7Y001 **HS5E-A7Y003** HS5E-A7Y005
			With	1 m **3m** 5m	HS5E-A7Y401-G **HS5E-A7Y403-G** HS5E-A7Y405-G
	B	Main Circuit: 1NC+1NC, Monitor Circuit: 1NO, 1NC Main Circuit: 11 12 41 42 Monitor Circuit: 23 24 Monitor Circuit: 51 52	Without	1 m **3m** 5m	HS5E-B7Y001 **HS5E-B7Y003** HS5E-B7Y005
			With	1 m **3m** 5m	HS5E-B7Y401-G **HS5E-B7Y403-G** HS5E-B7Y405-G
	D	Main Circuit: 1NC+1NC, Monitor Circuit: 1NC, 1NC Main Circuit: 11 12 41 42 Monitor Circuit: 21 22 Monitor Circuit: 51 52	Without	1 m **3m** 5m	HS5E-D7Y001 **HS5E-D7Y003** HS5E-D7Y005
			With	1 m **3m** 5m	HS5E-D7Y401-G **HS5E-D7Y403-G** HS5E-D7Y405-G

Contact configuration shows the contact status when actuator is inserted and solenoid off for for spring lock or solenoid on for solenoid lock.

Actuator Keys

Item	Part Number	Description
	HS9Z-A51	Straight
	HS9Z-A52	Right-angle
	HS9Z-A55	Horizontal/vertical operation (for hinged doors) (see note below)

The actuator tensile strength is 500N minimum.

Accessories

Appearance	Description	Part Number	Weight
	HS5B/HS5E Plug Actuator (allows switch to be used as interlock plug unit)	HS9Z-A5P	35g
	HS5B/HS5E Padlock Hasp (prevents unauthorized insertion of actuator)	HS9Z-PH5	35g

Part Number	Description
HS9Z-SP51	Mounting Plate
HS9Z-T3	Manual unlock key (long type)

Downloaded from Arrow.com.

Circuit Diagrams

	Status 1	Status 2	Status 3	Status 4	Unlocking Using Manual Unlock Key
Interlock Switch Status	• Door closed • **Machine ready to operate** • Solenoid de-energized	• Door opened • Machine cannot be operated • Solenoid energized	• Door open • Machine cannot be operated • Solenoid energized	• Door open • Machine cannot be operated • Solenoid de-energized	• Door closed • Machine cannot be operated • Solenoid de-energized
Door Status	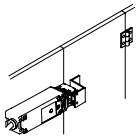		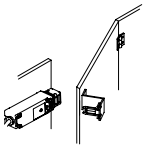		
Circuit Diagram (Example: HS5E-A4)	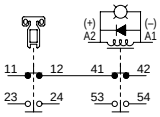	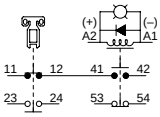	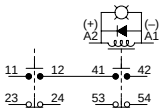		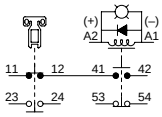

			Status 1	Status 2	Status 3	Status 4	Unlocking Using Manual Unlock Key
Door			**Closed (locked)**	**Closed (unlocked)**	**Open**	**Open**	**Closed (unlocked)**
Spring Lock Type Safety Switch	HS5E-A4 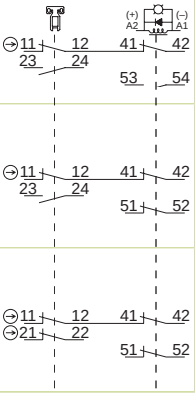	Main Circuit 11-42	ON (closed)	OFF (open)	OFF (open)	OFF (open)	OFF (open)
		Monitor Circuit (door open) 23-24	OFF (open)	OFF (open)	ON (closed)	ON (closed)	OFF (open)
		Monitor Circuit (unlocked) 53-54	OFF (open)	ON (closed)	ON (closed)	ON (closed)	ON (closed)
	HS5E-B4	Main Circuit 11-42	ON (closed)	OFF (open)	OFF (open)	OFF (open)	OFF (open)
		Monitor Circuit (door open) 23-24	OFF (open)	OFF (open)	ON (closed)	ON (closed)	OFF (open)
		Monitor Circuit (unlocked) 51-52	ON (closed)	OFF (open)	OFF (open)	OFF (open)	OFF (open)
	HS5E-D4	Main Circuit 11-42	ON (closed)	OFF (open)	OFF (open)	OFF (open)	OFF (open)
		Monitor Circuit (door open) 21-22	ON (closed)	ON (closed)	OFF (open)	OFF (open)	ON (closed)
		Monitor Circuit (unlocked) 51-52	ON (closed)	OFF (open)	OFF (open)	OFF (open)	OFF (open)
Solenoid Power A1-A2 (all types)			OFF (de-energized)	ON (energized)	ON (energized)	OFF (de-energized)	OFF (de-energized)
Door			**Closed (locked)**	**Closed (unlocked)**	**Open**	**Open**	**Closed (unlocked)**
Solenoid Lock Safety Switch	HS5E-A7Y 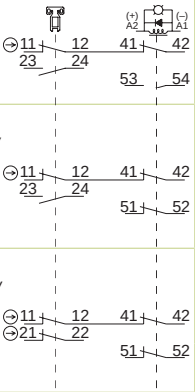	Main Circuit 11-42	ON (closed)	OFF (open)	OFF (open)	OFF (open)	OFF (open)
		Monitor Circuit (door open) 23-24	OFF (open)	OFF (open)	ON (closed)	ON (closed)	OFF (open)
		Monitor Circuit (unlocked) 53-54	OFF (open)	ON (closed)	ON (closed)	ON (closed)	ON (closed)
	HS5E-B7Y	Main Circuit 11-42	ON (closed)	OFF (open)	OFF (open)	OFF (open)	OFF (open)
		Monitor Circuit (door open) 23-24	OFF (open)	OFF (open)	ON (closed)	ON (closed)	OFF (open)
		Monitor Circuit (locked) 51-52	ON (closed)	OFF (open)	OFF (open)	OFF (open)	OFF (open)
	HS5E-D7Y	Main Circuit 11-42	ON (closed)	OFF (open)	OFF (open)	OFF (open)	OFF (open)
		Monitor Circuit (door open) 21-22	ON (closed)	ON (closed)	OFF (open)	OFF (open)	ON (closed)
		Monitor Circuit (locked) 51-52	ON (closed)	OFF (open)	OFF (open)	OFF (open)	OFF (open)
Solenoid Power A1-A2 (all types)			ON (energized)	OFF (de-energized)	OFF (de-energized)	ON (energized) (note 4)	OFF (de-energized) to ON (energized) (see note 3) (see note 4)

1. Main circuit: Connected to the control circuit of machine drive part, sending the interlock signals to the protective door.
2. Monitor circuit: Sends ON/OFF signals of main circuit and monitoring signals of open/closed status of protective door.
3. Do not attempt manual unlock when energized.
4. Do not energize the solenoid for a prolonged period of time when the door is open and when unlocking the door manually.

Operating Characteristics (reference)

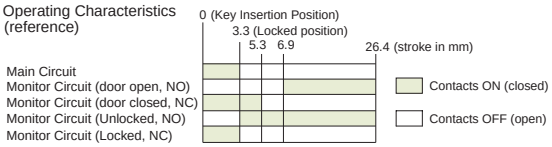

The characteristics shown in the chart above are of the HS9Z-A61, -A62, -A65, and -A66 actuators. For the HS9Z-A62S actuator, subtract 0.6 mm.
The characteristics show the contact status when the actuator enters an entry slot of an interlock switch.

Downloaded from Arrow.com.

Specifications

Conforming Standards	ISO14119, IEC60947-5-1, EN60947-5-1 (TÜV approval), EN1088, GS-ET-19 (BG approval), UL508 (UL recognized), CSA C22.2, No. 14 (c-UL recognized)
Application Standards	IEC60204-1/EN60204-1
Operating Temperature	–25 to 50°C (no freezing)
Relative Humidity	45 to 85% (no condensation)
Storage Temperature	–40 to +80°C (no freezing)
Operating Environment	Degree of pollution: 3
Impulse Withstand Voltage	2.5 kV (between LED, solenoid and grounding: 0.5 kV)
Insulation Resistance (DC megger)	Between live and dead metal parts: 100 MΩ minimum Between live metal part and ground: 100 MΩ minimum Between live metal parts: 100 MΩ minimum Between Terminals of the same pole: 100 MΩ minimum
Electric Shock Protection Class	Class II (IEC61140)
Degree of Protection	IP67 (IEC60529)
Shock Resistance	Operating extremes: 100 m/s^2 (10 G) Damage limits: 1000 m/s^2 (100 G)
Vibration Resistance	Operating extremes: 10 to 55 H, amplitude 0.35 mm minimum Damage limits: 30 Hz, amplitude 1.5 mm minimum
Actuator Operating Speed	0.05 to 1.0 m/s
Positive Opening Travel	Actuator HS9Z-A51: 11 mm minimum Actuator HS9Z-A52/A55: 12 mm minimum
Positive Opening Force	80N minimum
Tensile Strength when Locked	1000 N minimum (GS-ET-19)
Operating Frequency	900 operations per hour
Mechanical Life	1,000,000 operations minimum (GS-ET-19)
Electrical Life	100,000 operations minimum (operating frequency 900 operations per hour, rated load AC-12, 250V, 1A)
Conditional Short-circuit Current	50A (250V) (Note: Use 250V/10A fast acting type fuse for short circuit protection.)
Cable	UL2464, No. 21 AWG (8-core: 0.5 mm^2 or equivalent/core)
Cable Diameter	ø7.6 mm
Weight (approx.)	400 g (HS5E-***01)

Part Number Key

HS5E - A 4 4 01 - G

- **Pilot Light Color**: G (Green)
- **Cable Length**: 01: 1m; 03: 3m; 05: 5m
- **Pilot Light Voltage**: 4: 24V DC; 0: without pilot light
- **Solenoid Unit Voltage/ Lock Mechanism**: 4: 24V DC/Spring Lock; 7Y: 24V DC/Solenoid Lock
- **Circuit Code**

Door Monitor Circuit	Lock Monitor Circuit
A: 1NC + 1NC	1NO + 1NO
B: 1NC + 1NC	1NO + 1NC
D: 1NC + 1NC	1NC + 1NC

Specifications

Locking Mechanism	Spring Lock/Solenoid Lock
Rated Voltage	24V DC
Current	266 mA
Coil Resistance	90Ω (at 20°C)
Operating Voltage	Rated voltage x 85% or less (at 20°C)
Return Voltage	Rated voltage x 10% or more (at 20°C)
Maximum Continuous Applying Voltage	Rated voltage x 110%
Maximum Continuous Applying Time	Continuous
Insulation Class	Class F

Pilot Light

Rated Voltage	24V DC
Current	10 mA
Light Source	LED
Light Color	Green

Current Ratings

Rated Insulation Voltage (Ui) (see note 2)			250V (between LED, solenoid and grounding: 30V)		
Current (Ith)			2.5A		
Rated Voltage (Ue)			30V	125V	250V
Rated Current (Ie) (see note 3)	**AC**	**Resistive load (AC12)**	—	2A	1A
		Inductive Load (AC15)	—	1A	0.5A
	DC	**Resistive load (DC12)**	2A	0.4A	0.2A
		Inductive Load (DC13)	1A	0.22A	0.1A

1. Minimum applicable load (reference value): 3V AC/DC, 5 mA
2. UL rating: 125V
3. TUV, BG rating: AC-15, 0.5A/250V, DC-13, 0.22A/125V
   UL, c-UL rating: Pilot duty AC 0.5A/125V, Pilot duty DC 0.22A/125V

Downloaded from Arrow.com.

Dimensions (mm) and Mounting Hole Layouts

Actuator Keys

HS5E-**4*G (w/pilot light)
Horizontal Mounting/Straight Actuator (HS9Z-A51)

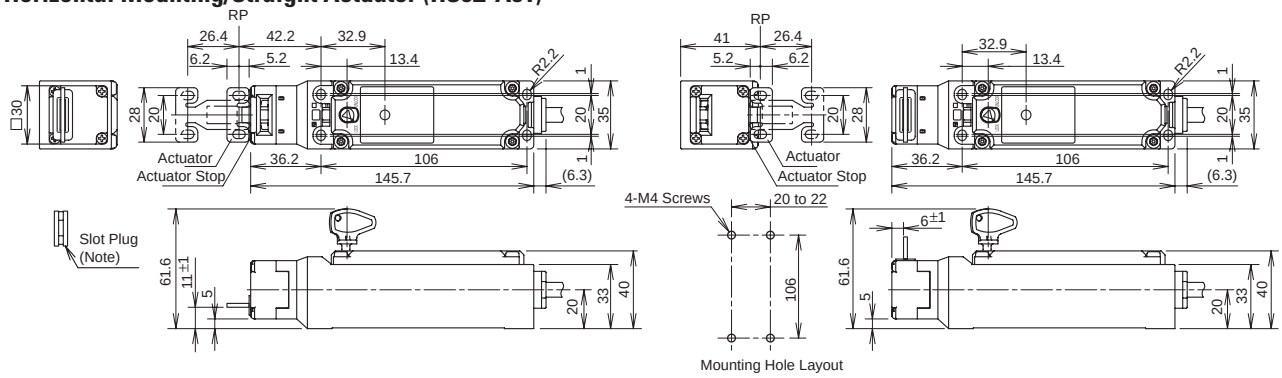

Vertical Mounting/Right-angle Actuator (HS9Z-A52)

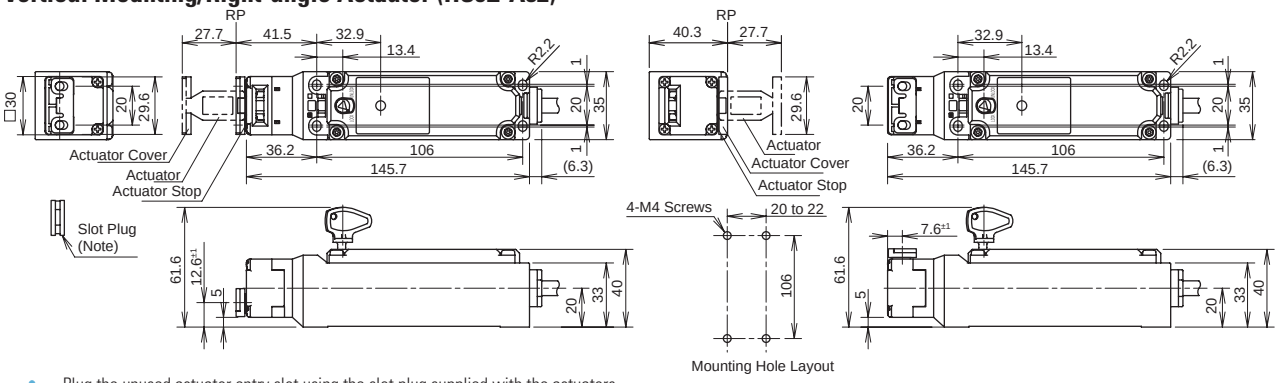

Plug the unused actuator entry slot using the slot plug supplied with the actuators.

Actuator Key Mounting Reference Position

As shown in the figure on the right, the mounting reference position of the actuator when inserted in the safety switch is:

HS9Z-A51: The actuator lightly touches the actuator stop placed on the safety switch.

HS9Z-A52: The actuator cover lightly touches the actuator stop placed on the safety switch.

After mounting the actuator, remove the actuator stop from the safety switch.

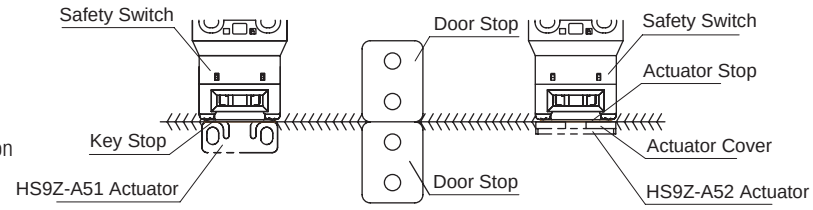

Straight (HS9Z-A51)

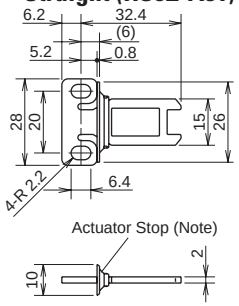

Right-angle type (HS9Z-A52)

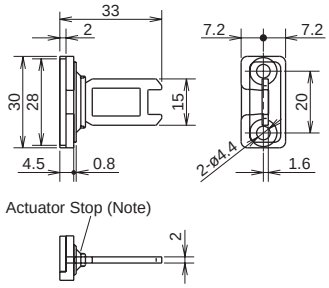

• Actuator Mounting Hole Layout (Straight, L-shaped)

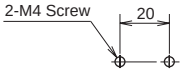

Downloaded from Arrow.com.

Dimensions and Mounting Hole Layouts, continued

Vertically/Horizontally Movable Actuator (HS9Z-A55)

Horizontal Swing

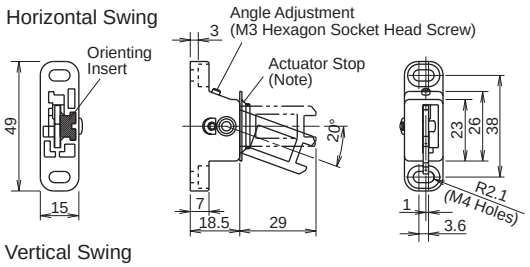

Vertical Swing

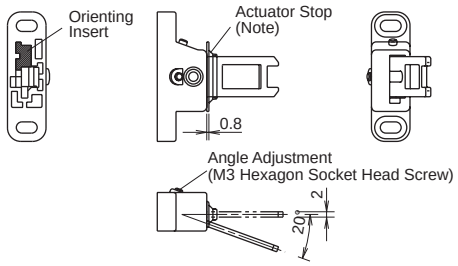

Actuator Orientation

The orientation of the actuator operation (horizontal/vertical) can be changed with the orientation part (white plastic part) installed on the back of the actuator.

Do not loose the orientation part, otherwise the actuator will not operate properly.

The actuator stop film and actuator stop are used when adjusting the actuator position, and must be removed after adjustment.

- Actuator Mounting Hole Layout (horizontal/vertical swing)

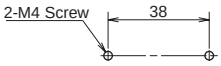

Accessory Dimensions (mm)

Actuator Type	Part Number
Mounting Plate	HS9Z-SP51
Manual Unlocking Key (long)	HS9Z-T3

- Manual Unlocking Key (plastic, supplied with the switch, non-replaceable)

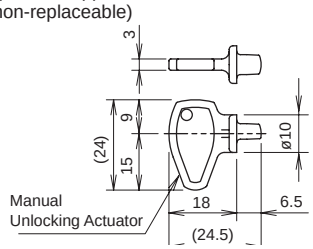

- HS9Z-T3 Manual Unlocking Key (metal, long-shaped)

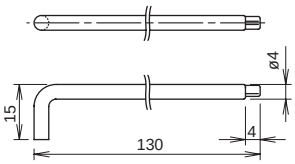

- Mounting Plate (HS9Z-SP51)

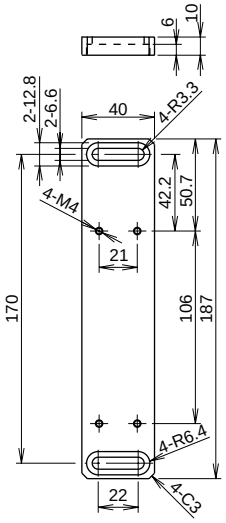

Material: Anonized A6063
Weight: approx. 180 g

HS9Z-A5P

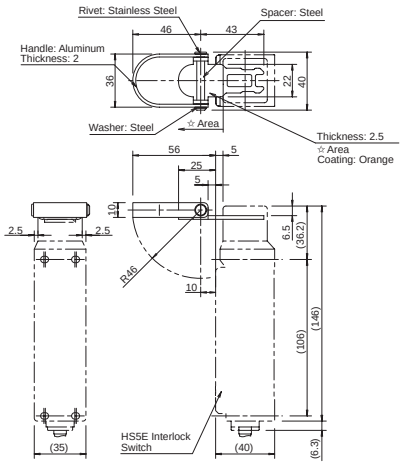

HS9Z-PH5

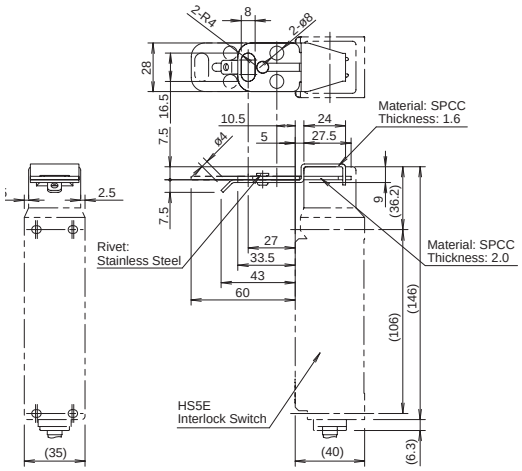

Downloaded from Arrow.com.

Operating Instructions

Minimum Radius of Hinged Door

- When using the safety switch for a hinged door, refer to the minimum radius of doors as shown below. For doors with small minimum radius, use adjustable actuators (HS9Z-A55).

Because deviation or dislocation of a hinged door may occur, make sure of correct operation of the actual application before installation.

HS9Z-A52 Actuator

(When the center of the hinged door is on the extension line of the actuator mounting surface.)

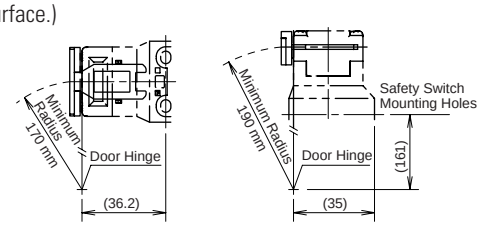

(When the center of the hinged door is on the extension line of the contact surface of actuator and safety switch.

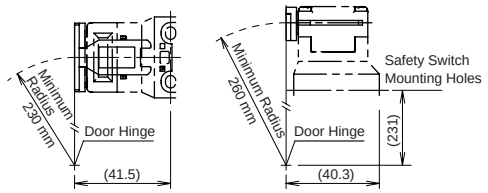

Changing the Orientation of the Head

- The head of the HS5E can be mounted in four ways by removing the four screws from the corners of the HS5E head and reinstalling the head in the desired orientation. Before wiring the HS5E, replace the head. Before replacing the head, turn the manual unlock part to the UNLOCK position using the manual unlock key. When reinstalling the head, make sure that no foreign objects enter the safety switch. Tighten the screws, without leaving space between the head and body, otherwise the safety switch may malfunction.
- Recommended tightening torque: 1.0 ±0.1 N·m

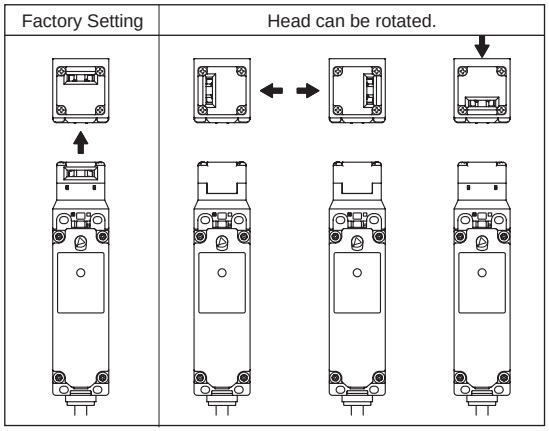

Actuator Angle Adjustment

- Using the angle adjustment screw, the actuator angle can be adjusted (refer to the dimensional drawing).
  Adjustable angle: 0 to 20°
- The larger the adjusted angle of the actuator, the smaller the applicable radius of the door opening.
- After installing the actuator, open the door. Then adjust the actuator so that its edge can be inserted properly into the entry slot of the safety switch.
- After adjusting the actuator angle, apply loctite to the adjustment screw so that the screw will not loosen.

When using the HS9Z-A55 horizontally-movable actuator

- When the center of the hinged door is on the extension line of the contact surface of actuator and safety switch: 50 mm
- When the center of the hinged door is on the extension line of the actuator mounting surface: 70 mm

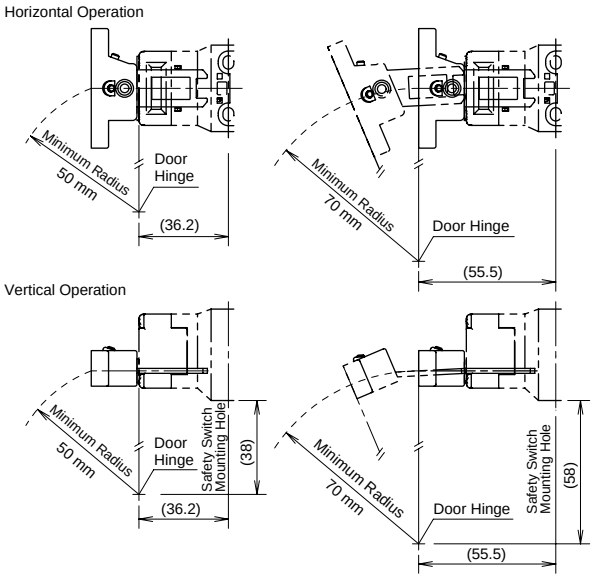

Mounting Examples

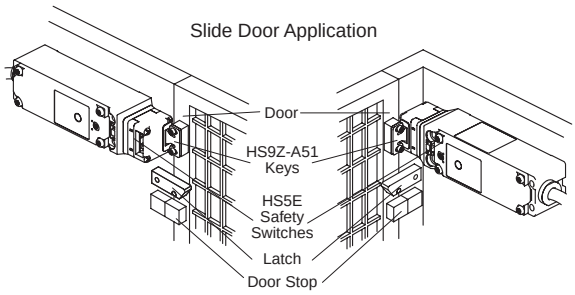

Safety Precautions

- Before manually unlocking the safety switch, make sure the machine has come to a complete stop. Manual unlocking during operation may unlock the switch before the machine stops, and the protection of the safety switch with solenoid is lost. While the solenoid is energized, do not unlock the actuator manually (solenoid lock type).

Downloaded from Arrow.com.

Instructions, continued

For Manual Unlocking

- **Spring lock type**
  The HS5E allows manual unlocking of the actuator to pre-check proper door operation before wiring or turning power on, as well as for an emergency or a power failure.
- **Solenoid lock type**
  If the actuator is not unlocked although the solenoid is de-energized, the actuator can be unlocked manually.

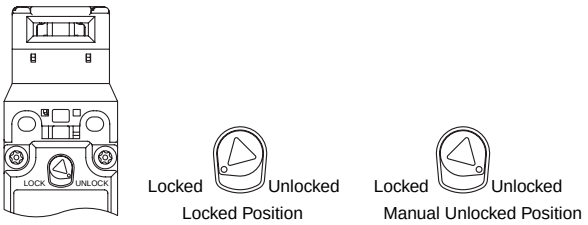

- To change from the locked to the manual unlocked position as shown above, turn the actuator fully 90° using the proprietary actuator supplied with the switch.
- Using the safety switch with the actuator not fully turned (less than 90°) may cause damage to the switch or errors (when manually unlocked, the switch will keep the main circuit disconnected and the door unlocked).
- Do not apply excessive force (0.45 N·m or more) to the manual unlock part, otherwise the manual unlock part will be damaged. Do not leave the manual unlock key attached to the switch during operation. This is dangerous because the switch can be unlocked while the machine is in operation.

Manual Unlocking Key (supplied with the switch)

Recommended Tightening Torque of Mounting Screws

- Safety Switch: 2.0 ± 0.2 N·m (two M4 screws)
- Actuators
  HS9Z-A51: 2.0 ± 0.2 N·m (two M4 screws)
  HS9Z-A52: 1.0 ± 0.2 N·m (two M4 Phillips screws)
  HS9Z-A55: 1.0 ± 1.5 N·m (two M4 screws)
- The above recommended tightening torques of the mounting screws are the values confirmed with hex socket head bolts. When other screws are used and tightened to a smaller torque, make sure that the screws do not become loose after mounting.
- Mounting bolts must be provided by the users.
- To avoid unauthorized or unintended removal of safety switch and the actuator, it is recommended that the safety switch and the actuator are installed in an unremovable manner, for example using special screws or welding the screws.

Cables

- Do not fasten or loosen the gland at the bottom of the safety switch.
- When bending the cable during wiring, make sure that the cable radius is kept at least 30mm.
- When wiring, make sure that water or oil does not enter the cable.
- Do not open the lid of the safety switch. Otherwise the switch may become damaged.
- Solenoid has polarity. Observe the correct polarity when wiring.

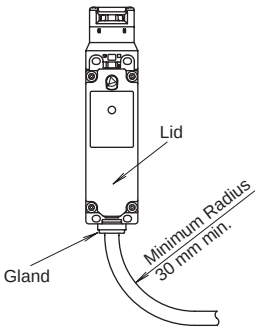

Wire Identification

- Wires can be identified by the color and white line printed on the wire.

No.	Insulator Color	No	Insulator Color
1	white	5	brown/white
2	black	6	orange
3	brown	7	blue/white
4	blue	8	orange/white

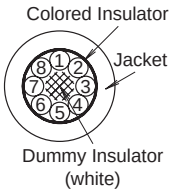

Terminal Number Identification

- When wiring, identify the terminal number of each contact with the color of insulator.
- The following table shows the identification of terminal numbers.
- When wiring, cut unnecessary wires such as dummy insulator (white) and/or unused wires to avoid incorrect wiring.

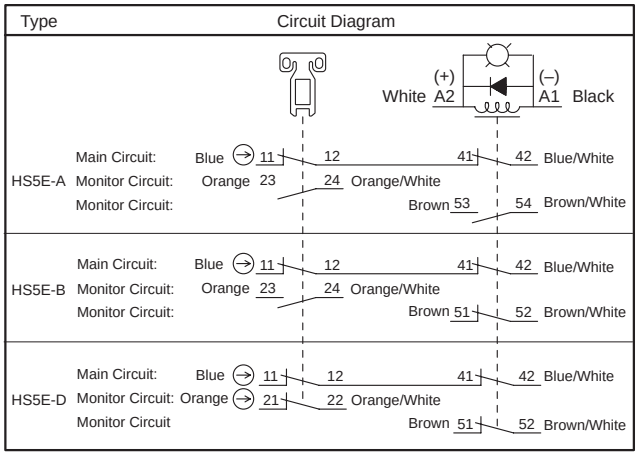

Downloaded from Arrow.com.

Safety Precautions

- In order to avoid electric shock or a fire, turn the power off before installation, removal, wire connection, maintenance, or inspection of the switch.
- If relays are used in the circuit between the safety switch and the load, consider degrees of the danger and use safety relays, since welded or sticking contacts of standard relays may invalidate the functions of the safety switch.
- Do not place a PLC in the circuit between the safety switch and the load. The safety security can be endangered in the event of a malfunction of the PLC.
- Do not disassemble or modify the switch. It may cause a breakdown or an accident.

Operation Precautions - for all series

- Regardless of door types, do not use the safety switch as a door stop. Install a mechanical door stop at the end of the door to protect the safety switch against excessive force.
- Do not apply excessive shock to the switch when opening or closing the door.
- A shock to the door exceeding 1,000 m/sec^2 (approx. 100G) may cause the contacts of the switch to chatter, and a malfunction of the switch may occur.
- For connection of wires, unscrew the cover. Unnecessary loosening of other screws may cause a malfunction of the switch.
- Prevent foreign objects such as dust and liquids from entering the switch while connecting conduit or wiring.
- If the operating atmosphere is contaminated, use a protective cover to prevent the entry of foreign objects into the switch through the actuator entry slots.
- Entry of a considerable amount of foreign objects into the switch may affect the mechanism of the switch and cause a breakdown.
- Do not store the switches in a dusty, humid, or organic-gas atmosphere.

HS5E/HS5B Precautions

For Rotating Head Directions

- The heads of the HS5E/HS5B can be rotated in 90° increments after removing the 4 screws on the corners of the head. Prevent entry of foreign objects into the switch during removal of the head. Tighten these screws with torque designated in the instruction sheet. Improper torque may cause errors.

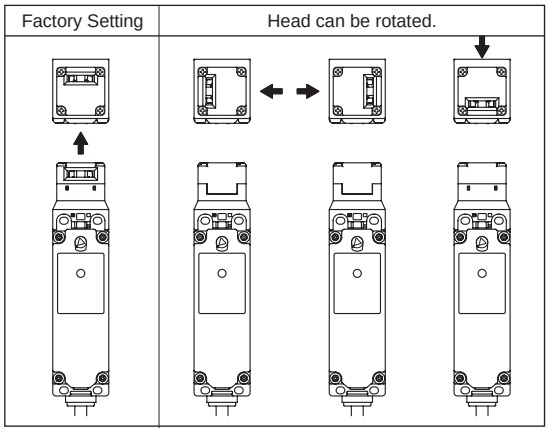

Minimum Radius of Hinged Doors

- When using the interlock switch on hinged doors, refer to the minimum radius of doors shown below. When using on doors with small minimum radius, use the angle adjustable actuator (HS9Z-A55).

Note: Because deviation or dislocation of hinged doors may occur in actual applications, make sure of the correct operation before installation.

When using the HS9Z-A52 Actuator

- When the door hinge is on the extension line of the interlock switch surface:

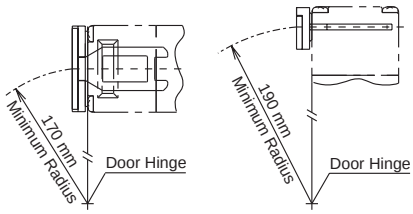

- When door hinge is on the extension line of the actuator mounting surface:

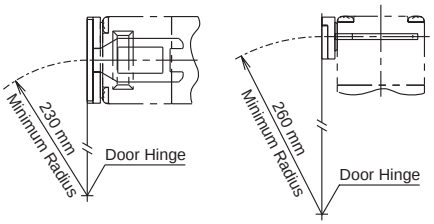

HS2B Precautions

Wire Connection

- The HS2B has 3 conduit ports, which are closed as a part of the molded switch housing.
- Make an opening for wire connection by breaking one of the conduit-port knockouts on the switch housing using a screwdriver.
- When breaking the conduit port, take care not to damage the contact block or other parts inside the switch.
- Cracks or burrs on the conduit entry may deteriorate the housing protection against water.
- When changing to another conduit port, close the unused opening with an optional plug (Part No. HS9Z-P1).

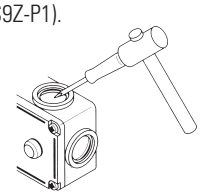

Downloaded from Arrow.com.

HS1E Precautions

Wire Connection

- Make an opening for wire connection by breaking one of the conduit-port knockouts on the switch housing using a screwdriver.
- Before breaking the knockout, temporarily remove the connector-fixing lock nut from the switch.
- When breaking the knockout, take care not to damage the contact block or other parts inside the switch.
- Cracks or burrs on the conduit entry may deteriorate the housing protection.
- When changing to the other conduit port, close the unused opening with an optional plug (accessory).

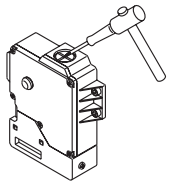

Plug
Type No. HS9Z-P1

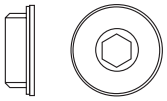

Manual Unlocking

- Remove the screw located on the unlocking entry at the side of the switch using the key wrench included with the switch. Then insert a small screwdriver into the switch to push the lever inside of the switch toward the indicator until the actuator is unlocked (refer to the diagram on the right).
- Insert a small screwdriver into the elliptical hole on the back of the switch, then push the lever inside of the switch toward the indicator until the actuator is unlocked (refer to the diagram on the right).

1. This unlocking method is intended for an escape from a machine when a person is locked in. For access to the unlocking entry, an access hole should be opened on the mounting panel. When opening the hole, apply proper protection against water or other foreign objects.
2. Caution: After the unlocking operation, put the screw back into the unlocking entry for safety.

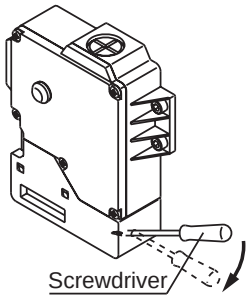

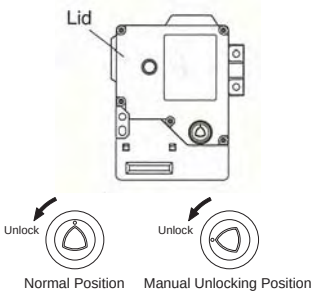

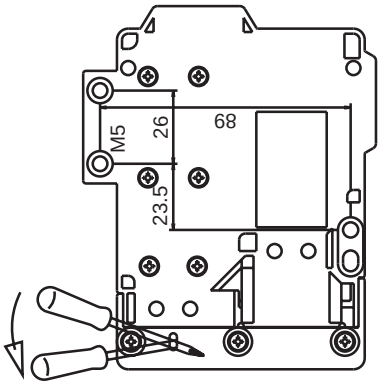

HS1C Precautions

- Regardless of door type, do not use the safety switch as a locking device. Install a locking device independently, for example, using a metal latch (also applicable to HS1E).
- The safety switch cover can be only removed with the special key wrench supplied with the switch or with the optional screwdriver (also applicable to HS1B and HS1E).
- Remove the screw located on the unlocking entry at the side of the switch using the key wrench included with the switch. Then insert a small screwdriver into the switch to push the lever inside of the switch toward the indicator until the actuator is unlocked (refer to the diagram on the right).

Caution: After the unlocking operation, put the screw back into the unlocking entry for safety.

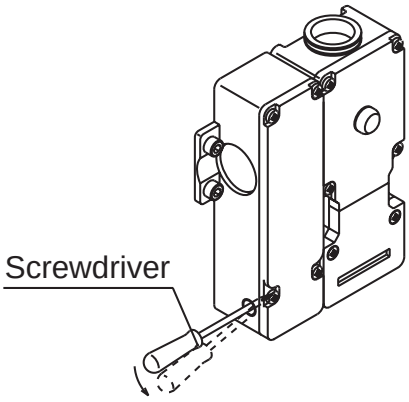

Downloaded from Arrow.com.

Operation Precautions

Applicable Crimping Terminals

- (Refer to the Crimping Terminal 1 or 2 shown in the drawing below.)
- HS1C
  Terminals No. 1 to 6: Use solid or stranded wires only (crimping terminals not applicable).
  Terminals No. 7 and 8: Crimping Terminal 1
  Ground Terminal: Crimping Terminal 2
- HS1B
  Ground Terminal: Crimping Terminal 2
  Other Terminals: Crimping Terminal 1
  HS2B, HS5B, and HS1E
  Crimping Terminal 1

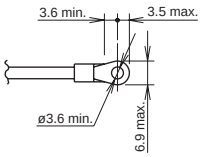

Crimping Terminal 1

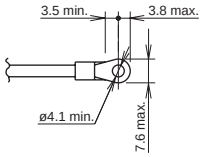

Crimping Terminal 2

Use an insulation tube on the crimping terminal.

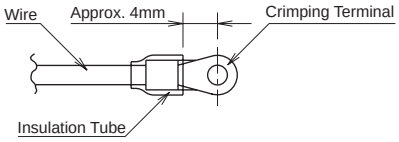

Installation Examples (see the diagrams below)

Mounting on Sliding Doors

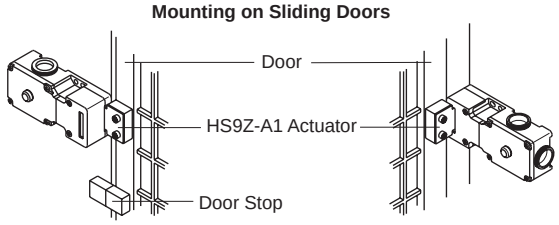

Mounting on Hinged Doors

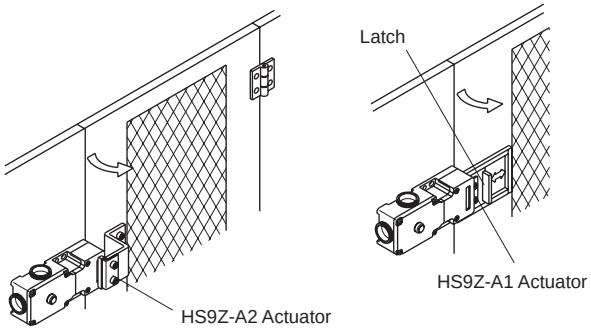

Applicable Connectors (As shown below)

- Use connectors which maintain the IP67 protection.
- Applicable Connector Dimensions
- Flex Conduit: VF03 (Japan Flex) www.nipolex.co.jp
- Steel Connector (G1/2): ALC-103
  (PF13.5): RBC-103PG13.5

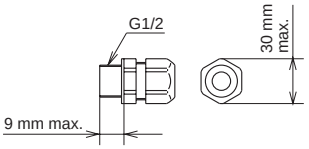

Recommended Screw Tightening Torque

- HS1C: 5.0±0.5 N-m (approx. 50±5 kgf-cm)
  (4 or 6 pcs of M5 hex socket head cap screws)
- HS1B: 5.0±0.5 N-m (approx. 50±5 kgf-cm)
  (2 or 4 pcs. of M5 hex socket head cap screws)
- HS2B: 5.0±0.5 N-m (approx. 50±5 kgf-cm)
  (2 pcs of M5 hex socket head cap screws)
- HS5B: 4.0±0.4 N-m (approx. 40±4 kgf-cm)
  (2 pcs of M4 hex socket head cap screws)
- HS1E: 5.0±0.5 N-m (approx. 50±5 kgf-cm)
  (4 or 6 pcs of M5 hex socket head cap screws)
- Actuator (HS9Z-A1/A2)
  5.0±0.5 N-m (approx. 50±5 kgf·cm)
- (2 pcs. of M6 hex socket head cap screws)
  Actuator (HS9Z-A51/A52)
- 2.0±0.2 N-m (approx. 20±2 kgf·cm)
  (2 pcs of M4 hex socket head cap screws)
- 1.0±0.2 N-m (approx. 10±2 kgf·cm)
  (2 pcs of M4 Phillips screws)

The screws are supplied by the user.

Applicable Wire Size

- HS1C: 0.5 to 0.75 mm^2 (Terminals No.1, 2, 5 to 8)
  1.0 to 1.25 mm^2 (Terminals No.3, 4, and grounding terminal)
- HS5B: 0.5 to 1.25 mm^2
- HS1E: 0.5 to 1.25 mm^2

Downloaded from Arrow.com.

Actuator Angle Adjustment

- Using the screw (M3 hex socket head screw), the actuator angle can be adjusted (refer to the dimensional drawing). Adjustable angle: (0°) to 20°
- The larger the adjusted angle of the actuator, the smaller the applicable radius of the door opening.
- After installing the actuator, open the door. Then adjust the actuator so that its edge can be inserted properly into the entry slot of the safety switch.
- Recommended tightening torque: 0.8 N-m (approx. 8.0 kgf-cm)
- After adjusting the actuator angle, apply loctite or the like to the adjustment screw so as to prevent its loosening.

Minimum Radius of Hinged Door

- When using the interlock switch on hinged doors, refer to the minimum radius of doors shown below. When using on doors with small minimum radius, use the angle adjustable actuator (HS9Z-A55).

  Note: Because deviation or dislocation of hinged doors may occur in actual applications, make sure of the correct operation before installation.

When using the HS9Z-A52 Actuator

- When the door hinge is on the extension line of the interlock switch surface:

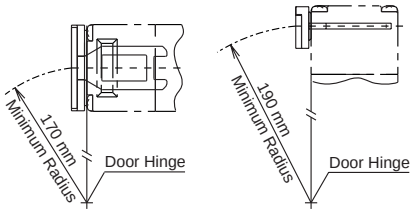

- When door hinge is on the extension line of the actuator mounting surface:

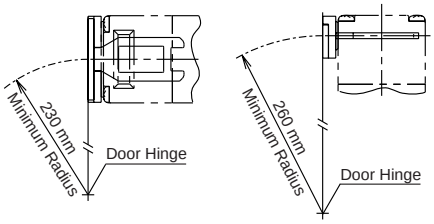

When using the HS9Z-A55 Angle Adjustable Actuator

- When door hinge is on the extension line of the interlock switch surface: 50 mm
- When door hinge is on the extension line of the actuator mounting surface: 70 mm

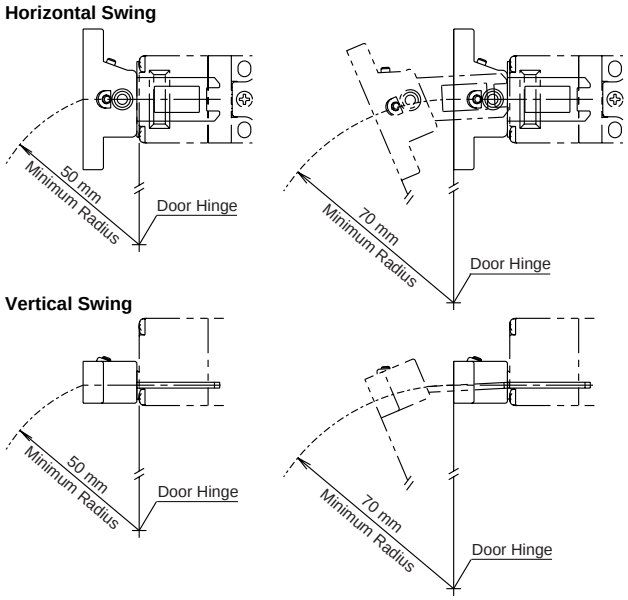

Actuator Angle Adjustment for the HS9Z-A55

- Using the angle adjustment screw, the actuator angle can be adjusted (see figures on page 370. Adjustable angle: 0 to 20°
- The larger the adjusted angle of the actuator, the smaller the applicable radius of the door opening.
- After installing the actuator, open the door. Then adjust the actuator so that its edge can be inserted properly into the actuator entry slot of the interlock switch.
- After adjusting the actuator angle, apply Loctite to the adjustment screw so that the screw will not loosen.

Applicable Cable Glands

Use a cable gland with a degree of protection IP67

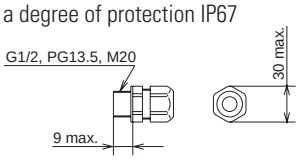

all dimensions in mm

When Using Flexible Conduits (Example)

Flexible conduit example: VF-03 (Nihon Flex)

Conduit Port Size	Plastic Cable Gland	Metal Cable Gland
G1/2	—	RLC-103 (Nihon Flex)
PG13.5	—	RBC-103PG13.5 (Nihon Flex)
M20	—	RLC-103EC20 (Nihon Flex)

When Using Multi-core Cables (Example)

Conduit Port Size	Plastic Cable Gland	Metal Cable Gland
G1/2	SCS-10* (Seiwa Electric)	ALS-16** (Nihon Flex)
PG13.5	ST13.5 (K-MECS)	ABS-**PG13.5 (Nihon Flex)
M20	ST-M20X1.5 (K-MECS)	ALS-**EC20 (Nihon Flex)

- Different cable glands are used depending on the cable sheath outside diameter. When purchasing a cable gland, confirm that the cable gland is applicable to the cable sheath outside diameter.
- When using a 1/2-14NPT cable gland, use the HS5B interlock switch with M20 conduit port (Part No.: HS5B-***BM) together with an adapter (Part No.: MA-M/NPT 20X1.5 5402-0110, K-MECS) and a gasket (Part No.: GP M20, K-MECS). Install a gasket between the interlock switch and the adapter. Apply sealing tape between the cable gland and the adapter to make sure of IP67 protection for the enclosure.

Downloaded from Arrow.com.