MICRO SPEAKER

Product No. 130595

BMS4013F-11-04H4.7-05

Issue no. BS/TES01.2345

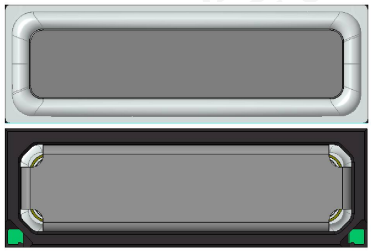

Features:

- Ultra thin
- Loud sound output
- RoHS

Drawn by	Checked by	Approved by	Customer approved
Frank Wang	Grubby. Gao	Jason.Zhang	

BESTAR Holdings Co., Ltd.

www.be-star.com | info@be-star.com

Downloaded from Arrow.com.

Content:

1 Characteristics 3
1.1 Technical terms 3
1.2 Test method 4
1.3 Frequency Response Curve 5
1.4 F0 Curve 6
1.5 Total Harmonic Distortion 7
1.6 R&B Curve 8
2 Part List 9
3 Dimension 10
4 Reliability Test 11
5 Packing 12
5.1 Packing drawing 12
5.2 Packing quantity 12
6 History change record 13
7 Important Notice 14

Downloaded from Arrow.com.

1.Characteristics

1.1 Technical terms

1. Size(uint)	40±0.2 13±0.2 H4.7±0.2 （mm）
2. Impedance at 2KHz	4±20%Ω
3. Lowest Resonance frequency	550±20%Hz(in 5cc box) 270±20%Hz(in free area)
4. Rated input power	2W(in 5cc box)
5. Maximum input power	3W(in 5cc box)
6. Buzz & Rattle(at sine wave 2.83V)	must be normal between 200~3500Hz(in 5cc box)
7. SPL(2W 10cm sine wave)	98±3dB at 2KHz (in 5cc box) 100±3dB at 500Hz (in 5cc box) 82±3dB at 200Hz (in 5cc box)
8. THD(2W 10cm sine wave)	See chapter 1.5
9. Weight	≈8.3g
10. Storage temperature	-30...+70℃
11. Operation temperature	-20...+60℃

Downloaded from Arrow.com.

1.2 Test method:

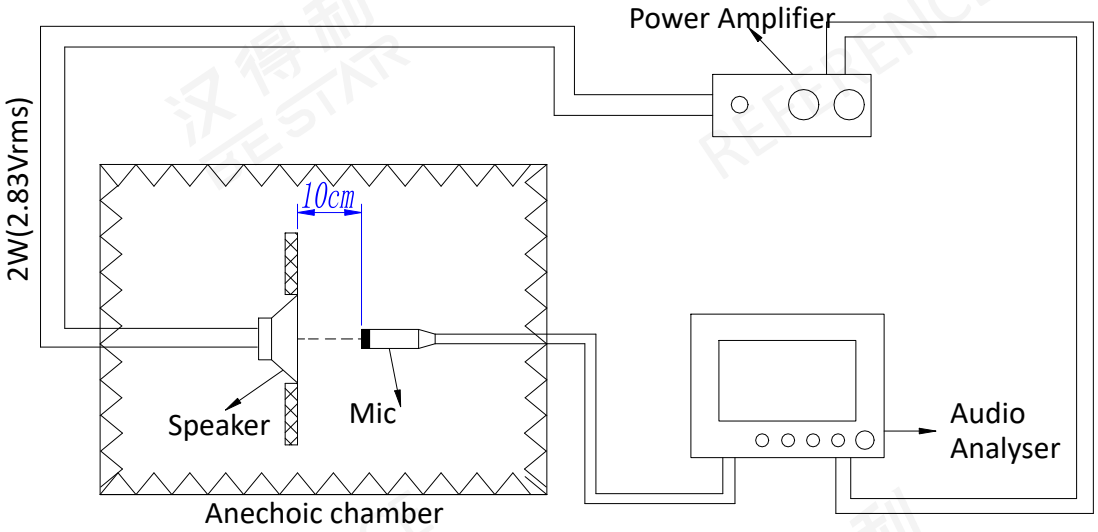

Downloaded from Arrow.com.

1.3 Frequency Response Curve (only for reference)

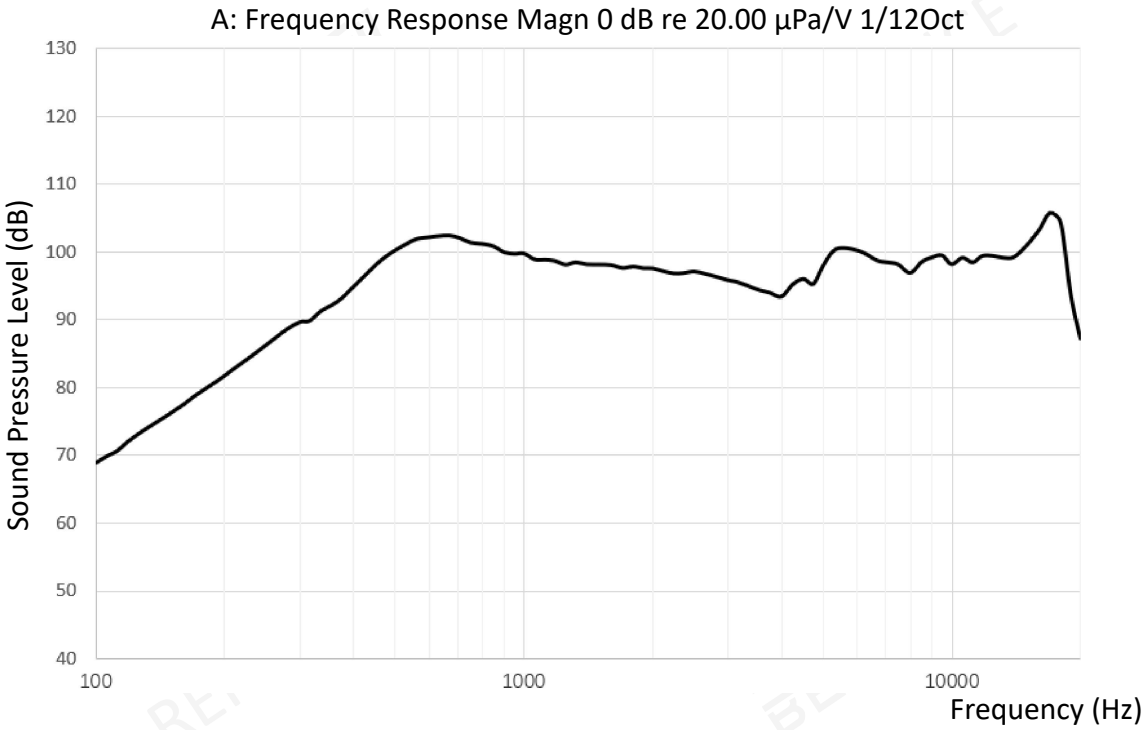

1.3.1 Sensitivity

SPL is expressed in dB rel 20 µPa,computed according to IEC 268-5.
Measurement set up according chapter 1.2 and parameters according chapter 1.3.

Downloaded from Arrow.com.

1.4 F0 Curve (only for reference)

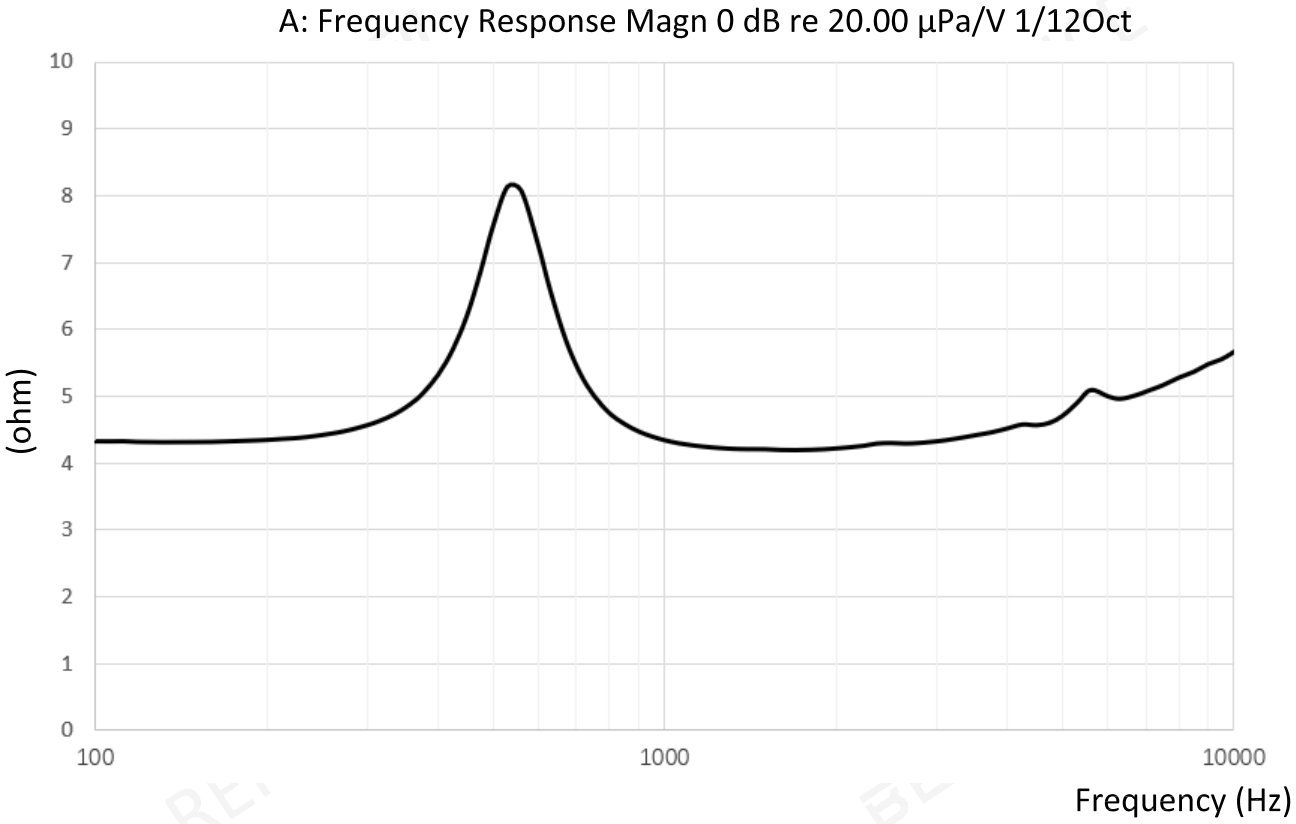

1.4.1 Resonance Frequency

Resonance frequency is measured according test set up in chapter 1.2 and parameters according chapter 1.4

Downloaded from Arrow.com.

1.5 Total Harmonic Distortion (only for reference)

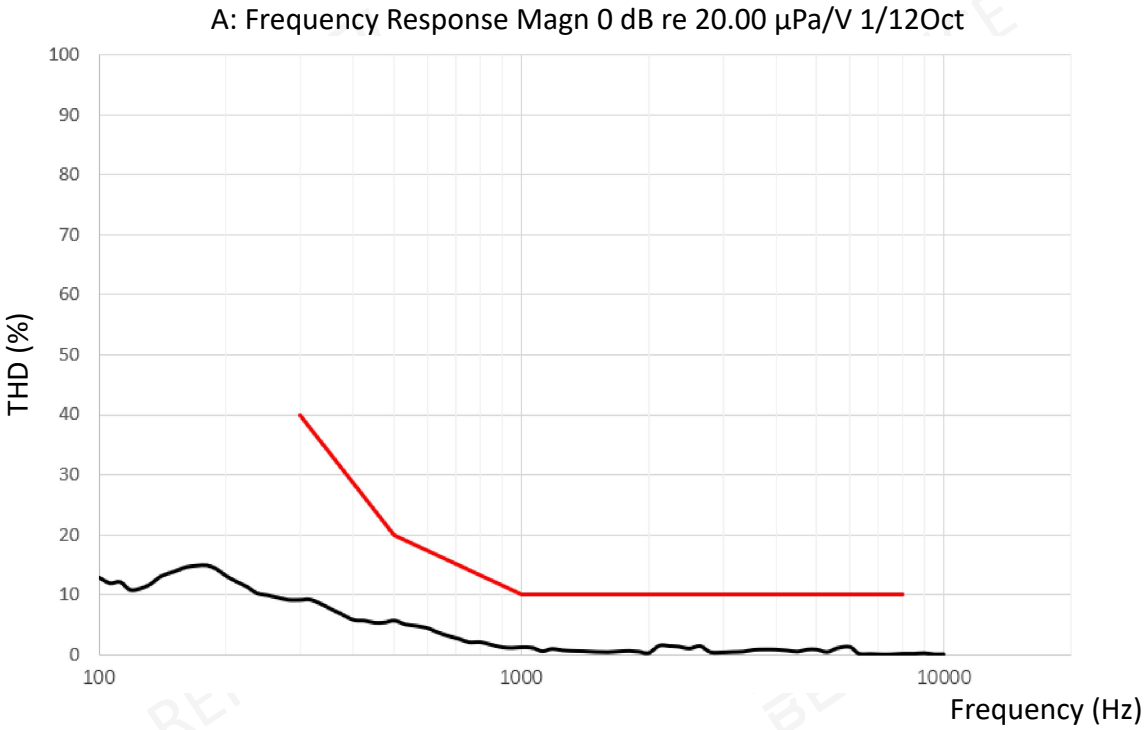

1.5.1 THD

THD is measured according test set up in chapter 1.2 and parameters according chapter 1.5

	Limit
300	40
500	20
1000	10
1500	10
8000	10

Tolerance Limit Data for THD

Downloaded from Arrow.com.

1.6 R&B Curve (only for reference)

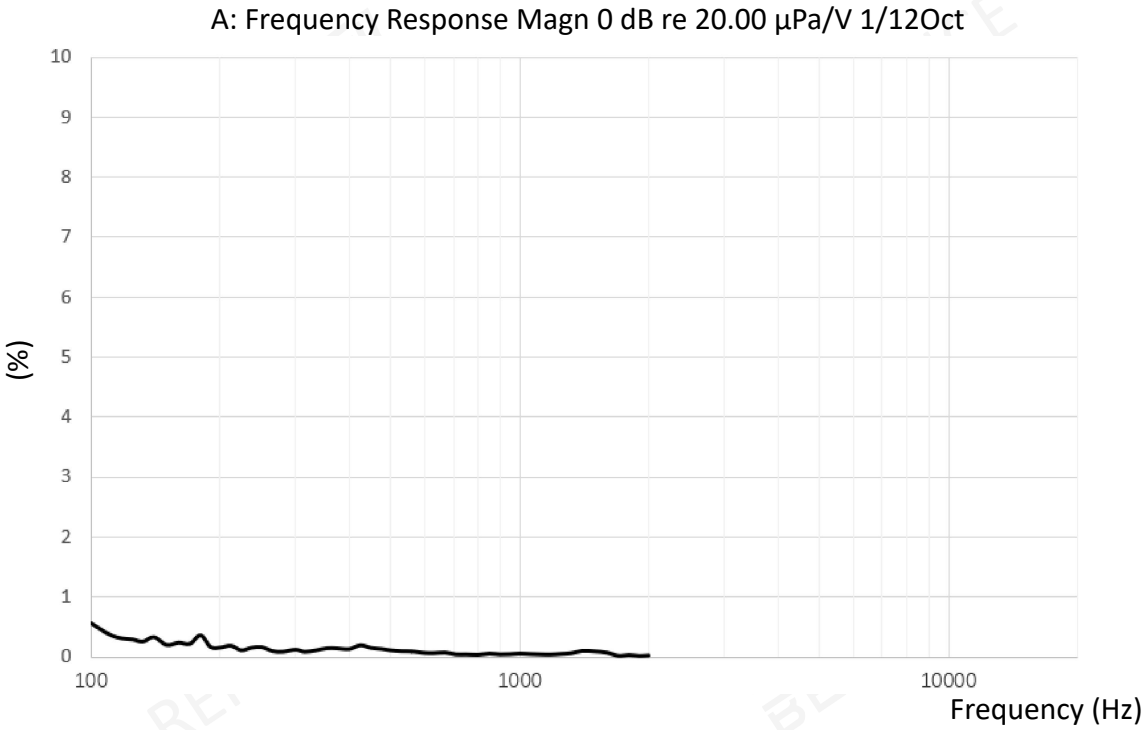

1.6.1 R&B

R&B is measured according test set up in chapter 1.2 and parameters according chapter 1.6

Downloaded from Arrow.com.

2.Part List

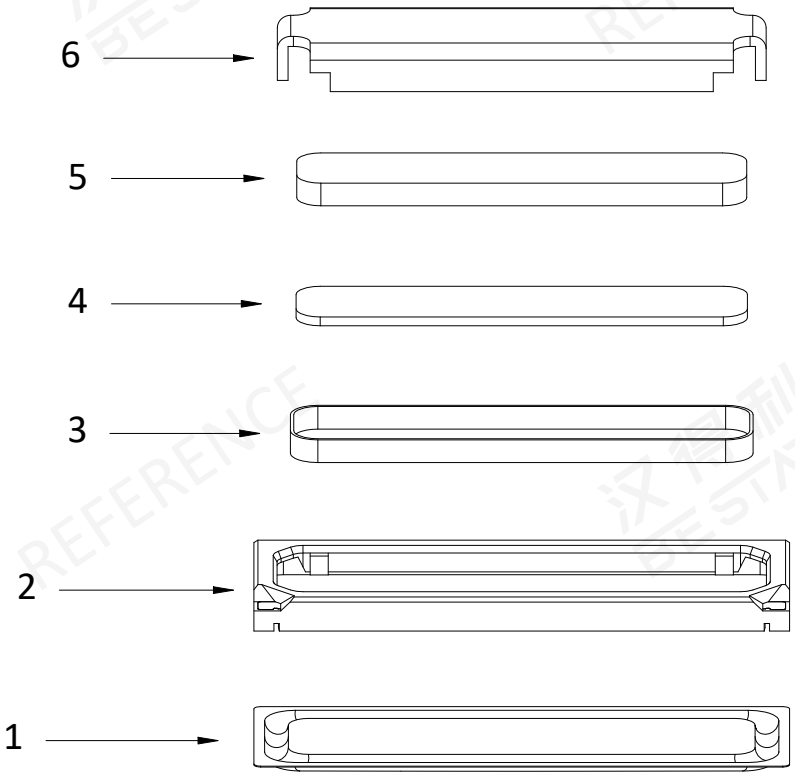

6. Yoke	SPCC
5. Magnet	NdFeB
4. Plate	SPCC
3. Voice coil	Cu
2. Frame	PPA+SUS
1. Diaphragm	PEEK+PMI

Downloaded from Arrow.com.

3. Dimension

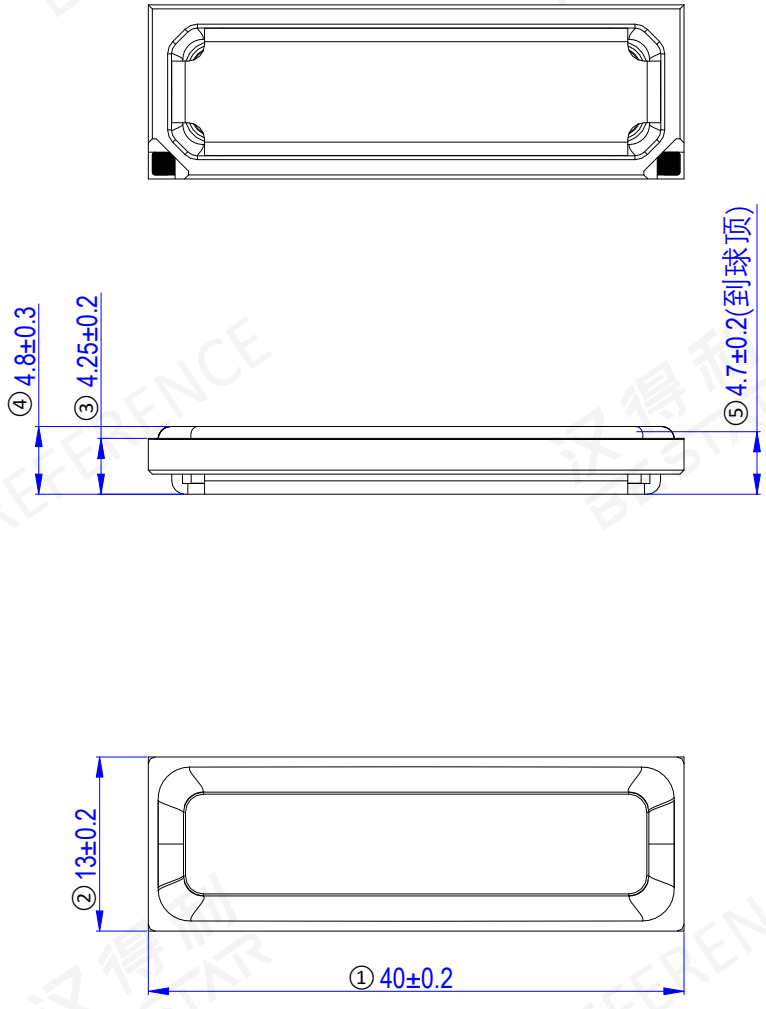

Tolerance: ±0.2mm

Downloaded from Arrow.com.

4. Reliability test

4.1High temperature preservation test

Temperature	+70 ℃
Duration	96hrs

4.2 Low temperature preservation test

Temperature	-30 ℃
Duration	96hrs

4.3 Humidity Test

Temperature	+40±3 ℃
Relative Humidity	92%-95%RH
Duration	96hrs

4.4 Thernal Humidity Cycling

The part shall be subjected 5 cycles.

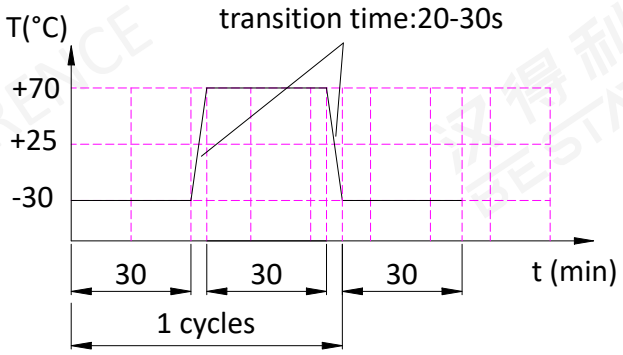

3.5 Operation Life Test

Power (Nom)	2W (in 5cc box)
Signal	Pink noise/ FO~10KHz
Duration	96hrs

3.6 Short Term Maximum Power test

Power (Nom)	3W (in 5cc box)
Signal	Pink noise/ FO~10KHz 1S/on-59S/off
Cycles	60cycles

3.7 Drop test

Height	1m
Drop face	thick ness wooden board (40mm)
Times	three times in each direction

Downloaded from Arrow.com.

5. Packing

5.1 Packing drawing (unit:mm)

TBD

REFERENCE 汉得利 BESTAR

Downloaded from Arrow.com.

6. History change record

Version	Change Items	Date	Drawn	Checked	Approved
A0		2025.05.28	Frank.Wang	Grubby. Gao	Jason.Zhang

Downloaded from Arrow.com.

7.Important Notice

7.1 The products mustn't be washed

7.2 Storage Condition（Packaging）

The products should be stored in the room ,where the temperature/humidity is stable. And avoid suchplaces where there are large temperature changes. Please store the products at the following conditions: Temperature: -10 to + 40℃ Humidity: 15 to 85% R.H.

7.3 Expire Date on Storage

Expire date (Shelf life) of the products is six months after deliveried under the conditions of a sealed and an unopened package. Please use the products within six months after deliveried.

If you store the products for a long time (more than six months), use carefully because the products may be degraded in the solderability and/or rusty.Please confirm solderability and characteristics for the products regularly.

7.4 Notice on Product Storage

(1) Please do not store the products in a chemical atmosphere (Acids, Alkali, Bases, Organic gas, Sulfides and so on), because the characteristics may be reduced at quality, and/or be degraded in the solderability due to the storage in a chemical atmosphere.

(2) Please use the products immediately after the package is opened, because the characteristics may be reduced at quality, and/or be degraded in the solderability due to storage under the poor condition.

7.5 Rated and Max input power

Rated input power

Rated input power is the maximum (limit) value which can be input to the component intentionally. If the actual input power to component keeps exceeding Rated Input power, it will damage the component acoustic performances and reliability. In the worst case, the component will get broken and no sound.

Max input power

Max input power is the maximum (limit) value for unexpected input power which is caused in the customer's circuit like surge voltage. If the actual input power to component keeps exceeding Maximum input power, it will break the component and cause no sound in a short time. Please note that component will have a risk to get broken if the unexpected input power continues.

The value of input power is set based on the sinusoidal power in the normal speaker use. If the special signal is input to component, the values of Rated and Max input power will be different. Please make a well-investigation at your laboratory in the case of the special signal input.

Downloaded from Arrow.com.