Overview

The KEMET T498 is a high temperature product that offers optimum performance characteristics in applications with operating temperatures up to 150°C. Advanced materials and testing allow T498 AUTO to perform with a reliability level of 0.5%/1000 hours at rated voltage and temperature.

This series is classified as moisture sensitivity level (MSL) 1 under J STD 020: unlimited floorlife time at ≤ 30°C/85% RH. The T498 is available in five standard EIA case sizes, with RoHS compliant terminations as standard.

Benefits

- Meets or exceeds EIA standard 535BAAC
- Tape & Reel standard packaging per EIA 481
- Symmetrical, compliant terminations
- Optional gold-plated terminations
- Laser-marked case
- 100% surge current testing
- Complies with AEC–Q200
- 100% steady-state accelerated aging
- Temperature/voltage derating is 2/3 at 150°C

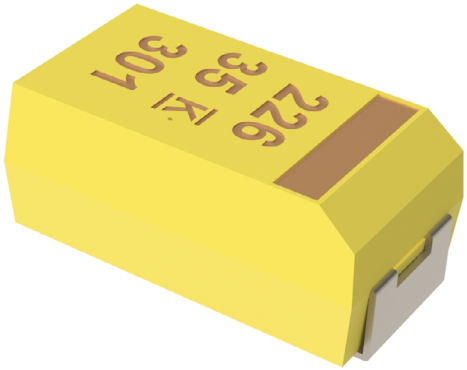

Applications

Typical applications include decoupling and filtering in industrial and automotive end applications such as DC/DC converters, portable electronics, telecommunications, and control units operating at temperatures up to 150°C.

Environmental Compliance

RoHS compliant (6/6) according to Directive 2002/95/EC when ordered with 100% Sn solder or gold-plated.
- Halogen-free
- Epoxy compliant with UL94 V–0
- Molded Epoxy complies for outgassing testing under ASTM E 595.

Downloaded from Arrow.com.

K-SIM

For a detailed analysis of specific part numbers, please visit ksim.kemet.com to access KEMET's K-SIM software. KEMET K-SIM is designed to simulate behavior of components with respect to frequency, ambient temperature, and DC bias levels.

Ordering Information

T	498	X	227	M	010	A	T	E500	
Capacitor Class	Series	Case Size	Capacitance Code (pF)	Capacitance Tolerance	Rated Voltage (VDC)	Failure Rate/ Design	Termination Finish	ESR	Packaging (C-Spec)
T = Tantalum	High Temperature 150°C	A B C D X	First two digits represent significant figures. Third digit specifies number of zeros.	K = ±10% M = ±20%	004 = 4 006 = 6.3 010 = 10 016 = 16 020 = 20 025 = 25 035 = 35 050 = 50	A = N/A	T = 100% Matte tin (Sn)-plated G = Gold-plated H = Standard solder coated (SnPb 5% Pb minimum)	E = ESR Last three digits specify ESR in mΩ (500 = 500 mΩ)	Blank = 7" reel 7280 = 13" reel

Performance Characteristics

Item	Performance Characteristics
Operating Temperature	−55°C to 150°C
Rated Capacitance Range	0.1 – 220 µF at 120 Hz/25°C
Capacitance Tolerance	K tolerance (10%), M tolerance (20%)
Rated Voltage Range	4 – 50 V
DF (120 Hz)	Refer to Part Number Electrical Specification Table
ESR (100 kHz)	Refer to Part Number Electrical Specification Table
Leakage Current	≤ 0.01 CV (µA) at rated voltage after 5 minutes

Downloaded from Arrow.com.

Qualification

Test	Condition	Characteristics			
Endurance	150°C at 2/3 rated voltage, 2,000 hours	Δ C/C	Within ±10% of initial value		
		DF	Within initial limits		
		DCL	Within 1.25 x initial limit		
		ESR	Within initial limits		
Storage Life	150°C at 0 volts, 2,000 hours	Δ C/C	Within ±10% of initial value		
		DF	Within initial limits		
		DCL	Within 1.25 x initial limit		
		ESR	Within initial limits		
Thermal Shock	MIL–STD–202, Method 107, Condition B, mounted, –55°C to 150°C, 1,000 cycles	Δ C/C	Within ±5% of initial value		
		DF	Within initial limits		
		DCL	Within 1.25 x initial limit		
		ESR	Within initial limits		
Temperature Stability	Extreme temperature exposure at a succession of continuous steps at +25°C, –55°C, +25°C, +85°C, +150°C, +25°C		+25°C	–55°C	+85°C	+150°C
		Δ C/C	IL*	±10%	±10%	±20%
		DF	IL	IL	1.5 x IL	1.5 x IL
		DCL	IL	N/A	10 x IL	12 x IL
Surge Voltage	85°C, 1.32 x rated voltage 1,000 cycles (150°C, 1.2 x rated voltage)	Δ C/C	Within ±5% of initial value		
		DF	Within initial limits		
		DCL	Within initial limits		
		ESR	Within initial limits		
Mechanical Shock/ Vibration	MIL–STD–202, Method 213, Condition I, 100 G peak MIL–STD–202, Method 204, Condition D, 10 Hz to 2,000 Hz, 20 G peak	Δ C/C	Within ±10% of initial value		
		DF	Within initial limits		
		DCL	Within initial limits		

**IL = Initial Limit*

Certification

KEMET's Internal Qualification Plan for this Tantalum series of capacitors follows AEC–Q200 guidelines.

Downloaded from Arrow.com.

ESR vs. Frequency

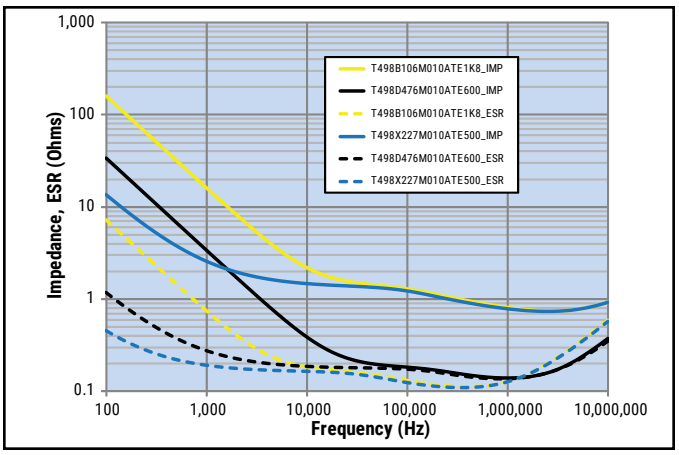

Capacitance vs. Frequency

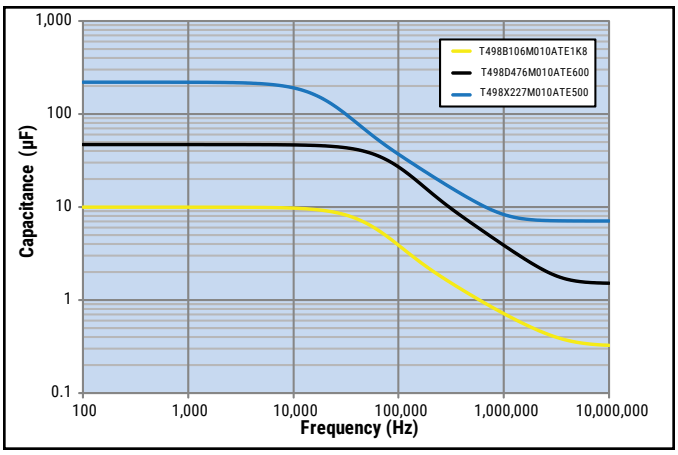

Dimensions – Millimeters (Inches)

Metric will govern

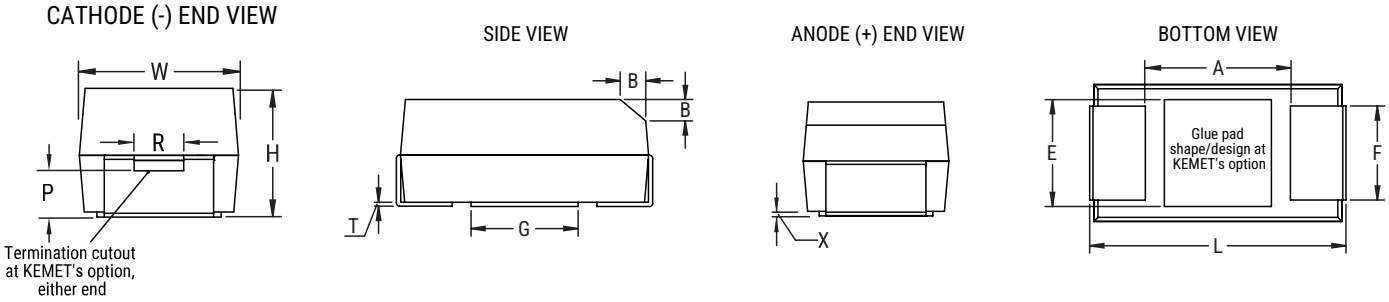

Case Size		Component												
KEMET	EIA	L	W	H	F ±0.1 ±(0.004)	S ±0.3 ±(0.012)	B ±0.15 (Ref) ±0.006	X (Ref)	P (Ref)	R (Ref)	T (Ref)	A (Min)	G (Ref)	E (Ref)
A	3216–18	3.2±0.2 (0.126±0.008)	1.6±0.2 (0.063±0.008)	1.6±0.2 (0.063±0.008)	1.2 (0.047)	0.8 (0.031)	0.4 (0.016)	0.10±0.10 (0.004±0.004)	0.4 (0.016)	0.4 (0.016)	0.13 (0.005)	1.2 (0.047)	1.1 (0.043)	1.3 (0.051)
B	3528–21	3.5±0.2 (0.138±0.008)	2.8±0.2 (0.110±0.008)	1.9±0.2 (0.075±0.008)	2.2 (0.087)	0.8 (0.031)	0.4 (0.016)	0.10±0.10 (0.004±0.004)	0.5 (0.020)	1.0 (0.039)	0.13 (0.005)	1.9 (0.075)	1.8 (0.071)	2.2 (0.087)
C	6032–28	6.0±0.3 (0.236±0.012)	3.2±0.3 (0.126±0.012)	2.5±0.3 (0.098±0.012)	2.2 (0.087)	1.3 (0.051)	0.5 (0.020)	0.10±0.10 (0.004±0.004)	0.9 (0.035)	1.0 (0.039)	0.13 (0.005)	3.1 (0.122)	2.8 (0.110)	2.4 (0.094)
D	7343–31	7.3±0.3 (0.287±0.012)	4.3±0.3 (0.169±0.012)	2.8±0.3 (0.110±0.012)	2.4 (0.094)	1.3 (0.051)	0.5 (0.020)	0.10±0.10 (0.004±0.004)	0.9 (0.035)	1.0 (0.039)	0.13 (0.005)	3.8 (0.150)	3.5 (0.138)	3.5 (0.138)
X	7343–43	7.3±0.3 (0.287±0.012)	4.3±0.3 (0.169 ±0.012)	4.0±0.3 (0.157±0.012)	2.4 (0.094)	1.3 (0.051)	0.5 (0.020)	0.10±0.10 (0.004±0.004)	1.7 (0.067)	1.0 (0.039)	0.13 (0.005)	3.8 (0.150)	3.5 (0.138)	3.5 (0.138)

Notes: (Ref) – Dimensions provided for reference only.

Downloaded from Arrow.com.

Table 1 – Ratings & Part Number Reference

Rated Voltage	Rated Cap	Case Code/ Case Size	KEMET Part Number	DC Leakage	DF	ESR	Maximum Allowable Ripple Current (rms)			Maximum Operating Temp	MSL
VDC at 85°C	µF	KEMET/EIA	(See below for part options)	µA at +25°C Max/5 Min	% at +25°C 120 Hz Max	mΩ at 25°C 100 kHz Max	mA at +25°C 100 kHz	mA at +85°C 100 kHz	mA at +125°C 100 kHz	°C	Reflow Temp ≤ 260°C
4	6.8	A/3216-18	T498A685(1)004A(2)E3K9	0.5	4.5	3900	139	125.1	55.6	150	1
4	10	A/3216-18	T498A106(1)004A(2)E2K9	0.5	4.5	2900	161	144.9	64.4	150	1
4	10	B/3528-21	T498B106(1)004A(2)E2K7	0.5	4.5	2700	177	159.3	70.8	150	1
4	15	A/3216-18	T498A156(1)004A(2)E2K7	0.6	4.5	2700	167	150.3	66.8	150	1
4	15	B/3528-21	T498B156(1)004A(2)E2K6	0.6	4.5	2600	181	162.9	72.4	150	1
4	22	B/3528-21	T498B226(1)004A(2)E1K8	0.9	4.5	1800	217	195.3	86.8	150	1
4	22	C/6032-28	T498C226(1)004A(2)E1K7	0.9	4.5	1700	254	228.6	101.6	150	1
4	33	B/3528-21	T498B336(1)004A(2)E1K5	1.3	4.5	1500	238	214.2	95.2	150	1
4	33	C/6032-28	T498C336(1)004A(2)E1K5	1.3	4.5	1500	271	243.9	108.4	150	1
4	47	C/6032-28	T498C476(1)004A(2)E1K1	1.9	4.5	1100	316	284.4	126.4	150	1
4	68	C/6032-28	T498C686(1)004A(2)E900	2.7	4.5	900	350	315	140	150	1
4	68	D/7343-31	T498D686(1)004A(2)E800	2.7	4.5	800	433	389.7	173.2	150	1
4	100	D/7343-31	T498D107(1)004A(2)E600	4.0	6.0	600	500	450	200	150	1
4	150	D/7343-31	T498D157(1)004A(2)E600	6.0	6.0	600	500	450	200	150	1
6.3	2.2	A/3216-18	T498A225(1)006A(2)E6K5	0.5	4.5	6500	107	96	43	150	1
6.3	3.3	A/3216-18	T498A335(1)006A(2)E4K6	0.5	4.5	4600	128	115	51	150	1
6.3	4.7	A/3216-18	T498A475(1)006A(2)E3K6	0.5	4.5	3600	144	130	58	150	1
6.3	6.8	A/3216-18	T498A685(1)006A(2)E2K9	0.5	4.5	2900	161	145	64	150	1
6.3	6.8	B/3528-21	T498B685(1)006A(2)E2K7	0.5	4.5	2700	177	159	71	150	1
6.3	10	A/3216-18	T498A106(1)006A(2)E2K7	0.6	4.5	2700	167	150	67	150	1
6.3	10	B/3528-21	T498B106(1)006A(2)E2K1	0.6	4.5	2100	201	181	80	150	1
6.3	15	B/3528-21	T498B156(1)006A(2)E1K8	0.9	4.5	1800	217	195	87	150	1
6.3	15	C/6032-28	T498C156(1)006A(2)E1K7	0.9	4.5	1700	254	229	102	150	1
6.3	22	B/3528-21	T498B226(1)006A(2)E1K5	1.4	4.5	1500	238	214	95	150	1
6.3	22	C/6032-28	T498C226(1)006A(2)E1K3	1.4	4.5	1300	291	262	116	150	1
6.3	33	B/3528-21	T498B336(1)006A(2)E1K7	2.1	6.0	1700	224	202	90	150	1
6.3	33	C/6032-28	T498C336(1)006A(2)E1K1	2.1	4.5	1100	316	284	126	150	1
6.3	47	C/6032-28	T498C476(1)006A(2)E800	3.0	4.5	800	371	334	148	150	1
6.3	47	D/7343-31	T498D476(1)006A(2)E800	3.0	4.5	800	433	390	173	150	1
6.3	68	C/6032-28	T498C686(1)006A(2)E800	4.3	4.5	800	371	334	148	150	1
6.3	68	D/7343-31	T498D686(1)006A(2)E600	4.3	4.5	600	500	450	200	150	1
6.3	100	D/7343-31	T498D107(1)006A(2)E600	6.3	6.0	600	500	450	200	150	1
6.3	150	D/7343-31	T498D157(1)006A(2)E500	9.5	6.0	500	548	493	219	150	1
10	1.5	A/3216-18	T498A155(1)010A(2)E6K5	0.5	4.5	6500	107	96	43	150	1
10	2.2	A/3216-18	T498A225(1)010A(2)E4K6	0.5	4.5	4600	128	115	51	150	1
10	3.3	A/3216-18	T498A335(1)010A(2)E3K6	0.5	4.5	3600	144	130	58	150	1
10	4.7	A/3216-18	T498A475(1)010A(2)E2K9	0.5	4.5	2900	161	145	64	150	1
10	4.7	B/3528-21	T498B475(1)010A(2)E2K7	0.5	4.5	2700	177	159	71	150	1
10	6.8	A/3216-18	T498A685(1)010A(2)E2K7	0.7	4.5	2700	167	150	67	150	1
10	6.8	B/3528-21	T498B685(1)010A(2)E2K1	0.7	4.5	2100	201	181	80	150	1
10	6.8	B/3528-21	T498B685(1)010A(2)E1K8	0.7	4.5	1800	217	195	87	150	1
10	10	A/3216-18	T498A106(1)010A(2)E3K4	1.0	4.5	3400	149	134	60	150	1
10	10	B/3528-21	T498B106(1)010A(2)E1K8	1.0	4.5	1800	217	195	87	150	1
10	10	B/3528-21	T498B106(1)010A(2)E1K5	1.0	4.5	1500	238	214	95	150	1
10	10	C/6032-28	T498C106(1)010A(2)E1K7	1.0	4.5	1700	254	229	102	150	1
VDC at 85°C	µF	KEMET/EIA	(See below for part options)	µA at +25°C Max/5 Min	% at +25°C 120 Hz Max	mΩ at 25°C 100 kHz Max	mA at +25°C 100 kHz	mA at +85°C 100 kHz	mA at +125°C 100 kHz	°C	Reflow Temp ≤ 260°C
Rated Voltage	Rated Cap	Case Code/ Case Size	KEMET Part Number	DC Leakage	DF	ESR	Maximum Allowable Ripple Current (rms)			Maximum Operating Temp	MSL

(1) To complete KEMET part number, insert M for ±20% or K for ±10%. Designates Capacitance tolerance.
(2) To complete KEMET part number, insert T = 100% Matte Tin (Sn) Plated, G = Gold Plated, H = Standard Solder coated (SnPb 5% Pb minimum). Designates Termination Finish.
Refer to Ordering Information for additional detail.
Higher voltage ratings and tighter tolerance product including ESR may be substituted within the same size at KEMET's option. Voltage substitution will be marked with the higher voltage rating. Substitutions can include better than series.

Downloaded from Arrow.com.

Table 1 – Ratings & Part Number Reference cont.

Rated Voltage	Rated Cap	Case Code/ Case Size	KEMET Part Number	DC Leakage	DF	ESR	Maximum Allowable Ripple Current (rms)			Maximum Operating Temp	MSL
VDC at 85°C	µF	KEMET/EIA	(See below for part options)	µA at +25°C Max/5 Min	% at +25°C 120 Hz Max	mΩ at 25°C 100 kHz Max	mA at +25°C 100 kHz	mA at +85°C 100 kHz	mA at +125°C 100 kHz	°C	Reflow Temp ≤ 260°C
10	15	B/3528-21	T498B156(1)010A(2)E1K5	1.5	4.5	1500	238	214	95	150	1
10	15	B/3528-21	T498B156(1)010A(2)E650	1.5	4.5	650	362	326	145	150	1
10	15	C/6032-28	T498C156(1)010A(2)E1K4	1.5	4.5	1400	280	252	112	150	1
10	22	B/3528-21	T498B226(1)010A(2)E1K5	2.2	6.0	1500	238	214	95	150	1
10	22	C/6032-28	T498C226(1)010A(2)E1K1	2.2	4.5	1100	316	284	126	150	1
10	33	C/6032-28	T498C336(1)010A(2)E900	3.3	4.5	900	350	315	140	150	1
10	33	D/7343-31	T498D336(1)010A(2)E800	3.3	4.5	800	433	390	173	150	1
10	47	C/6032-28	T498C476(1)010A(2)E800	4.7	4.5	800	371	334	148	150	1
10	47	C/6032-28	T498C476(1)010A(2)E350	4.7	4.5	350	561	505	224	150	1
10	47	D/7343-31	T498D476(1)010A(2)E600	4.7	4.5	600	500	450	200	150	1
10	68	D/7343-31	T498D686(1)010A(2)E600	6.8	4.5	600	500	450	200	150	1
10	100	D/7343-31	T498D107(1)010A(2)E600	10.0	6.0	600	500	450	200	150	1
10	150	X/7343-43	T498X157(1)010A(2)E500	15.0	6.0	500	574	517	230	150	1
10	220	X/7343-43	T498X227(1)010A(2)E500	22.0	9.0	500	574	517	230	150	1
16	1	A/3216-18	T498A105(1)016A(2)E6K5	0.5	3.0	6500	107	96	43	150	1
16	1.5	A/3216-18	T498A155(1)016A(2)E5K2	0.5	4.5	5200	120	108	48	150	1
16	2.2	A/3216-18	T498A225(1)016A(2)E4K3	0.5	4.5	4300	132	119	53	150	1
16	3.3	A/3216-18	T498A335(1)016A(2)E3K4	0.5	4.5	3400	149	134	60	150	1
16	3.3	B/3528-21	T498B335(1)016A(2)E3K0	0.5	4.5	3000	168	151	67	150	1
16	4.7	A/3216-18	T498A475(1)016A(2)E3K0	0.8	4.5	3000	158	142	63	150	1
16	4.7	B/3528-21	T498B475(1)016A(2)E2K1	0.8	4.5	2100	201	181	80	150	1
16	4.7	B/3528-21	T498B475(1)016A(2)E1K0	0.8	4.5	1000	292	263	117	150	1
16	6.8	A/3216-18	T498A685(1)016A(2)E2K0	1.1	4.5	2000	194	175	78	150	1
16	6.8	A/3216-18	T498A685(1)016A(2)E2K6	1.1	4.5	2600	170	153	68	150	1
16	6.8	B/3528-21	T498B685(1)016A(2)E1K8	1.1	4.5	1800	217	195	87	150	1
16	6.8	C/6032-28	T498C685(1)016A(2)E1K7	1.1	4.5	1700	254	229	102	150	1
16	10	B/3528-21	T498B106(1)016A(2)E2K8	1.6	4.5	2800	174	157	70	150	1
16	10	B/3528-21	T498B106(1)016A(2)E1K5	1.6	4.5	1500	238	214	95	150	1
16	10	C/6032-28	T498C106(1)016A(2)E1K4	1.6	4.5	1400	280	252	112	150	1
16	10	C/6032-28	T498C106(1)016A(2)E800	1.6	4.5	800	371	334	148	150	1
16	15	C/6032-28	T498C156(1)016A(2)E1K1	2.4	4.5	1100	316	284	126	150	1
16	22	B/3528-21	T498B226(1)016A(2)E1K9	3.5	6.0	1900	212	191	85	150	1
16	22	C/6032-28	T498C226(1)016A(2)E1K0	3.5	4.5	1000	332	299	133	150	1
16	22	C/6032-28	T498C226(1)016A(2)E400	3.5	4.5	400	524	472	210	150	1
16	22	D/7343-31	T498D226(1)016A(2)E800	3.5	4.5	800	433	390	173	150	1
16	33	C/6032-28	T498C336(1)016A(2)E900	5.3	4.5	900	350	315	140	150	1
16	33	D/7343-31	T498D336(1)016A(2)E700	5.3	4.5	700	463	417	185	150	
16	33	D/7343-31	T498D336(1)016A(2)E600	5.3	4.5	600	500	450	200	150	1
16	33	D/7343-31	T498D336(1)016A(2)E230	5.3	4.5	230	808	727	323	150	1
16	47	C/6032-28	T498C476(1)016A(2)E800	7.5	4.5	800	371	334	148	150	1
16	47	C/6032-28	T498C476(1)016A(2)E500	7.5	4.5	500	469	422	188	150	1
16	47	D/7343-31	T498D476(1)016A(2)E600	7.5	4.5	600	500	450	200	150	1
16	47	D/7343-31	T498D476(1)016A(2)E450	7.5	4.5	450	577	519	231	150	1
16	68	D/7343-31	T498D686(1)016A(2)E600	10.9	4.5	600	500	450	200	150	1
16	100	X/7343-43	T498X107(1)016A(2)E075	16.0	6	75	1483	1335	593	150	1
VDC at 85°C	µF	KEMET/EIA	(See below for part options)	µA at +25°C Max/5 Min	% at +25°C 120 Hz Max	mΩ at 25°C 100 kHz Max	mA at +25°C 100 kHz	mA at +85°C 100 kHz	mA at +125°C 100 kHz	°C	Reflow Temp ≤ 260°C
Rated Voltage	Rated Cap	Case Code/ Case Size	KEMET Part Number	DC Leakage	DF	ESR	Maximum Allowable Ripple Current (rms)			Maximum Operating Temp	MSL

(1) To complete KEMET part number, insert M for ±20% or K for ±10%. Designates Capacitance tolerance.
(2) To complete KEMET part number, insert T = 100% Matte Tin (Sn) Plated, G = Gold Plated, H = Standard Solder coated (SnPb 5% Pb minimum). Designates Termination Finish.
Refer to Ordering Information for additional detail.
Higher voltage ratings and tighter tolerance product including ESR may be substituted within the same size at KEMET's option. Voltage substitution will be marked with the higher voltage rating. Substitutions can include better than series.

Downloaded from Arrow.com.

Table 1 – Ratings & Part Number Reference cont.

Rated Voltage	Rated Cap	Case Code/ Case Size	KEMET Part Number	DC Leakage	DF	ESR	Maximum Allowable Ripple Current (rms)			Maximum Operating Temp	MSL
VDC at 85°C	µF	KEMET/EIA	(See below for part options)	µA at +25°C Max/5 Min	% at +25°C 120 Hz Max	mΩ at 25°C 100 kHz Max	mA at +25°C 100 kHz	mA at +85°C 100 kHz	mA at +125°C 100 kHz	°C	Reflow Temp ≤ 260°C
20	0.68	A/3216-18	T498A684(1)020A(2)E7K8	0.5	3.0	7800	98	88	39	150	1
20	1	A/3216-18	T498A105(1)020A(2)E5K9	0.5	3.0	5900	113	102	45	150	1
20	1.5	A/3216-18	T498A155(1)020A(2)E5K2	0.5	4.5	5200	120	108	48	150	1
20	2.2	B/3528-21	T498B225(1)020A(2)E3K6	0.5	4.5	3600	154	139	62	150	1
20	3.3	B/3528-21	T498B335(1)020A(2)E2K7	0.7	4.5	2700	177	159	71	150	1
20	4.7	B/3528-21	T498B475(1)020A(2)E1K9	0.9	4.5	1900	212	191	85	150	1
20	4.7	C/6032-28	T498C475(1)020A(2)E1K7	0.9	4.5	1700	254	229	102	150	1
20	6.8	C/6032-28	T498C685(1)020A(2)E1K3	1.4	4.5	1300	291	262	116	150	1
20	6.8	C/6032-28	T498C685(1)020A(2)E450	1.4	4.5	450	494	445	198	150	1
20	10	C/6032-28	T498C106(1)020A(2)E1K1	2.0	4.5	1100	316	284	126	150	1
20	15	C/6032-28	T498C156(1)020A(2)E1K0	3.0	4.5	1000	332	299	133	150	1
20	15	D/7343-31	T498D156(1)020A(2)E900	3.0	4.5	900	408	367	163	150	1
20	22	D/7343-31	T498D226(1)020A(2)E700	4.4	4.5	700	463	417	185	150	1
20	33	D/7343-31	T498D336(1)020A(2)E600	6.6	4.5	600	500	450	200	150	1
20	33	D/7343-31	T498D336(1)020A(2)E450	6.6	4.5	450	577	519	231	150	1
25	0.47	A/3216-18	T498A474(1)025A(2)E8K5	0.5	3.0	8500	94	85	38	150	1
25	0.68	A/3216-18	T498A684(1)025A(2)E6K5	0.5	3.0	6500	107	96	43	150	1
25	1	A/3216-18	T498A105(1)025A(2)E5K2	0.5	3.0	5200	120	108	48	150	1
25	1.5	B/3528-21	T498B155(1)025A(2)E4K2	0.5	4.5	4200	142	128	57	150	1
25	2.2	B/3528-21	T498B225(1)025A(2)E3K0	0.6	4.5	3000	168	151	67	150	1
25	3.3	C/6032-28	T498C335(1)025A(2)E2K0	0.8	4.5	2000	235	212	94	150	1
25	4.7	C/6032-28	T498C475(1)025A(2)E1K6	1.2	4.5	1600	262	236	105	150	1
25	6.8	C/6032-28	T498C685(1)025A(2)E1K4	1.7	4.5	1400	280	252	112	150	1
25	6.8	D/7343-31	T498D685(1)025A(2)E1K1	1.7	4.5	1100	369	332	148	150	1
25	10	C/6032-28	T498C106(1)025A(2)E800	2.5	4.5	800	371	334	148	150	1
25	10	C/6032-28	T498C106(1)025A(2)E1K1	2.5	4.5	1100	316	284	126	150	1
25	10	C/6032-28	T498C106(1)025A(2)E1K8	2.5	4.5	1800	247	222	99	150	1
25	10	D/7343-31	T498D106(1)025A(2)E1K0	2.5	4.5	1000	387	348	155	150	1
25	15	D/7343-31	T498D156(1)025A(2)E700	3.8	4.5	700	463	417	185	150	1
25	22	D/7343-31	T498D226(1)025A(2)E600	5.5	4.5	600	500	450	200	150	1
25	33	D/7343-31	T498D336(1)025A(2)E600	8.3	6.0	600	500	450	200	150	1
35	0.1	A/3216-18	T498A104(1)035A(2)E28K	0.5	3.0	28000	52	47	21	150	1
35	0.15	A/3216-18	T498A154(1)035A(2)E23K	0.5	3.0	23000	57	51	23	150	1
35	0.22	A/3216-18	T498A224(1)035A(2)E15K	0.5	3.0	15000	71	64	28	150	1
35	0.33	A/3216-18	T498A334(1)035A(2)E11K	0.5	3.0	11000	83	75	33	150	1
35	0.47	A/3216-18	T498A474(1)035A(2)E10K	0.5	3.0	10000	87	78	35	150	1
35	0.47	B/3528-21	T498B474(1)035A(2)E8K0	0.5	3.0	8000	103	93	41	150	1
35	0.68	B/3528-21	T498B684(1)035A(2)E5K5	0.5	3.0	5500	124	112	50	150	1
35	1	A/3216-18	T498A105(1)035A(2)E10K	0.5	4.0	10000	87	78	35	150	1
35	1	B/3528-21	T498B105(1)035A(2)E4K4	0.5	3.0	4400	139	125	56	150	1
35	1.5	C/6032-28	T498C155(1)035A(2)E3K3	0.5	4.5	3300	183	165	73	150	1
35	2.2	C/6032-28	T498C225(1)035A(2)E2K2	0.8	4.5	2200	224	202	90	150	1
35	3.3	C/6032-28	T498C335(1)035A(2)E1K7	1.2	4.5	1700	254	229	102	150	1
35	4.7	C/6032-28	T498C475(1)035A(2)E1K3	1.6	4.5	1300	291	262	116	150	1
35	4.7	D/7343-31	T498D475(1)035A(2)E1K0	1.6	4.5	1000	387	348	155	150	1
35	6.8	D/7343-31	T498D685(1)035A(2)E900	2.4	4.5	900	408	367	163	150	1
VDC at 85°C	µF	KEMET/EIA	(See below for part options)	µA at +25°C Max/5 Min	% at +25°C 120 Hz Max	mΩ at 25°C 100 kHz Max	mA at +25°C 100 kHz	mA at +85°C 100 kHz	mA at +125°C 100 kHz	°C	Reflow Temp ≤ 260°C
Rated Voltage	Rated Cap	Case Code/ Case Size	KEMET Part Number	DC Leakage	DF	ESR	Maximum Allowable Ripple Current (rms)			Maximum Operating Temp	MSL

(1) To complete KEMET part number, insert M for ±20% or K for ±10%. Designates Capacitance tolerance.
(2) To complete KEMET part number, insert T = 100% Matte Tin (Sn) Plated, G = Gold Plated, H = Standard Solder coated (SnPb 5% Pb minimum). Designates Termination Finish.
Refer to Ordering Information for additional detail.
Higher voltage ratings and tighter tolerance product including ESR may be substituted within the same size at KEMET's option. Voltage substitution will be marked with the higher voltage rating. Substitutions can include better than series.

Downloaded from Arrow.com.

Table 1 – Ratings & Part Number Reference cont.

Rated Voltage	Rated Cap	Case Code/ Case Size	KEMET Part Number	DC Leakage	DF	ESR	Maximum Allowable Ripple Current (rms)			Maximum Operating Temp	MSL
VDC at 85°C	µF	KEMET/EIA	(See below for part options)	µA at +25°C Max/5 Min	% at +25°C 120 Hz Max	mΩ at 25°C 100 kHz Max	mA at +25°C 100 kHz	mA at +85°C 100 kHz	mA at +125°C 100 kHz	°C	Reflow Temp ≤ 260°C
35	10	D/7343-31	T498D106(1)035A(2)E700	3.5	4.5	700	463	417	185	150	1
35	10	D/7343-31	T498D106(1)035A(2)E440	3.5	4.5	440	584	526	234	150	1
35	15	D/7343-31	T498D156(1)035A(2)E700	5.3	6.0	700	463	417	185	150	1
35	15	X/7343-43	T498X156(1)035A(2)E500	5.3	4.5	500	574	517	230	150	1
35	22	D/7343-31	T498D226(1)035A(2)E700	7.7	6.0	700	463	417	185	150	1
35	22	X/7343-43	T498X226(1)035A(2)E500	7.7	4.5	500	574	517	230	150	1
35	22	X/7343-43	T498X226(1)035A(2)E440	7.7	4.5	440	612	551	245	150	1
35	33	X/7343-43	T498X336(1)035A(2)E500	11.6	6.0	500	574	517	230	150	1
35	47	X/7343-43	T498X476(1)035A(2)E500	16.5	6.0	500	574	517	230	150	1
35	47	X/7343-43	T498X476(1)035A(2)E350	16.5	6.0	350	687	618	275	150	1
50	0.1	A/3216-18	T498A104(1)050A(2)E27K	0.5	3.0	27000	53	48	21	150	1
50	0.15	B/3528-21	T498B154(1)050A(2)E22K	0.5	3.0	22000	62	56	25	150	1
50	0.22	B/3528-21	T498B224(1)050A(2)E15K	0.5	3.0	15000	75	68	30	150	1
50	0.33	B/3528-21	T498B334(1)050A(2)E11K	0.5	3.0	11000	88	79	35	150	1
50	0.47	C/6032-28	T498C474(1)050A(2)E6K5	0.5	3.0	6500	130	117	52	150	1
50	0.68	C/6032-28	T498C684(1)050A(2)E5K5	0.5	3.0	5500	141	127	56	150	1
50	1	C/6032-28	T498C105(1)050A(2)E3K3	0.5	3.0	3300	183	165	73	150	1
50	1.5	D/7343-31	T498D155(1)050A(2)E2K8	0.8	4.5	2800	231	208	92	150	1
50	2.2	D/7343-31	T498D225(1)050A(2)E2K0	1.1	4.5	2000	274	247	110	150	1
50	3.3	D/7343-31	T498D335(1)050A(2)E1K1	1.7	4.5	1100	369	332	148	150	1
50	4.7	D/7343-31	T498D475(1)050A(2)E900	2.4	4.5	900	408	367	163	150	1
50	4.7	D/7343-31	T498D475(1)050A(2)E480	2.4	4.5	480	559	503	224	150	1
50	6.8	D/7343-31	T498D685(1)050A(2)E700	3.4	6.0	700	463	417	185	150	1
50	6.8	X/7343-43	T498X685(1)050A(2)E500	3.4	4.5	500	574	517	230	150	1
50	10	D/7343-31	T498D106(1)050A(2)E1K0	5.0	6.0	1000	387	348	155	150	1
50	10	X/7343-43	T498X106(1)050A(2)E500	5.0	4.5	500	574	517	230	150	1
50	10	X/7343-43	T498X106(1)050A(2)E1K0	5.0	4.5	1000	406	365	162	150	1
50	15	X/7343-43	T498X156(1)050A(2)E500	7.5	6.0	500	574	517	230	150	1
50	22	X/7343-43	T498X226(1)050A(2)E500	11.0	6.0	500	574	517	230	150	1
VDC at 85°C	µF	KEMET/EIA	(See below for part options)	µA at +25°C Max/5 Min	% at +25°C 120 Hz Max	mΩ at 25°C 100 kHz Max	mA at +25°C 100 kHz	mA at +85°C 100 kHz	mA at +125°C 100 kHz	°C	Reflow Temp ≤ 260°C
Rated Voltage	Rated Cap	Case Code/ Case Size	KEMET Part Number	DC Leakage	DF	ESR	Maximum Allowable Ripple Current (rms)			Maximum Operating Temp	MSL

(1) To complete KEMET part number, insert M for ±20% or K for ±10%. Designates Capacitance tolerance.
(2) To complete KEMET part number, insert T = 100% Matte Tin (Sn)-Plated, G = Gold-Plated, H = Standard Solder coated (SnPb 5% Pb minimum). Designates Termination Finish.
Refer to Ordering Information for additional detail.
Higher voltage ratings and tighter tolerance product including ESR may be substituted within the same size at KEMET's option. Voltage substitution will be marked with the higher voltage rating. Substitutions can include better than series.

Downloaded from Arrow.com.

Recommended Voltage Derating Guidelines

Rated Voltage	Working Voltage		Recommended Application Voltage (for maximum reliability)	
	85°C	150°C	85°C	150°C
4	4	2.68	2	1.32
6.3	6.3	4.22	3.15	2.08
10	10	6.70	5	3.30
16	16	10.72	8	5.28
20	20	13.40	10	6.60
25	25	16.75	12.5	8.25
35	35	23.45	17.5	11.55
50	50	33.50	25	16.50

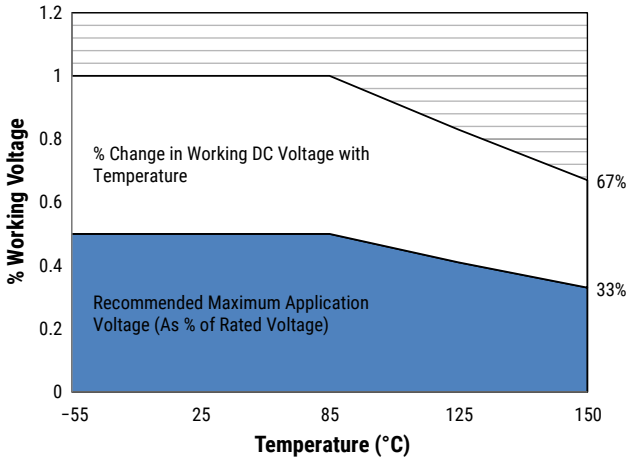

Ripple Current/Ripple Voltage

Permissible AC ripple voltage and current are related to equivalent series resistance (ESR) and the power dissipation capabilities of the device. Permissible AC ripple voltage which may be applied is limited by two criteria:

1. The positive peak AC voltage plus the DC bias voltage, if any, must not exceed the DC voltage rating of the capacitor.
2. The negative peak AC voltage in combination with bias voltage, if any, must not exceed the allowable limits specified for reverse voltage. See the Reverse Voltage section for allowable limits.

The maximum power dissipation by case size can be determined using the table at right. The maximum power dissipation rating stated in the table must be reduced with increasing environmental operating temperatures. Refer to the table below for temperature compensation requirements.

KEMET Series and Case Code	EIA Case Code	Maximum Power Dissipation (P max) mWatts at 25°C with +20°C Rise
A	3216–18	75
B	3528–21	85
C	6032–28	110
D	7343–31	150
X	7343–43	165
E	7360–38	200
S	3216–12	60
T	3528–12	70
U	6032–15	90
V	7343–20	125
T510X	7343–43	270
T510E	7360–38	285

Temperature Compensation Multipliers for Maximum Ripple Current			
T ≤ 25°C	T ≤ 85°C	T ≤ 125°C	T ≤ 150°C
1.00	0.90	0.40	0.30

T= Environmental Temperature

The maximum power dissipation rating must be reduced with increasing environmental operating temperatures. Refer to the Temperature Compensation Multiplier table for details.

Using the P max of the device, the maximum allowable rms ripple current or voltage may be determined.

$I(max) = \sqrt{P\ max/R}$
$E(max) = Z\sqrt{P\ max/R}$

I = rms ripple current (amperes)
E = rms ripple voltage (volts)
P max = maximum power dissipation (watts)
R = ESR at specified frequency (ohms)
Z = Impedance at specified frequency (ohms)

Downloaded from Arrow.com.

Reverse Voltage

Solid tantalum capacitors are polar devices and may be permanently damaged or destroyed if connected with the wrong polarity. The positive terminal is identified on the capacitor body by a stripe plus in some cases a beveled edge. A small degree of transient reverse voltage is permissible for short periods per the table. The capacitors should not be operated continuously in reverse mode, even within these limits.

Temperature	Permissible Transient Reverse Voltage
25°C	15% of Rated Voltage
85°C	5% of Rated Voltage
125°C	1% of Rated Voltage

Table 2 – Land Dimensions/Courtyard

KEMET	Metric Size Code	Density Level A: Maximum (Most) Land Protrusion (mm)					Density Level B: Median (Nominal) Land Protrusion (mm)					Density Level C: Minimum (Least) Land Protrusion (mm)				
Case	EIA	W	L	S	V1	V2	W	L	S	V1	V2	W	L	S	V1	V2
A	3216–18	1.35	2.20	0.62	6.02	2.80	1.23	1.80	0.82	4.92	2.30	1.13	1.42	0.98	4.06	2.04
B	3528–21	2.35	2.21	0.92	6.32	4.00	2.23	1.80	1.12	5.22	3.50	2.13	1.42	1.28	4.36	3.24
C	6032–28	2.35	2.77	2.37	8.92	4.50	2.23	2.37	2.57	7.82	4.00	2.13	1.99	2.73	6.96	3.74
D	7343–31	2.55	2.77	3.67	10.22	5.60	2.43	2.37	3.87	9.12	5.10	2.33	1.99	4.03	8.26	4.84
X[1]	7343–43	2.55	2.77	3.67	10.22	5.60	2.43	2.37	3.87	9.12	5.10	2.33	1.99	4.03	8.26	4.84

Density Level A: *For low-density product applications. Recommended for wave solder applications and provides a wider process window for reflow solder processes.*
Density Level B: *For products with a moderate level of component density. Provides a robust solder attachment condition for reflow solder processes.*
Density Level C: *For high component density product applications. Before adapting the minimum land pattern variations the user should perform qualification testing based on the conditions outlined in IPC standard 7351 (IPC–7351).*

[1] *Height of these chips may create problems in wave soldering.*
[2] *Land pattern geometry is too small for silkscreen outline.*

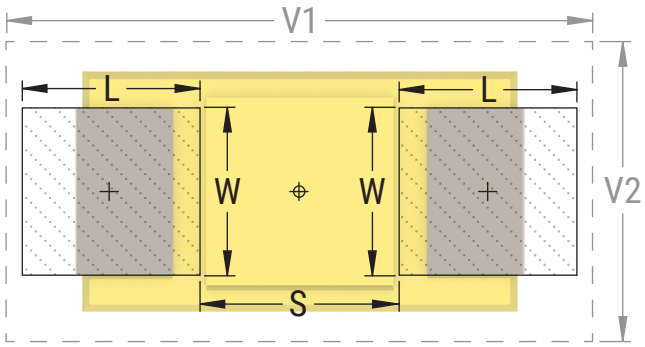

Grid Placement Courtyard

Downloaded from Arrow.com.

Soldering Process

The KEMET families of surface mount capacitors are compatible with wave (single or dual), convection, IR, or vapor phase reflow techniques. Preheating of these components is recommended to avoid extreme thermal stress. KEMET's recommended profile conditions for convection and IR reflow reflect the profile conditions of the IPC/J–STD–020D standard for moisture sensitivity testing. The devices can safely withstand a maximum of three reflow passes at these conditions.

Please note that although the X/7343–43 case size can withstand wave soldering, the tall profile (4.3 mm maximum) dictates care in wave process development.

Hand soldering should be performed with care due to the difficulty in process control. If performed, care should be taken to avoid contact of the soldering iron to the molded case. The iron should be used to heat the solder pad, applying solder between the pad and the termination, until reflow occurs. Once reflow occurs, the iron should be removed immediately. “Wiping” the edges of a chip and heating the top surface is not recommended.

During typical reflow operations, a slight darkening of the gold-colored epoxy may be observed. This slight darkening is normal and not harmful to the product. Marking permanency is not affected by this change.

Profile Feature	SnPb Assembly	Pb-Free Assembly
Preheat/Soak		
Temperature Minimum (T_{Smin})	100°C	150°C
Temperature Maximum (T_{Smax})	150°C	200°C
Time (t_s) from T_{smin} to T_{smax})	60 – 120 seconds	60 – 120 seconds
Ramp-up Rate (T_L to T_P)	3°C/second maximum	3°C/second maximum
Liquidous Temperature (T_L)	183°C	217°C
Time Above Liquidous (t_L)	60 – 150 seconds	60 – 150 seconds
Peak Temperature (T_P)	220°C* 235°C**	250°C* 260°C**
Time within 5°C of Maximum Peak Temperature (t_P)	20 seconds maximum	30 seconds maximum
Ramp-down Rate (T_P to T_L)	6°C/second maximum	6°C/second maximum
Time 25°C to Peak Temperature	6 minutes maximum	8 minutes maximum

Note: All temperatures refer to the center of the package, measured on the package body surface that is facing up during assembly reflow.
** For Case Size height > 2.5 mm*
*** For Case Size height ≤ 2.5 mm*

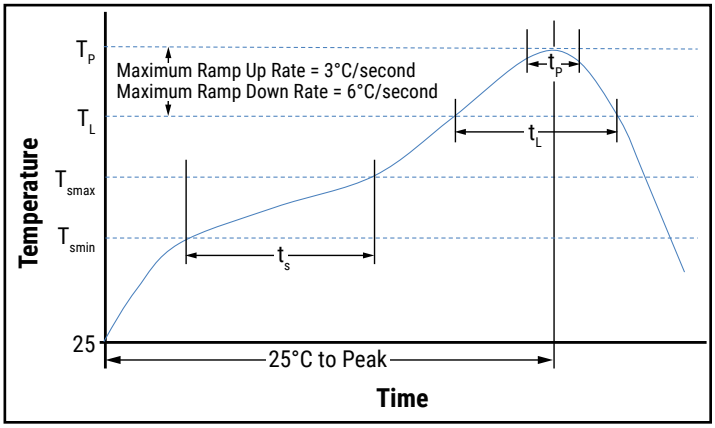

Storage

Tantalum chip capacitors should be stored in normal working environments. While the chips themselves are quite robust in other environments, solderability will be degraded by exposure to high temperatures, high humidity, corrosive atmospheres, and long term storage. In addition, packaging materials will be degraded by high temperature – reels may soften or warp and tape peel force may increase. KEMET recommends that maximum storage temperature not exceed 40°C and maximum storage humidity not exceed 60% relative humidity. Temperature fluctuations should be minimized to avoid condensation on the parts and atmospheres should be free of chlorine and sulphur bearing compounds. For optimized solderability, chip stock should be used promptly, preferably within three years of receipt.

Downloaded from Arrow.com.

Construction

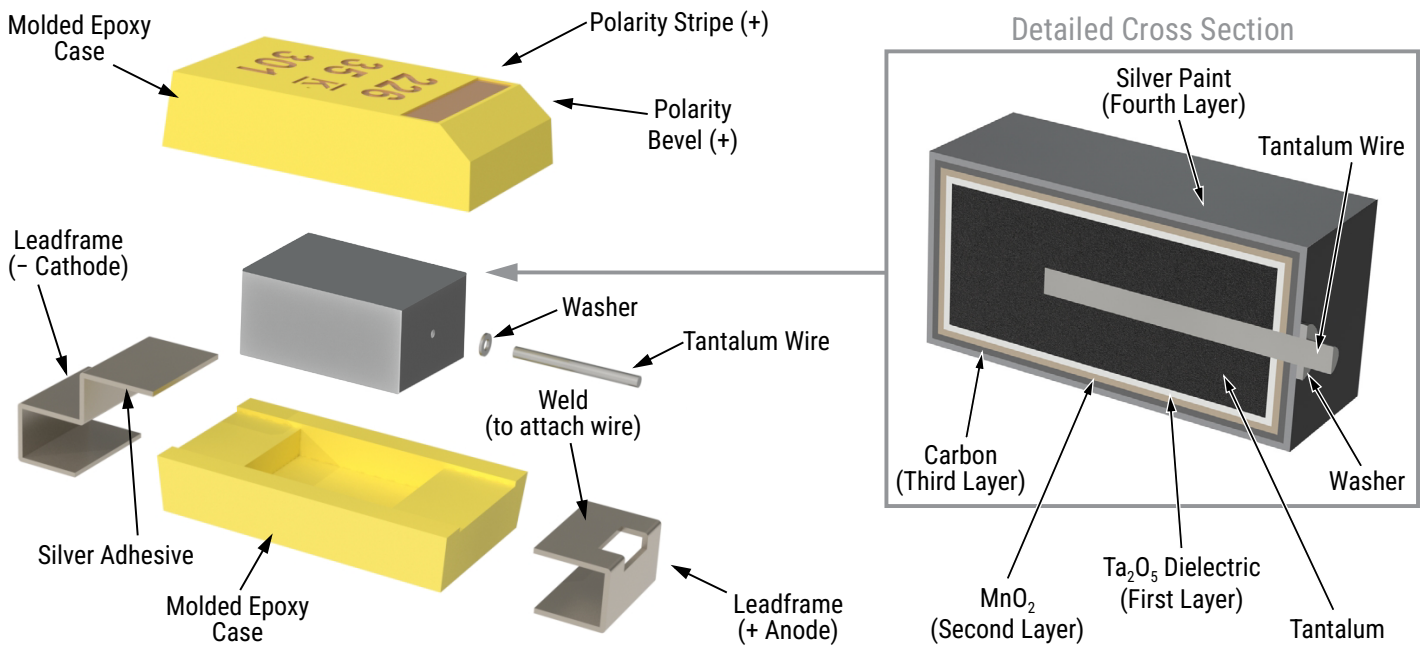

Capacitor Marking

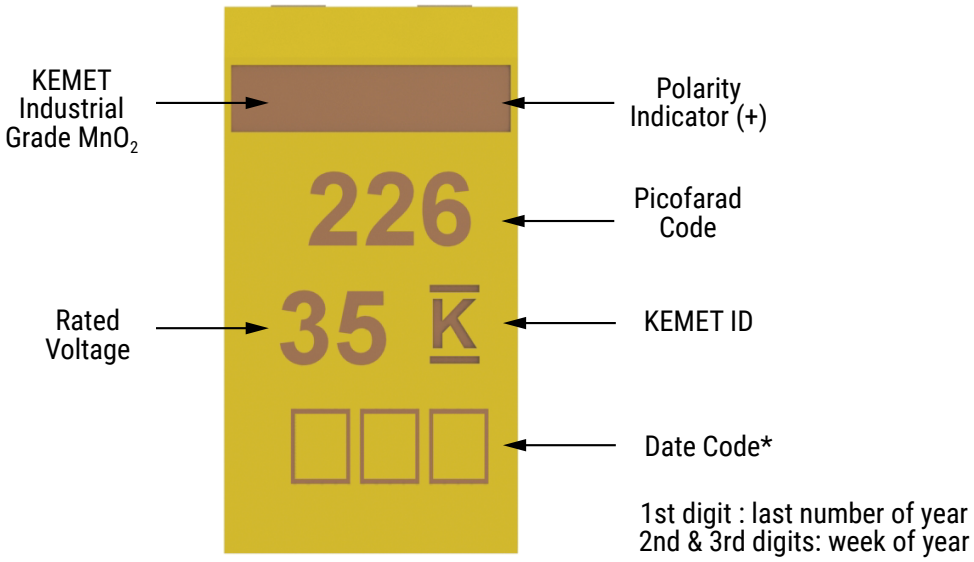

Downloaded from Arrow.com.

Tape & Reel Packaging Information

KEMET's molded chip capacitor families are packaged in 8 and 12 mm plastic tape on 7" and 13" reels in accordance with *EIA Standard 481*: Embossed Carrier Taping of Surface Mount Components for Automatic Handling. This packaging system is compatible with all tape-fed automatic pick-and-place systems.

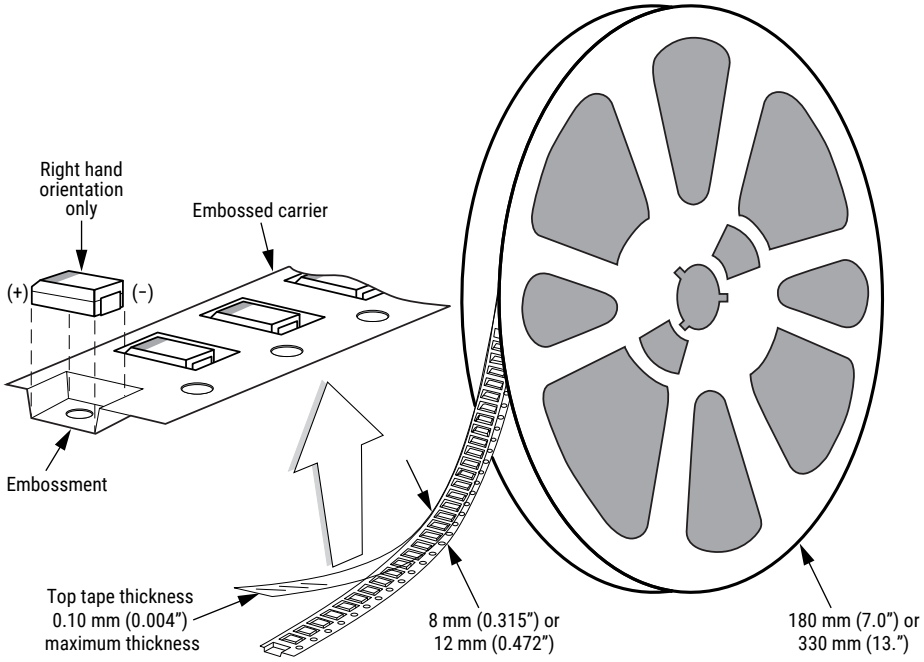

Table 3 – Packaging Quantity

Case Code		Tape Width (mm)	7" Reel*	13" Reel*
KEMET	EIA			
S	3216-12	8	2,500	10,000
T	3528-12	8	2,500	10,000
M	3528-15	8	2,500	8,000
U	6032-15	12	1,000	5,000
L	6032-19	12	1,000	3,000
W	7343-15	12	1,000	3,000
Z	7343-17	12	1,000	3,000
V	7343-20	12	1,000	3,000
A	3216-18	8	2,000	9,000
B	3528-21	8	2,000	8,000
C	6032-28	12	500	3,000
D	7343-31	12	500	2,500
Q	7343-12	12	1,000	3,000
Y	7343-40	12	500	2,000
X	7343-43	12	500	2,000
E/T428P	7360-38	12	500	2,000
H	7360-20	12	1,000	2,500
O	7360-43	12	250	1,000

** No C-Spec required for 7" reel packaging. C-7280 required for 13" reel packaging.*

Downloaded from Arrow.com.

Figure 1 – Embossed (Plastic) Carrier Tape Dimensions

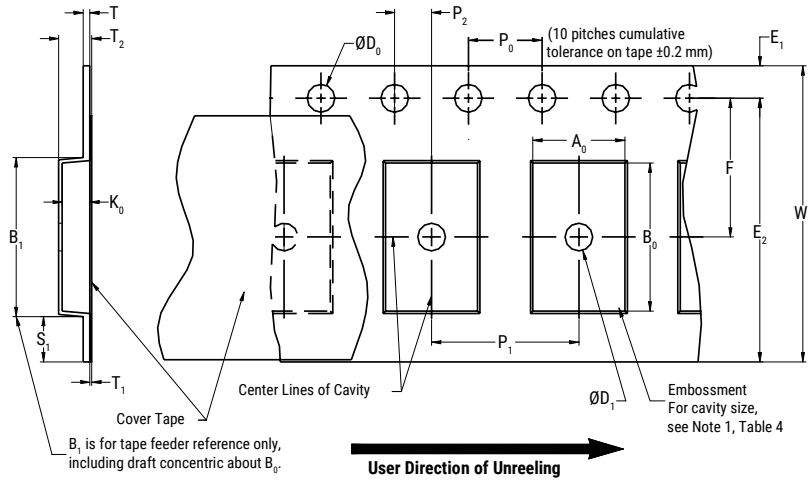

Table 4 – Embossed (Plastic) Carrier Tape Dimensions

Metric will govern

Constant Dimensions — Millimeters (Inches)									
Tape Size	D_0	D_1 Minimum Note 1	E_1	P_0	P_2	R Reference Note 2	S_1 Minimum Note 3	T Maximum	T_1 Maximum
8 mm	1.5 +0.10/−0.0 (0.059 +0.004/−0.0)	1.0 (0.039)	1.75 ±0.10 (0.069 ±0.004)	4.0 ±0.10 (0.157 ±0.004)	2.0 ±0.05 (0.079 ±0.002)	25.0 (0.984)	0.600 (0.024)	0.600 (0.024)	0.100 (0.004)
12 mm		1.5 (0.059)				30 (1.181)			

Variable Dimensions — Millimeters (Inches)								
Tape Size	Pitch	B_1 Maximum Note 4	E_2 Minimum	F	P_1	T_2 Maximum	W Maximum	A_0, B_0 & K_0
8 mm	Single (4 mm)	4.35 (0.171)	6.25 (0.246)	3.5 ±0.05 (0.138 ±0.002)	4.0 ±0.10 (0.157 ±0.004)	2.5 (0.098)	8.3 (0.327)	Note 5
12 mm	Single (4 mm) and Double (8 mm)	8.2 (0.323)	10.25 (0.404)	5.5 ±0.05 (0.217 ±0.002)	4.0 ±0.10 (0.157 ±0.004) or 8.0 ±0.10 (0.315 ±0.004)	4.6 (0.181)	12.3 (0.484)	

1. *The embossment hole location shall be measured from the sprocket hole controlling the location of the embossment. Dimensions of embossment location and hole location shall be applied independent of each other.*
2. *The tape, with or without components, shall pass around R without damage (see Figure 4).*
3. *If S_1 < 1.0 mm, there may not be enough area for cover tape to be properly applied (see EIA Standard 481–D, paragraph 4.3, section b).*
4. *B_1 dimension is a reference dimension for tape feeder clearance only.*
5. *The cavity defined by A_0, B_0 and K_0 shall surround the component with sufficient clearance that:*
   (a) the component does not protrude above the top surface of the carrier tape.
   (b) the component can be removed from the cavity in a vertical direction without mechanical restriction, after the top cover tape has been removed.
   (c) rotation of the component is limited to 20° maximum for 8 and 12 mm tapes (see Figure 2).
   (d) lateral movement of the component is restricted to 0.5 mm maximum for 8 mm and 12 mm wide tape (see Figure 3).
   (e) see Addendum in EIA Standard 481–D for standards relating to more precise taping requirements.

Downloaded from Arrow.com.

Packaging Information Performance Notes

1. Cover tape break force: 1.0 kg minimum.
2. Cover tape peel strength: The total peel strength of the cover tape from the carrier tape shall be:

Tape Width	Peel Strength
8 mm	0.1 to 1.0 newton (10 to 100 gf)
12 mm	0.1 to 1.3 newton (10 to 130 gf)

The direction of the pull shall be opposite the direction of the carrier tape travel. The pull angle of the carrier tape shall be 165° to 180° from the plane of the carrier tape. During peeling, the carrier and/or cover tape shall be pulled at a velocity of 300 ±10 mm/minute.
3. Labeling: Bar code labeling (standard or custom) shall be on the side of the reel opposite the sprocket holes. *Refer to EIA Standards 556 and 624*.

Figure 2 – Maximum Component Rotation

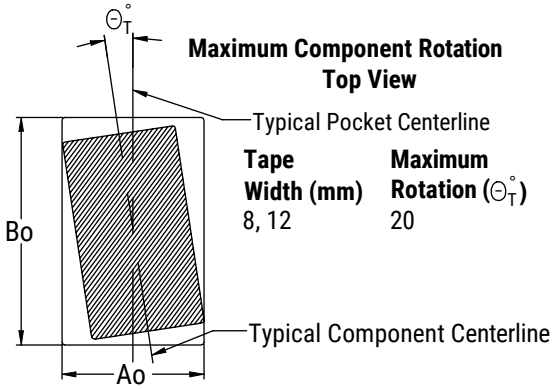

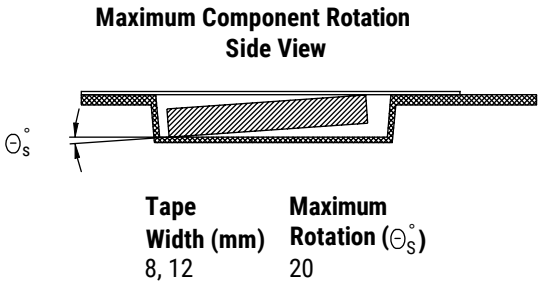

Figure 3 – Maximum Lateral Movement

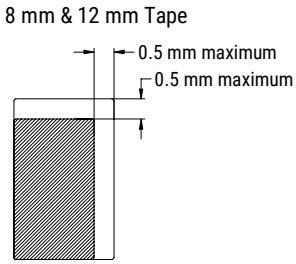

Figure 4 – Bending Radius

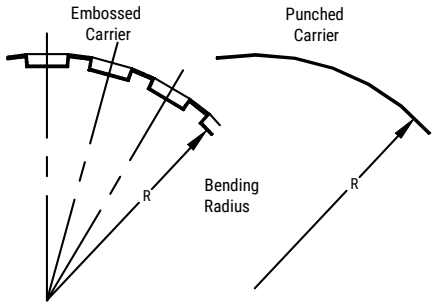

Downloaded from Arrow.com.

Figure 5 – Reel Dimensions

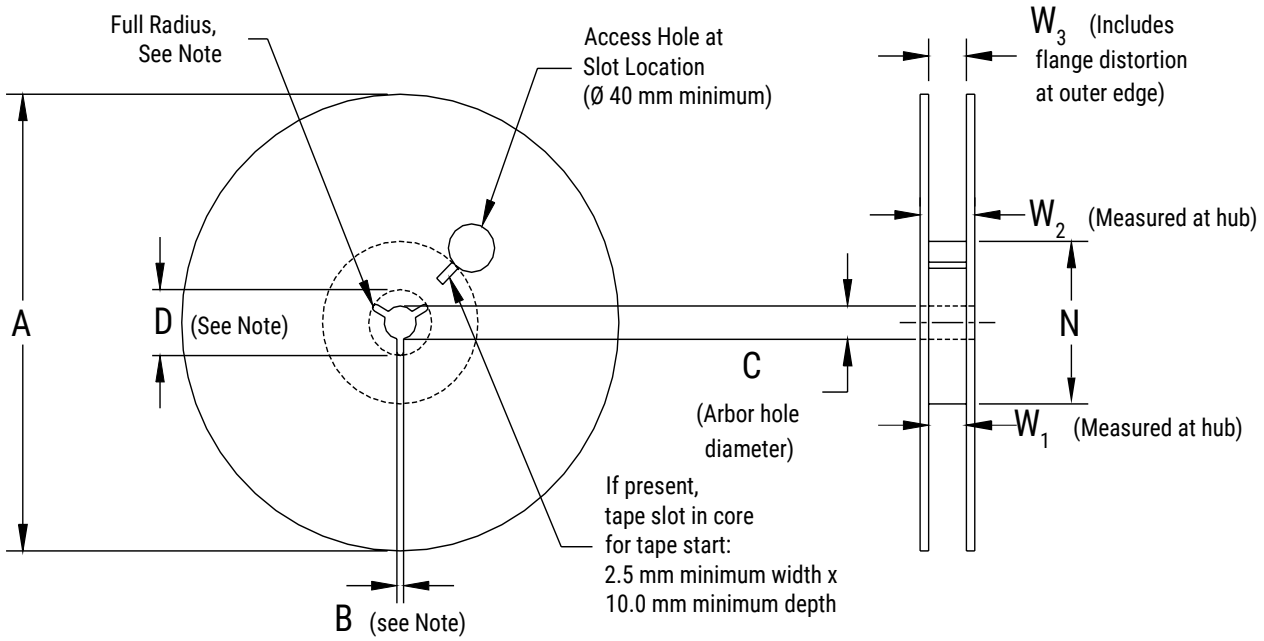

Note: Drive spokes optional; if used, dimensions B and D shall apply.

Table 5 – Reel Dimensions

Metric will govern

Constant Dimensions — Millimeters (Inches)				
Tape Size	A	B Minimum	C	D Minimum
8 mm	178 ±0.20 (7.008 ±0.008) or 330 ±0.20 (13.000 ±0.008)	1.5 (0.059)	13.0 +0.5/−0.2 (0.521 +0.02/−0.008)	20.2 (0.795)
12 mm				

Variable Dimensions — Millimeters (Inches)				
Tape Size	N Minimum	W_1	W_2 Maximum	W_3
8 mm	50 (1.969)	8.4 +1.5/−0.0 (0.331 +0.059/−0.0)	14.4 (0.567)	Shall accommodate tape width without interference
12 mm		12.4 +2.0/−0.0 (0.488 +0.078/−0.0)	18.4 (0.724)	

Downloaded from Arrow.com.

Figure 6 – Tape Leader & Trailer Dimensions

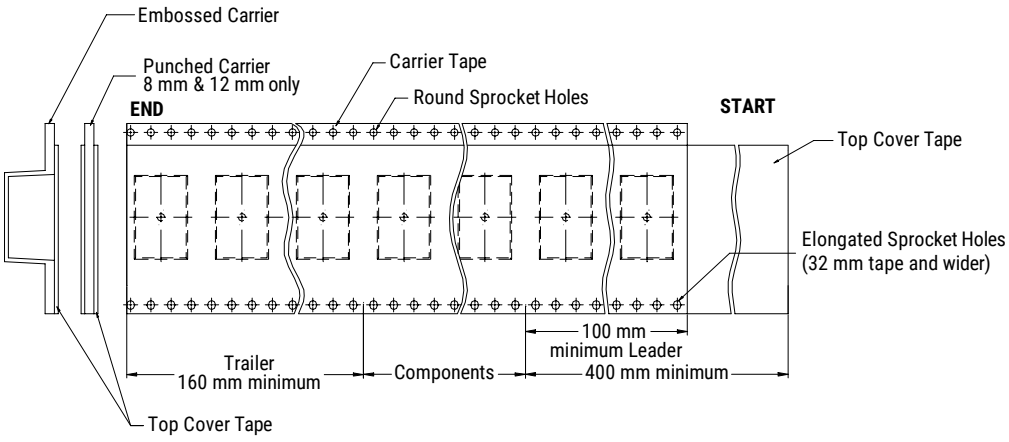

Figure 7 – Maximum Camber

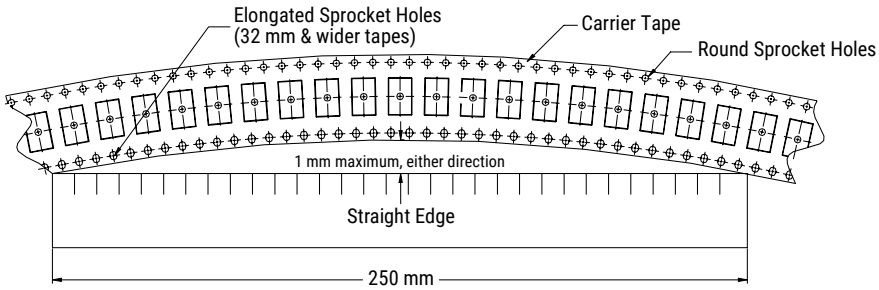

Downloaded from Arrow.com.

KEMET Electronics Corporation Sales Offices

For a complete list of our global sales offices, please visit https://www.yageogroup.com/SalesResources/SalesOffices

Disclaimer

YAGEO Corporation and its affiliates do not recommend the use of commercial or automotive grade products for high reliability applications or manned space flight.

All product specifications, statements, information and data (collectively, the "Information") in this datasheet are subject to change. The customer is responsible for checking and verifying the extent to which the Information contained in this publication is applicable to an order at the time the order is placed. All Information given herein is believed to be accurate and reliable, but it is presented without guarantee, warranty, or responsibility of any kind, expressed or implied.

Statements of suitability for certain applications are based on KEMET Electronics Corporation's ("KEMET") knowledge of typical operating conditions for such applications, but are not intended to constitute – and KEMET specifically disclaims – any warranty concerning suitability for a specific customer application or use. The Information is intended for use only by customers who have the requisite experience and capability to determine the correct products for their application. Any technical advice inferred from this Information or otherwise provided by KEMET with reference to the use of KEMET's products is given gratis, and KEMET assumes no obligation or liability for the advice given or results obtained.

Although KEMET designs and manufactures its products to the most stringent quality and safety standards, given the current state of the art, isolated component failures may still occur. Accordingly, customer applications which require a high degree of reliability or safety should employ suitable designs or other safeguards (such as installation of protective circuitry or redundancies) in order to ensure that the failure of an electrical component does not result in a risk of personal injury or property damage.

Although all product–related warnings, cautions and notes must be observed, the customer should not assume that all safety measures are indicated or that other measures may not be required.

KEMET is a registered trademark of KEMET Electronics Corporation.

Downloaded from Arrow.com.