© 2019 TE Connectivity. All Rights Reserved.

| REVISIONS 変更 | | | | | |
|---|---|---|---|---|---|
| P | LTR | DESCRIPTION | DATE | DWN | APVD |
| | A3 | REVISED ECR-20-004890 | 09APR2020 | DT | RK |
| | A4 | REVISED ECR-21-118871 | 21OCT2021 | RK | KK |
| | A5 | REVISED ECR-22-148286 | 03AUG2022 | AY | HH |
| | A6 | REVISED ECR-23-163668 | 16JAN2023 | AY | HH |

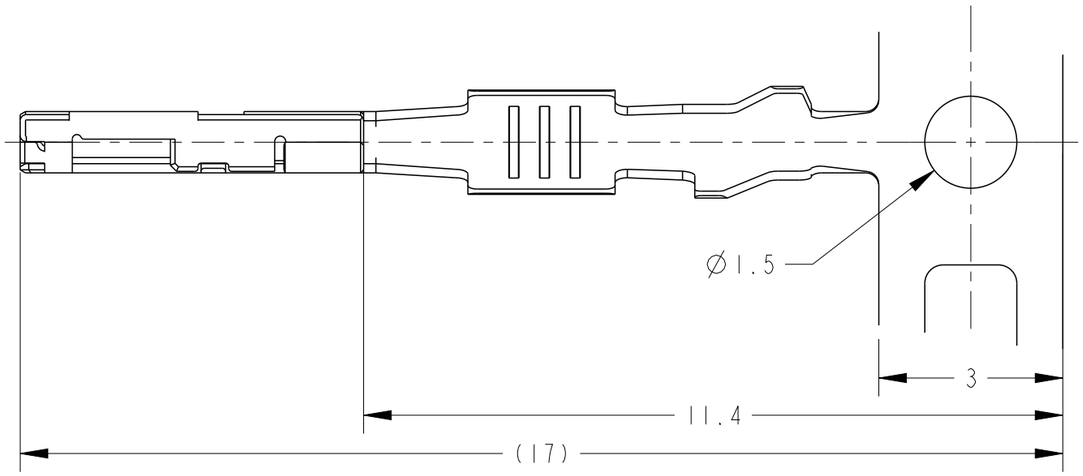


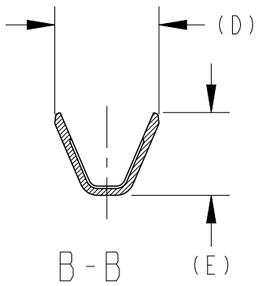


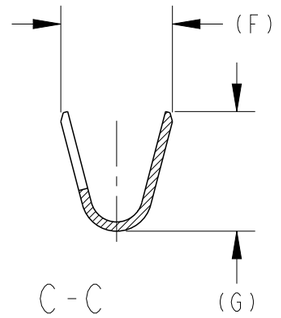


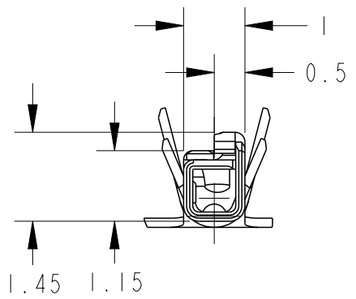


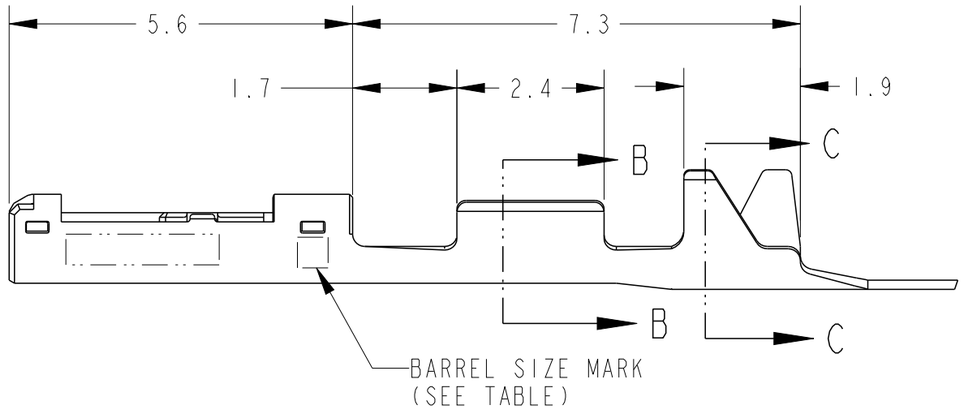


1. 適用電線タイプ；TABLE-1参照
2. 圧着作業については、下記の規格を参照すること
   取付適用規格；114-5379
3. アプリケータ送りピッチ；7mm

1. APPLICABLE WIRE TYPE;SEE TABLE-1
2. MUST BE REFERRED TO THE FOLLOWING DOCUMENTS FOR CRIMPING OPERATION
   APPLICATION SPEC;114-5379
3. APPLICATOR FEED;7mm

TABLE-1

| APPLICABLE WIRE TYPE | INS RANGE | WIRE RANGE | G | F | E | D | BARREL SIZE MARK | NAME | PART NO |
|---|---|---|---|---|---|---|---|---|---|
| CHFUS/CIVUS | ∅0.85~0.95 | 0.13~0.22mm² | 1.74 | 1.82 | 1.26 | 1.7 | S | 0.50 REC (S) | 1827855-4 |
| CPEX | ∅1.3~1.5 | 0.22mm² | 2.45 | 2.1 | 1.35 | 1.7 | C | 0.50 REC (C) | 1827855-3 |
| CHFUS/CIVUS | ∅1.1~1.4 | 0.35~0.5mm² | 2.45 | 2.1 | 1.7 | 1.8 | L | 0.50 REC (L) | 1827855-2 |
| CHFUS/CIVUS | ∅0.95~1.2 | 0.22~0.35mm² | 1.95 | 1.82 | 1.35 | 1.7 | M | 0.50 REC (M) | 1827855-1 |

THIS DRAWING IS A CONTROLLED DOCUMENT.

DIMENSIONS: 単位： 粍 mm

TOLERANCES UNLESS OTHERWISE SPECIFIED:
一般公差 ±0.3
0 PLC ±1
1 PLC ±0.3
2 PLC ±0.10
3 PLC ±0.001
4 PLC ±0.0001
ANGLES ±3° 00′

MATERIAL 材料: COPPER ALLOY

FINISH 仕上: PRE-TIN

DWN Y.SUEMITSU 25APR2005
CHK K.SAKAMAKI 25APR2005
APVD S.ISOHATA 25APR2005
PRODUCT SPEC 製品規格: 108-78208
APPLICATION SPEC 取付適用規格: 114-5379
WEIGHT: 0.06 g

TE Connectivity

NAME 名称: RECEPTACLE CONTACT, CRIMP TYPE, 0.50 SERIES

| SIZE | CAGE CODE | DRAWING NO 番号 | RESTRICTED TO |
|---|---|---|---|
| A3 | 00779 | C-1827855 | - |

CUSTOMER DRAWING | SCALE 尺度 10:1 | SHEET 1 OF 1 | REV A6



Downloaded from Arrow.com.