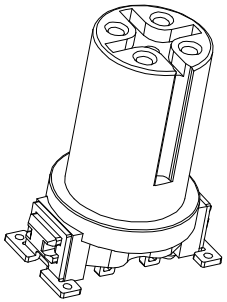

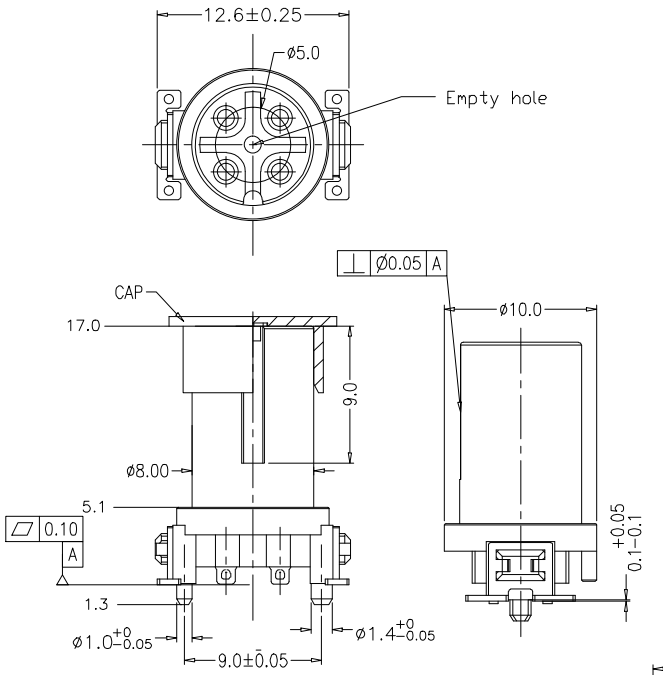

Notes:

Insulator Material:	High temperature, UL94V-0,Black;
Contact Material:	Copper Alloy ;
Contact Plating:	Gold Flash over Nickel
Current Rating:	4.0A;
Voltage Rating:	250V ;
Insulation Resistance:	100MΩ Min;
Contact Resistance:	10mΩ Max;
Processing Temperature:	255°C for 5 seconds Max;
Operating Temperature :	-25°C ~ +85°C
Mechanical Characteristics:	100 cycle Min
Packing:	Tape&Reel

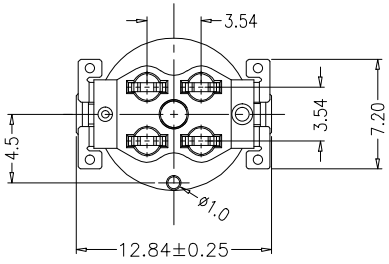

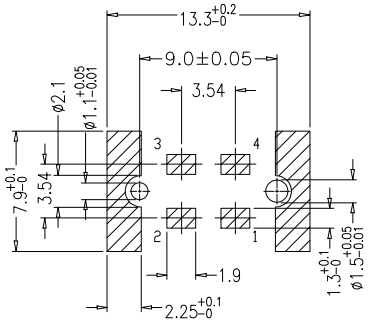

RECOMMENDED PCB LAYOUT

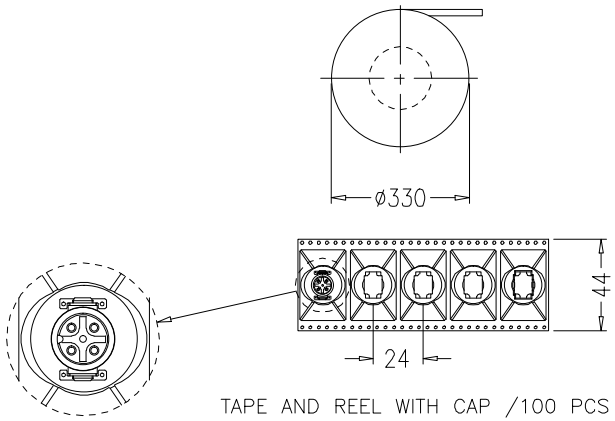

TAPE AND REEL WITH CAP /100 PCS

RoHS compliant

Unit:mm

Scale	Free
TOLERANCE	
.X	±0.15
.XX	±0.10
DIM	TOL
X°	±1°
Angle	TOL

Id.	Modification	Date	Name
②	Update gender description Add other connectors of 4Pin &12Pin	19.07.2022	Luca
①	Add the 8pins connectors	13.07.2022	Segal
⓪	Drawn	17.03.2021	Winnie

	Date	Name
Drawn	17.03.2021	Winnie
Approved	19.07.2021	Luca

ASSMANN WSW components

Description: Circular Connector

M12 A-code Female 4pin

ASSMANN WSW-No.

A-M12-04-FGPA-GSR01

Drawing-No.

ASS 8870 CO

rev02

Customer-No.

SHEET 1 / 7

SV5037

Downloaded from Arrow.com.

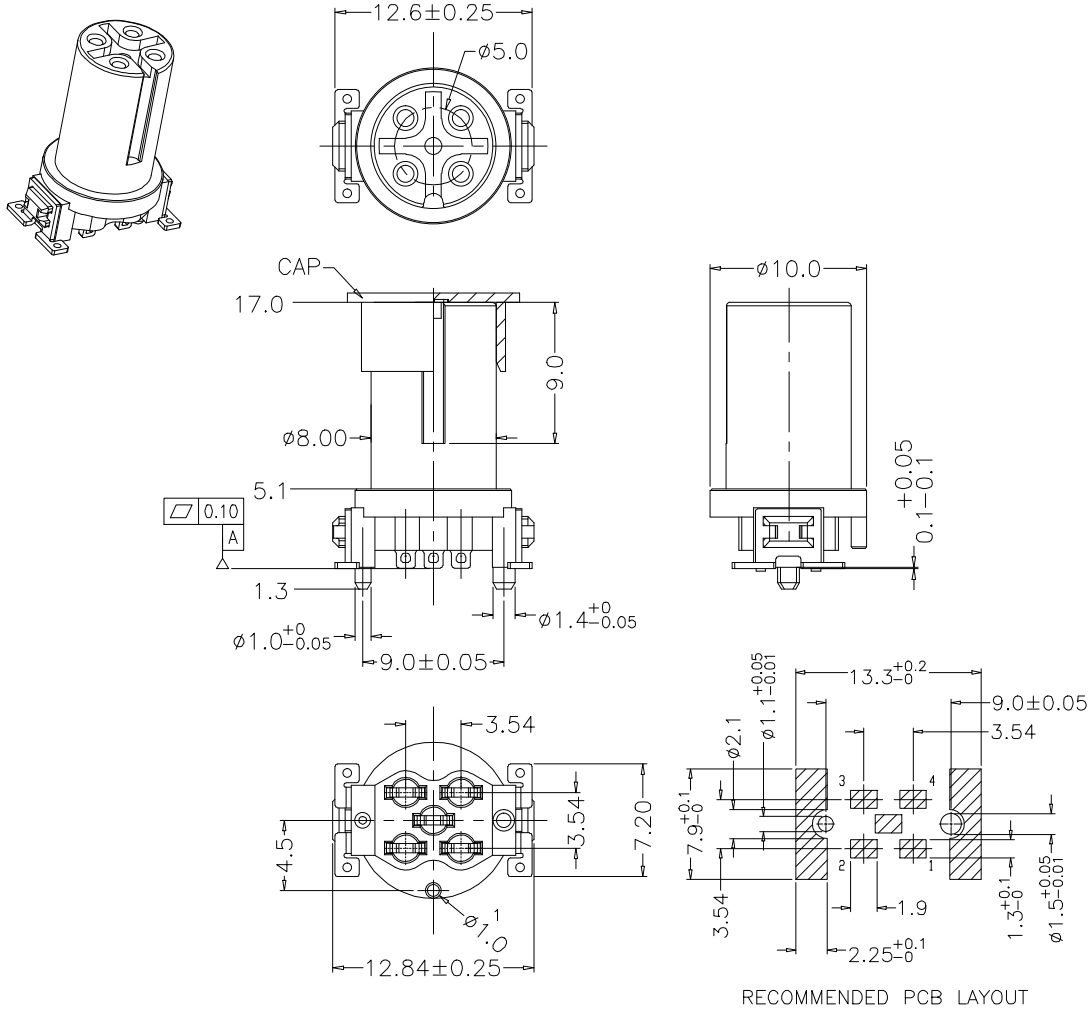

Notes:

Insulator Material:	High temperature, UL94V-0,Black;
Contact Material:	Copper Alloy ;
Contact Plating:	Gold Flash over Nickel
Current Rating:	4.0A;
Voltage Rating:	60V ;
Insulation Resistance:	100MΩ Min;
Contact Resistance:	10mΩ Max;
Processing Temperature:	255°C for 5 seconds Max;
Operating Temperature :	-25°C ~ +85°C
Mechanical Characteristics:	100 cycle Min
Packing:	Tape&Reel

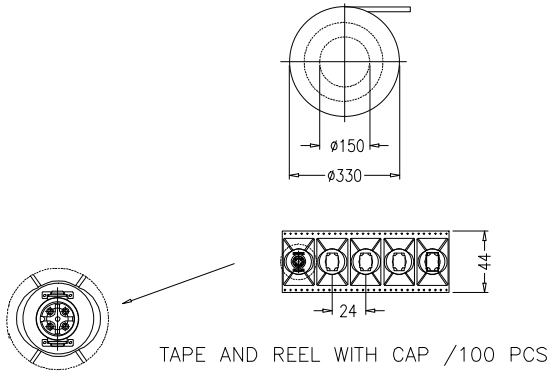

RoHS compliant

Unit:mm

Scale	Free
TOLERANCE	
.X	±0.15
.XX	±0.10
DIM	TOL
X°	±1°
Angle	TOL

Id.	Modification	Date	Name
②	Update gender description Add other connectors of 4Pin &12Pin	13.07.2022	Luca
①	Add the 8pins connectors	13.07.2022	Segal
⓪	Drawn	17.03.2021	Winnie

	Date	Name
Drawn	17.03.2021	Winnie
Approved	19.07.2021	Luca

ASSMANN WSW components

Description: Circular Connector

M12 A-code Female 5pin

ASSMANN WSW-No.

A-M12-05-FGPA-GSR01

Drawing-No. ASS 8870 CO

rev02

Customer-No.

SHEET 2 / 7

SV5037

Downloaded from Arrow.com.

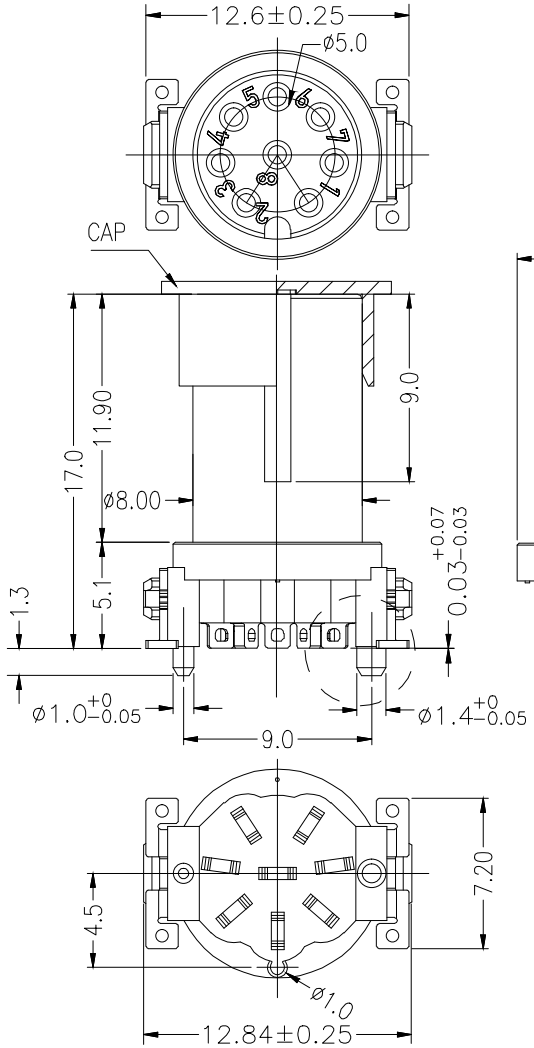

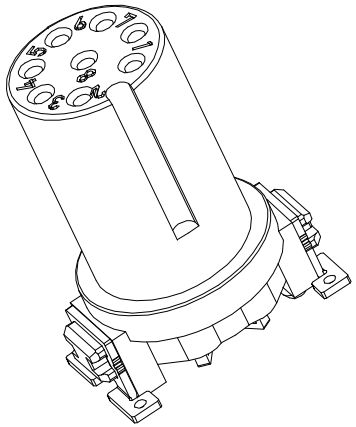

Notes:

Insulator Material:	High temperature, UL94V-0,Black;
Contact Material:	Copper Alloy ;
Contact Plating:	Gold Flash over Nickel
Current Rating:	2.0A;
Voltage Rating:	30V;
Insulation Resistance:	100MΩ Min;
Contact Resistance:	10mΩ Max;
Processing Temperature:	255°C for 5 seconds Max;
Operating Temperature :	-25°C ~ +85°C
Mechanical Characteristics:	100 cycle Min
Packing:	Tape&Reel

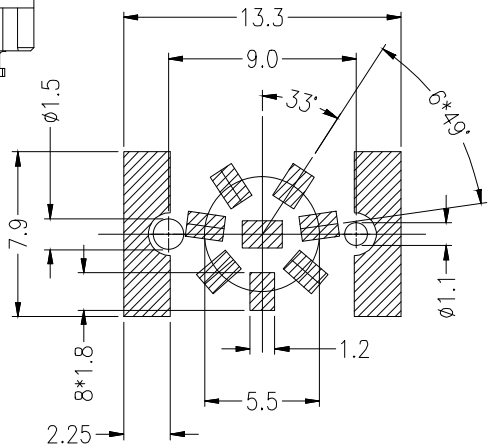

RECOMMENDED PCB LAYOUT

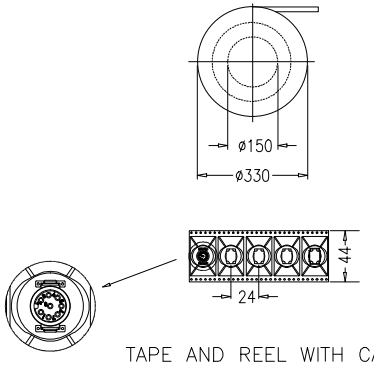

TAPE AND REEL WITH CAP /100 PCS

RoHS compliant

Unit:mm

Scale	Free
TOLERANCE	
.X	±0.15
.XX	±0.10
DIM	TOL
X°	±1°
Angle	TOL

Id.	Modification	Date	Name
②	Update gender description Add other connectors of 4Pin &12Pin	19.07.2022	Luca
①	Add the 8pins connectors	13.07.2022	Segal
⓪	Drawn	17.03.2021	Winnie

	Date	Name
Drawn	17.03.2021	Winnie
Approved	19.07.2021	Luca

ASSMANN WSW components

Description: Circular Connector

M12 A-code Female 8pin

ASSMANN WSW-No.

A-M12-08-FGPA-GSR01

Drawing-No.

ASS 8870 CO

rev02

Customer-No.

SHEET 3 / 7

SV5037

Downloaded from Arrow.com.

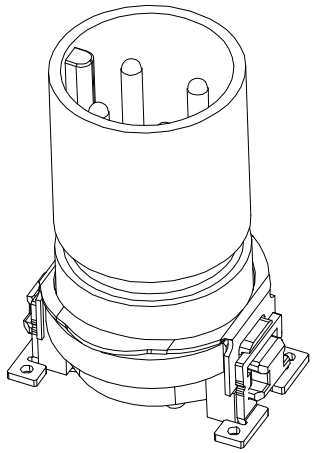

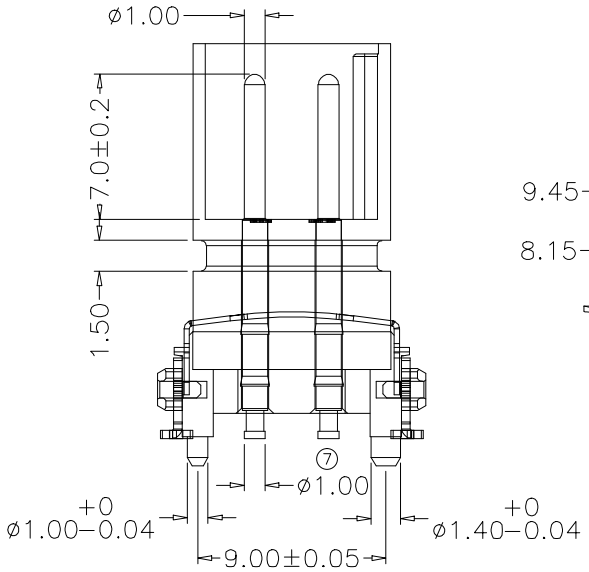

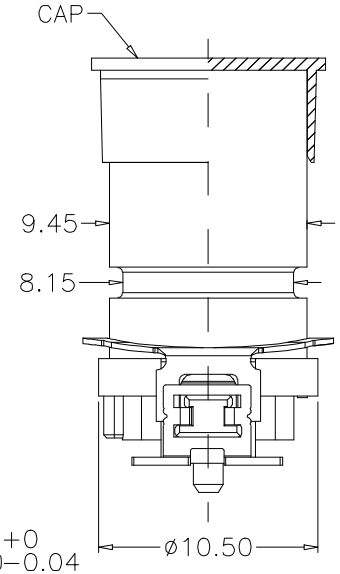

Notes:

Insulator Material:	High temperature, UL94V-0,Black;
Contact Material:	Copper Alloy ;
Contact Plating:	Gold Flash over Nickel
Current Rating:	4.0A;
Voltage Rating:	250V;
Insulation Resistance:	100MΩ Min;
Contact Resistance:	10mΩ Max;
Processing Temperature:	255°C for 5 seconds Max;
Operating Temperature :	-25°C ~ +85°C
Mechanical Characteristics:	100 cycle Min
Packing:	Tape&Reel

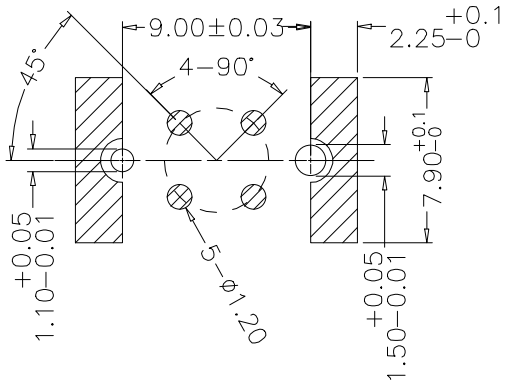

RECOMMENDED PCB LAYOUT

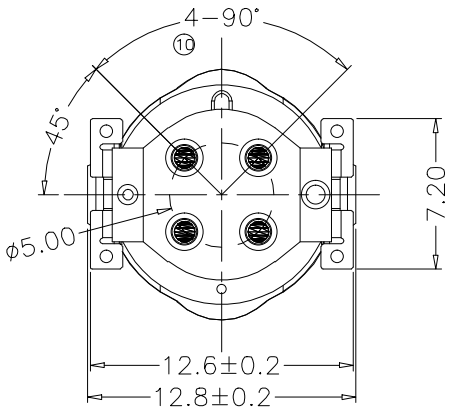

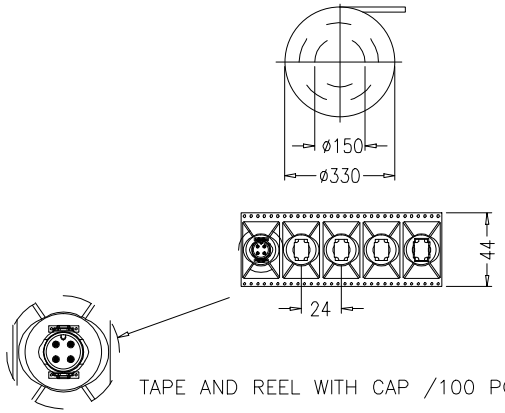

TAPE AND REEL WITH CAP /100 PCS

RoHS compliant

Unit:mm

Scale	Free
TOLERANCE	
.X	±0.15
.XX	±0.10
DIM	TOL
X°	±1°
Angle	TOL

Id.	Modification	Date	Name
②	Update gender description Add other connectors of 4Pin &12Pin	19.07.2022	Luca
①	Add the 8pins connectors	13.07.2022	Segal
⓪	Drawn	17.03.2021	Winnie

	Date	Name
Drawn	17.03.2021	Winnie
Approved	19.07.2021	Luca

ASSMANN WSW components

Description: Circular Connector

M12 A-code Male 4pin

ASSMANN WSW-No.

A-M12-04-MGPA-GSR01

Drawing-No. ASS 8870 CO

rev02

Customer-No.

SHEET 4 / 7

SV5037

Downloaded from Arrow.com.

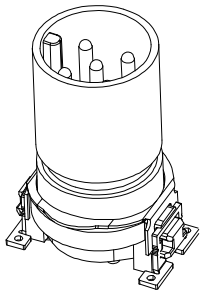

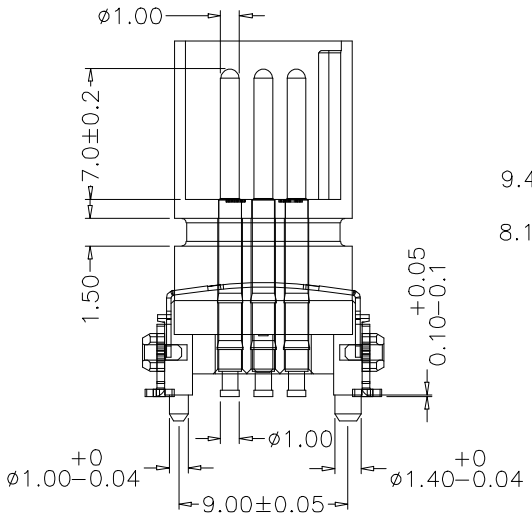

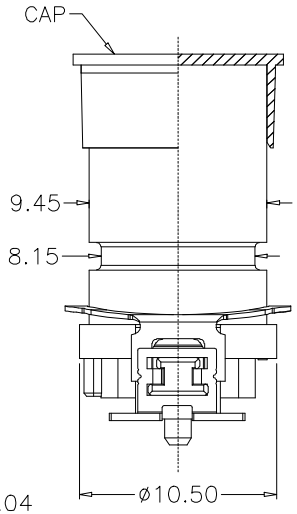

Notes:

Insulator Material:	High temperature, UL94V-0,Black;
Contact Material:	Copper Alloy ;
Contact Plating:	Gold Flash over Nickel
Current Rating:	4.0A;
Voltage Rating:	60V;
Insulation Resistance:	100MΩ Min;
Contact Resistance:	10mΩ Max;
Processing Temperature:	255°C for 5 seconds Max;
Operating Temperature :	-25°C ~ +85°C
Mechanical Characteristics:	100 cycle Min
Packing:	Tape&Reel

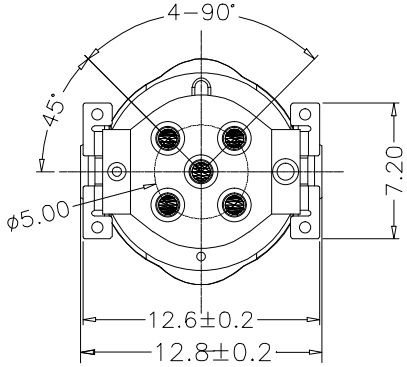

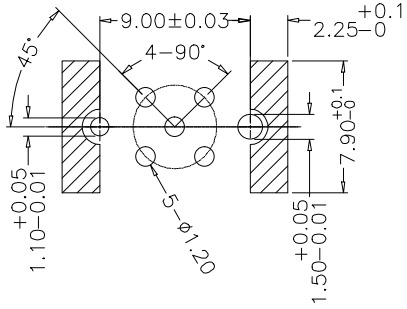

RECOMMENDED PCB LAYOUT

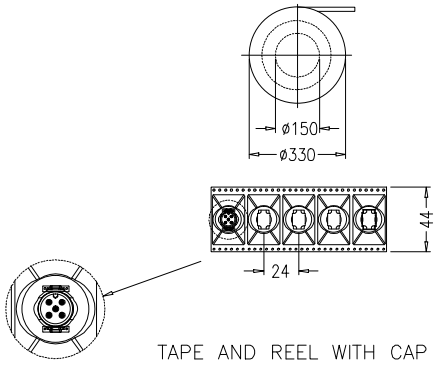

TAPE AND REEL WITH CAP /100 PCS

RoHS compliant

Unit:mm

Scale	Free
TOLERANCE	
.X	±0.15
.XX	±0.10
DIM	TOL
X°	±1°
Angle	TOL

Id.	Modification	Date	Name
②	Update gender description Add other connectors of 4Pin &12Pin	19.07.2022	Luca
①	Add the 8pins connectors	13.07.2022	Segal
⓪	Drawn	17.03.2021	Winnie

	Date	Name
Drawn	17.03.2021	Winnie
Approved	19.07.2021	Luca

ASSMANN WSW components

Description: Circular Connector

M12 A-code Male 5pin

ASSMANN WSW-No.

A-M12-05-MGPA-GSR01

Drawing-No.

ASS 8870 CO

rev02

Customer-No.

SHEET 5 / 7

SV5037

Downloaded from Arrow.com.

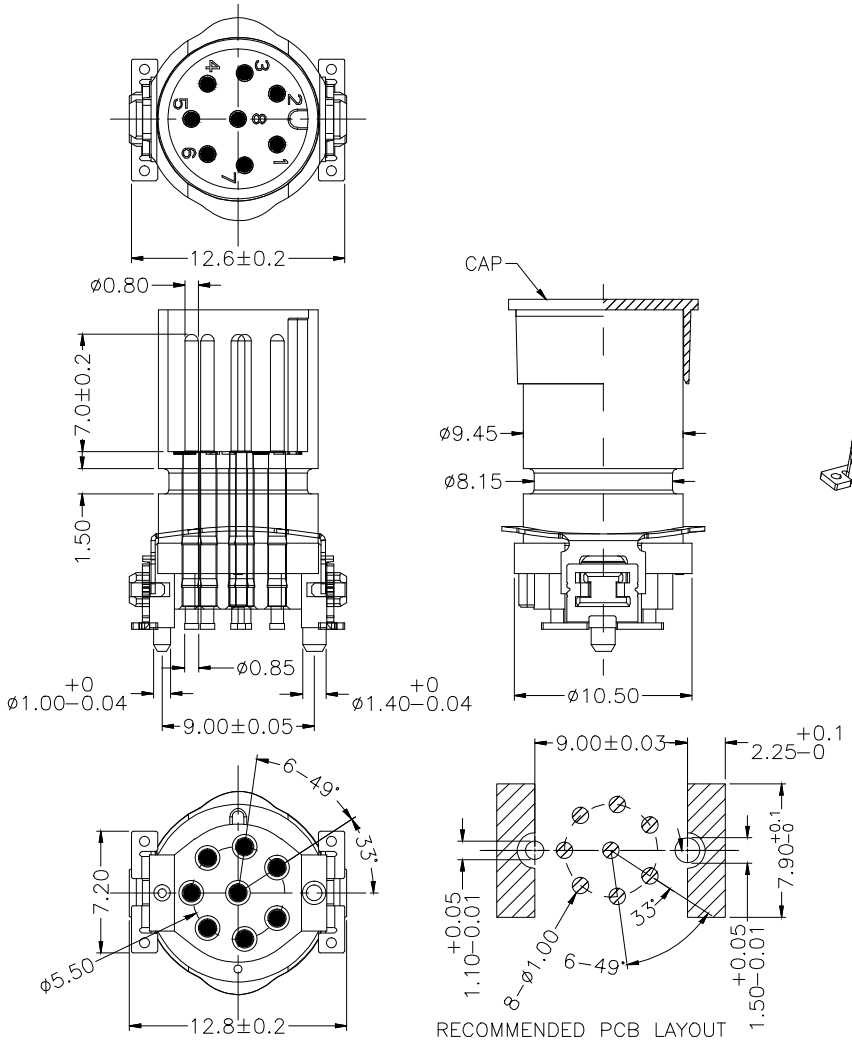

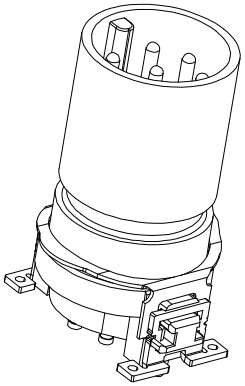

Notes:

Insulator Material:	High temperature, UL94V-0,Black;
Contact Material:	Copper Alloy ;
Contact Plating:	Gold Flash over Nickel
Current Rating:	2.0A;
Voltage Rating:	30V;
Insulation Resistance:	100MΩ Min;
Contact Resistance:	10mΩ Max;
Processing Temperature:	255°C for 5 seconds Max;
Operating Temperature :	-25°C ~ +85°C
Mechanical Characteristics:	100 cycle Min
Packing:	Tape&Reel

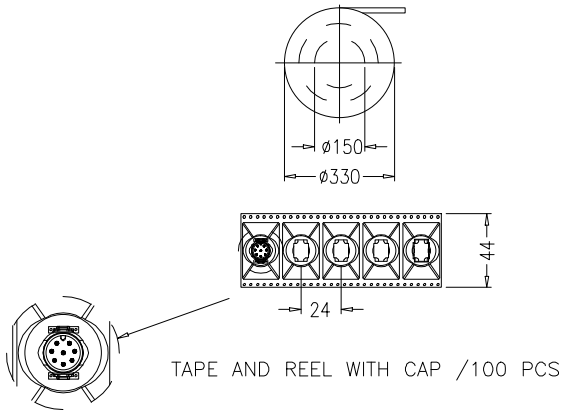

RoHS compliant

Unit:mm

Scale	Free
TOLERANCE	
.X	±0.15
.XX	±0.10
DIM	TOL
X°	±1°
Angle	TOL

Id.	Modification	Date	Name
②	Update gender description Add other connectors of 4Pin &12Pin	19.07.2022	Luca
①	Add the 8pins connectors	13.07.2022	Segal
⓪	Drawn	17.03.2021	Winnie

	Date	Name
Drawn	17.03.2021	Winnie
Approved	19.07.2021	Luca

ASSMANN WSW components

Description: Circular Connector

M12 A-code Male 8pin

ASSMANN WSW-No.

A-M12-08-MGPA-GSR01

Drawing-No.

ASS 8870 CO

rev02

Customer-No.

SHEET 6 / 7

SV5037

Downloaded from Arrow.com.

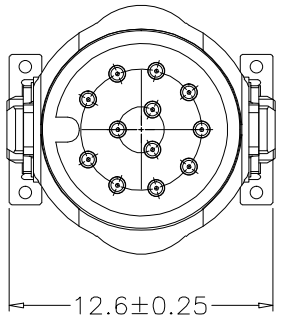

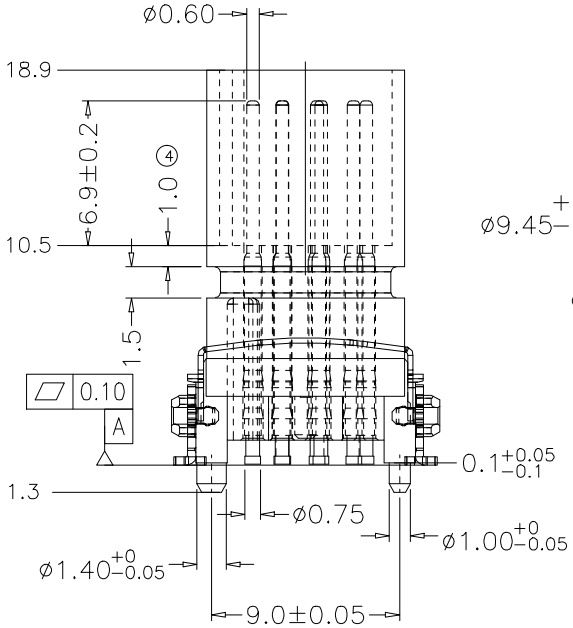

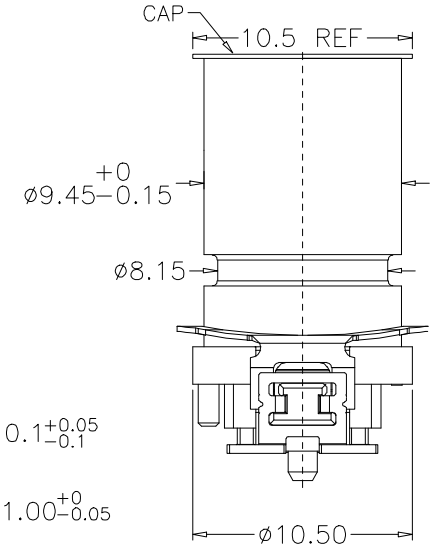

Notes:

Insulator Material:	High temperature, UL94V-0,Black;
Contact Material:	Copper Alloy ;
Contact Plating:	Gold Flash over Nickel
Current Rating:	1.5A;
Voltage Rating:	30V;
Insulation Resistance:	100MΩ Min;
Contact Resistance:	10mΩ Max;
Processing Temperature:	255°C for 5 seconds Max;
Operating Temperature :	-25°C ~ +85°C
Mechanical Characteristics:	100 cycle Min
Packing:	Tape&Reel

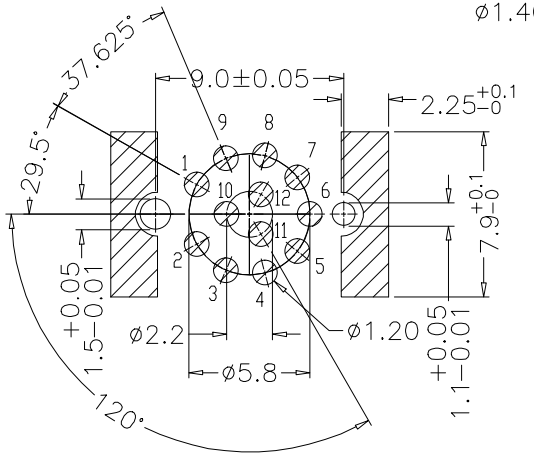

RECOMMENDED PCB LAYOUT

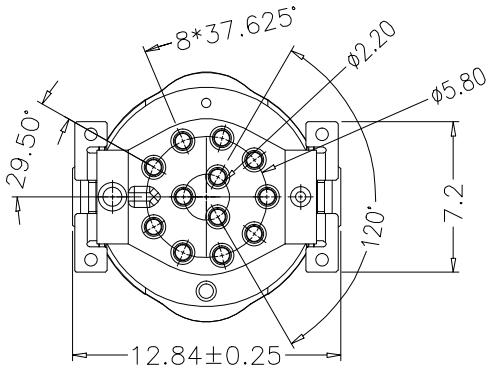

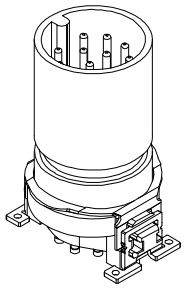

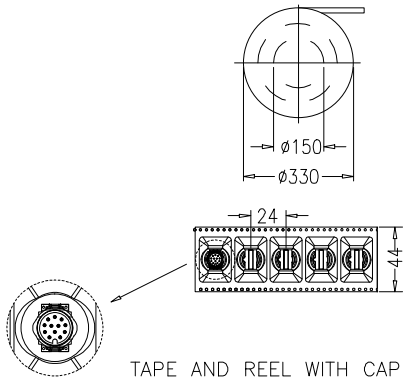

TAPE AND REEL WITH CAP /100 PCS

RoHS compliant

Unit:mm

Scale	Free
TOLERANCE	
.X	±0.15
.XX	±0.10
DIM	TOL
X°	±1°
Angle	TOL

Id.	Modification	Date	Name
②	Update gender description Add other connectors of 4Pin &12Pin	19.07.2022	Luca
①	Add the 8pins connectors	13.07.2022	Segal
⓪	Drawn	17.03.2021	Winnie

	Date	Name
Drawn	17.03.2021	Winnie
Approved	19.07.2021	Luca

ASSMANN WSW components

Description: Circular Connector

M12 A-code Male 12pin

ASSMANN WSW-No.

A-M12-12-MGPA-GSR01

Drawing-No.

ASS 8870 CO

rev02

Customer-No.

SHEET 7 / 7

SV5037

Downloaded from Arrow.com.