Alle Rechte vorbehalten/ *All rights reserved*

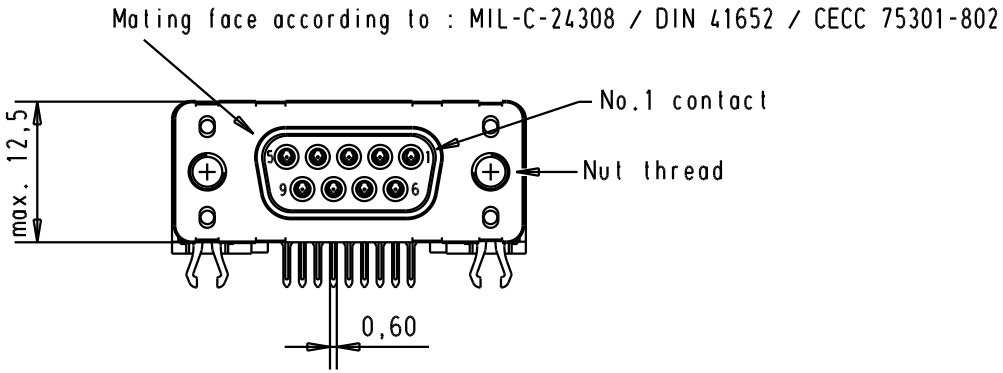

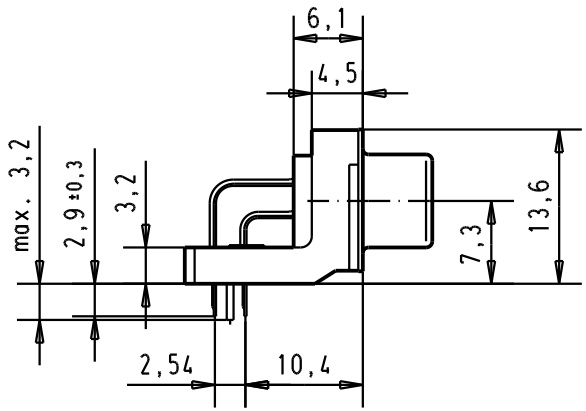

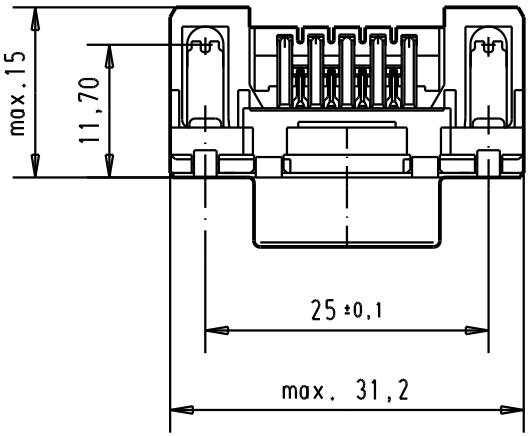

Printed board layout
component side

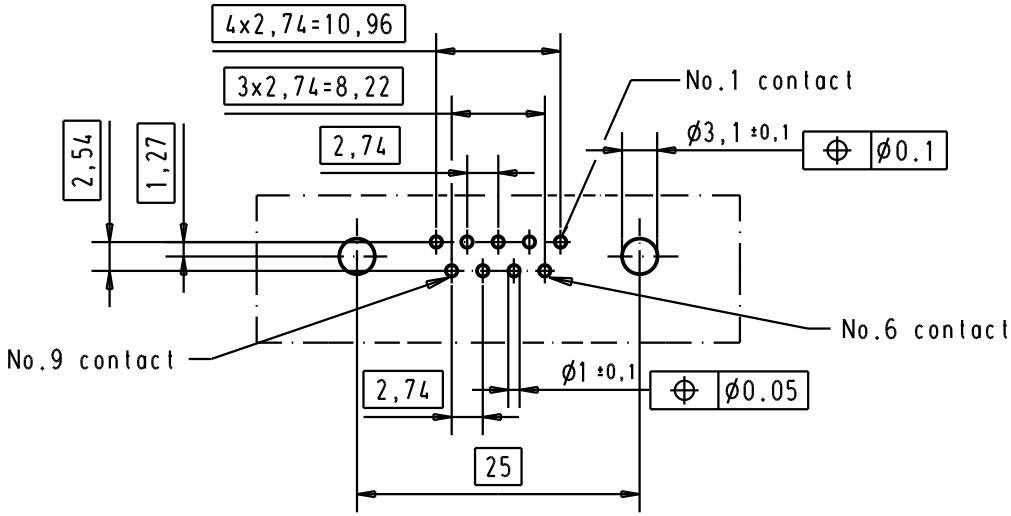

Connector retention and insertion forces on the PCB = 25 / 80 newtons

Part number	Nut thread	Performance level	Mod.	Dat.	Name
09 66 156 3611	M 3	1			
09 66 156 6611	M 3	2			
09 66 156 7611	M 3	3			
09 66 156 3612	4-40 UNC	1	31892	05/05/04	JH
09 66 156 6612	4-40 UNC	2	29723	05-MAR-02	CV
09 66 156 7612	4-40 UNC	3	27969	18/jan/01	jfb

	Dat.	Name
Detail.	18/jan/00	jfb
Insp.		
Stand.		

All Dim. in mm
Orig. Size DIN A 4

D-Sub, high temperature, female, standard, 9 poles with solder pins 2.9, nuts and grounding board lock.

Maßstab/ *Scale* 1.5:1

HARTING EURL
F-95972 Paris

TB 0966156x61x

Sub.

Blatt/ *Page* 5

Downloaded from Arrow.com.