REVISIONS		
ISS	ZONE	DESCRIPTION\PER REQUEST\DATE

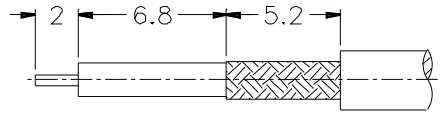

RECOMMENDED
CABLE STRIPPING DIM'S

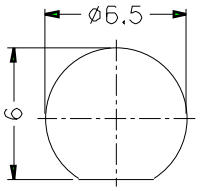

RECOMMENDED
MOUNTING HOLE

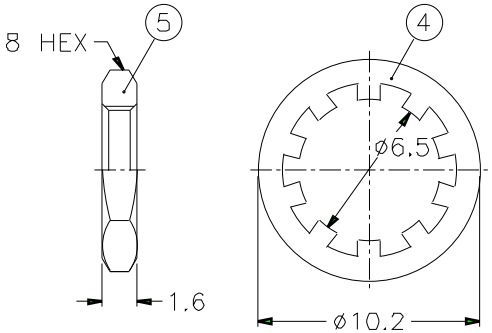

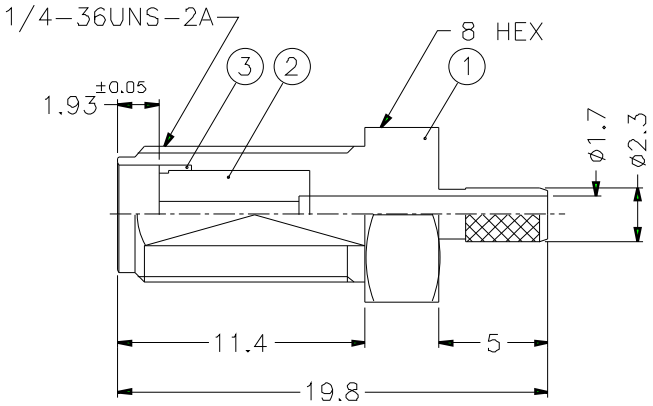

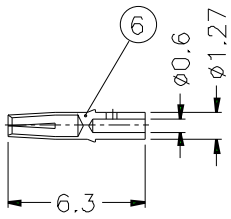

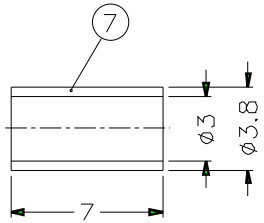

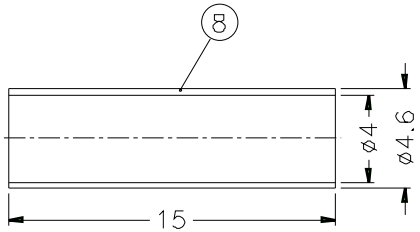

NOTES: FINISH (PLATING THICKNESS IN MICRO-INCHES)
1. BRASS PER QQ-B-626
2. BRASS PER QQ-B-613
3. GOLD PL. 3 MIN. THICK OVER NICKEL PL. 100 MIN. THICK OVER COPPER STRIKE
4. BERYLLIUM COPPER PER QQ-C-530
5. GOLD PL. 50 MIN. THICK OVER NICKEL PL. 100 MIN. THICK OVER COPPER STRIKE
6. TEFLON MIL-P-19468

1. CRIMPED FERRULE
HEX CRIMP SIZE .128"
2. CONTACT PIN TO SOLDER
3. MAX. PANEL THICKNESS=3.2mm

NO.	DESCRIPTION	MATERIAL	FINISH	Q'TY	DRAWING NO.
8	HEAT SHRINK TUBING		BLACK	1	HT-46/4X15
7	FERRULE	COPPER	NOTE 3	1	FR-38/3X7C
6	CONTACT PIN	NOTE 4	NOTE 5	1	SMA87051902-3
5	HEX NUT	NOTE 1	NOTE 3	1	HN8-1/4-36X16
4	LOCK WASHER	NOTE 2	NOTE 3	1	LW-102/65X05
3	RING	NOTE 1	NOTE 3	1	SMA7071A4-4B
2	INSULATOR	NOTE 6	NATURAL	1	SMA6411A4-2T-50
1	BODY	NOTE 1	NOTE 3	1	SMA6411A4-1-23/17

DIMENSIONS ARE IN MILLIMETERS

UNLESS OTHERWISE SPECIFIED TOLERANCES
0.5-6 = ±0.2
6-30 = ±0.4
30-120 = ±0.6
120-315 = ±1
315-1000 = ±1.6
1000-2000 = ±2.4

SCALE 3/1 ISSUE A

PART NO. SMA6411A4-3GT50G-5-50

APPROVED DATE 10-11-01'

CHECKED DATE 10-11-01'

DRAWN DATE 10-11-01'

FILE NO.

Amphenol

TITLE SMA BULKHEAD CRIMP JACK (FOR RG-174/U,188A/U,316/U)

DRAWING NO. KJ-SMA6411A4-3GT50G-316U-50

ITEM NO.