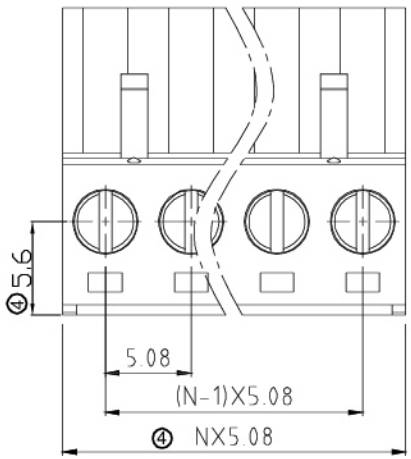

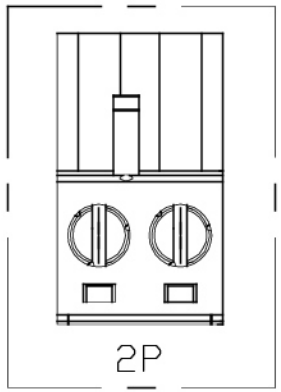

④Technical Data:

Material:

Contact(metal housing): Copper Alloy with Ni plated

Terminal screw: Steel galvanized with Cr3+ plated with "-" SCREW

Wire guard: Copper Alloy, Tin plated.

Insulator body(housing): Polyamide(UL94V-0) Green

Electrical

Voltage rating: 300VAC

Current rating: 16 Amps/way max

Contact resistance: 20mΩ(max)

Withstanding Voltage: 2500VAC(1min) Test time=60sec/1pcs

Wire range: 12-26AWG

Mechanical:

Torque: 5.0kgf.cm/M3

Operating temperature: -40°C to +105°C

Soldring reliability:

Test temperature= 250°C±10°C 5 seconds max

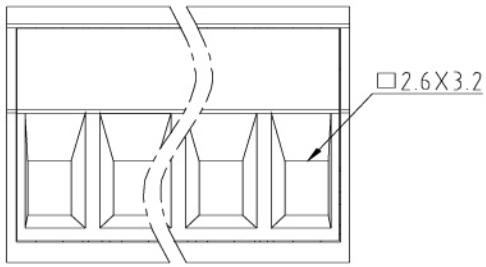

N=Number of contacts

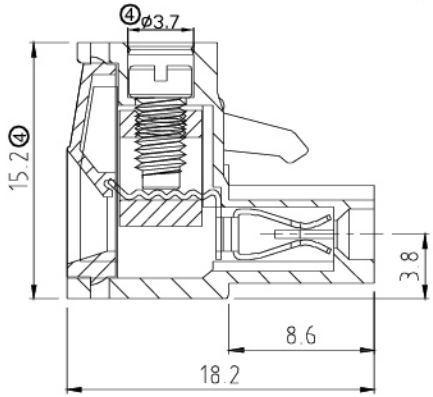

RoHS compliant

⑤ UL File No.: E349947

Scale	Free
TOLERANCE	
X.	±0.50
X.X	±0.30
X.XX	±0.20
DIM	TOL
X.°	±1°
Angle	TOL

Id.	Modification	Date	Name
⑤	Update UL	23.03.2017	C.Bakula
④	Re-drawn	01.11.2016	Winnie
③	Add the UL File No.	19.04.2016	Winnie
②	Updated drawing	15.10.2010	Rale
①	Drawn	10.12.2009	Dean

	Date	Name
Drawn	10.12.2009	Dean
Approved	01.11.2016	Winnie

ASSMANN WSW components

Customer-No.

ASSMANN WSW-No.
A-TB508-TJxxD

Drawing-No.
ASS 3911 CO

rev05

Replace

Sheet

SV2088

Downloaded from Arrow.com.