REVISION					
ZONE	LTR	ECN	DESCRIPTION	DATE	APPROVED
	A	40906	NEW RELEASE	3-16-1	

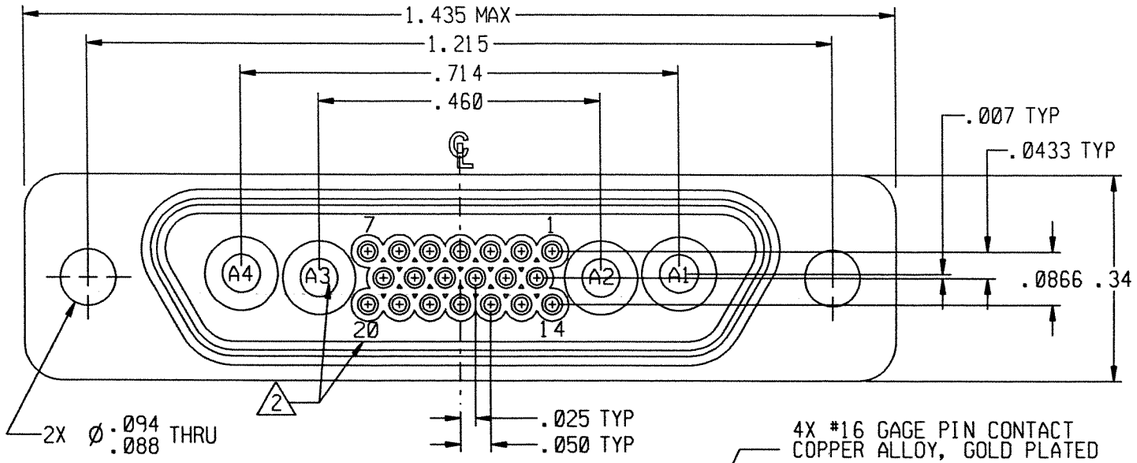

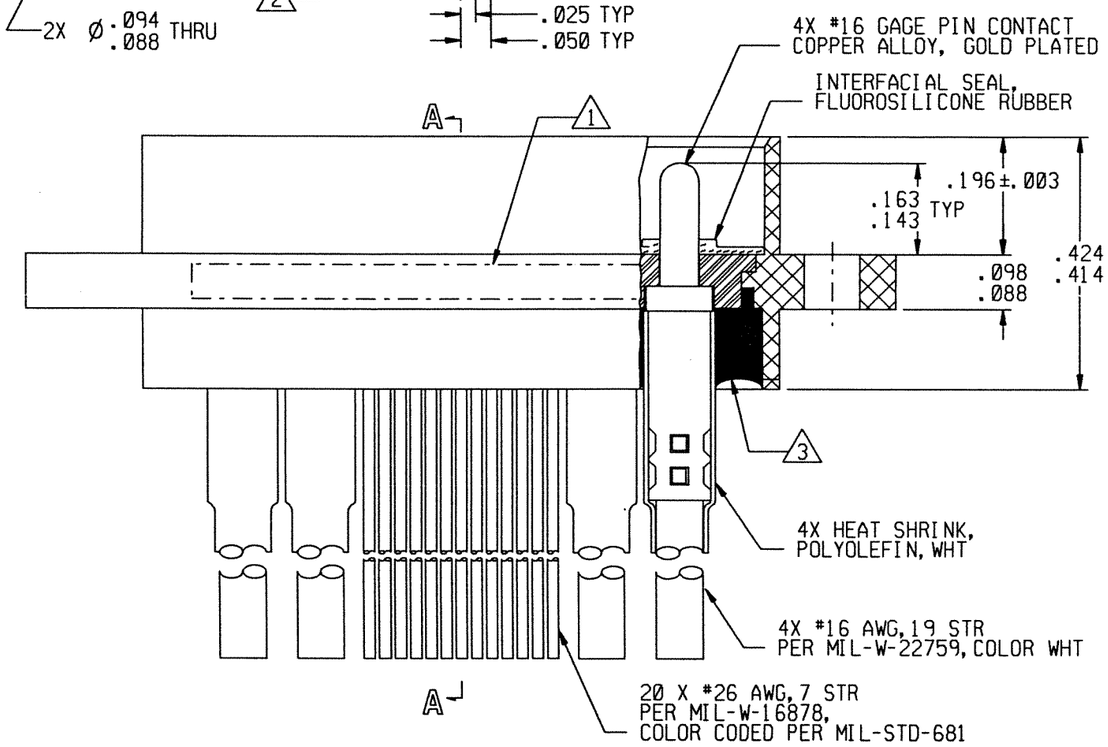

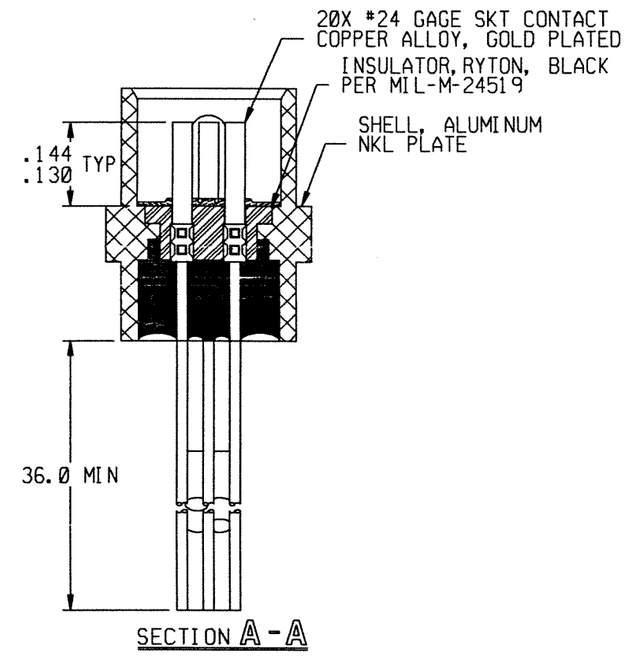

Tyco Dwg 8-1532129-1
Micro P/N 094-9706-0048

NOTES: UNLESS OTHERWISE SPECIFIED

1. MARK PER TIS.
2. CAVITY IDENT ARE FOR REF ONLY. DO NOT ACTUALLY APPEAR ON ON THE PART.
3. POTTING COMPOUND USED IS 194-8102-6215/6225.

UNLESS OTHERWISE SPECIFIED DIMENSIONS ARE IN INCHES. TOLERANCE ARE:

FRACTIONS	DECIMALS	ANGLES
±1/8	.XX ±.01 .XXX ±.005	±2°

MATERIAL:

FINISH:

APPROVALS	SIGNATURE	DATE
DRAWN	Tonye	3/16/01
CHECKED		
PRO. ENG.		3-16-1
APPROVED		

THIS DOCUMENT IS THE PROPERTY OF MICRODOT CONNECTORS, A DIVISION OF UNI-STAR INDUSTRIES INC. USE OF THIS DOCUMENT OR ANY PART THEREOF IS STRICTLY FORBIDDEN WITHOUT THE EXPRESS WRITTEN PERMISSION OF MICRODOT CONNECTORS, A DIVISION OF UNI-STAR INDUSTRIES INC.

MICRODOT CONNECTORS
A DIVISION OF UNI-STAR INDUSTRIES INC.
306 PASADENA AVE., SO. PASADENA, CA 91030

METAL SHELL "D" CONNECTOR
RECEPTACLE, MCK-XX-B-51PX
4 #16 GAGE PIN, 20 #24 GAGE SKT

PROD CODE 845

CODE CDM

SIZE	CODE IDENT NO.	DRAWING NO.
B	98278	094-9706-0048

SCALE: NONE

SHEET 1 OF 1

Downloaded from Arrow.com.