NOTES:

THIRD ANGLE PROJ.

REVISIONS				
REV	DESCRIPTION	DATE	ECO	APPR
A	RELEASE TO MFG.	16-Sep-15	50777	SH

1. MATERIALS AND FINISHES (IN MICRO-INCHES):

   BODY = BRASS, MATTE TIN PL.100 MIN.
   CONTACT = BRASS, GOLD PL.6 MIN.
   INSULATOR = LCP, COLOR: NATURAL.
   FAKRA HOUSING = PPA, COLOR & KEYING PER DIN 72594-1 & USCAR-18 (SEE TABLE FOR KEY CODES & COLORS)

2. ELECTRICAL:

   A. IMPENDANCE: 50 OHM NOMINAL
   B. FREQUENCY RANGE: DC- 3.0 GHz
   C. VSWR(RETURN LOSS): 1.4(-15.6 dB), MAX.(DC-2.0 GHz)
      (MATED PAIR) 1.5(-13.9 dB), MAX.(2.0-3.0 GHz)
   D. D.W.V.: 800 VRMS, MIN.

3. MECHANICAL:

   A. DURABILITY: 100 CYCLES MIN.
   B. TEMPERATURE RANGE: -40° C TO 105° C
   C. HOUSING RETENTION: 110N MIN. AXIAL
   D. COMPATIBLE WITH LEAD-FREE REFLOW PROCESS (349-50712)

4. PACKAING:

   A. TYPE: TAPE & REEL (300 PCS/REEL)
   B. PACKAGING MARKING: AMPHENOL RF
      4FAI-NXRP-PCB-3
      DATE CODE

5. ⊕ CENTER OF GRAVITY

6. INTERFACE DIMENSIONS MEET DIN 72594-1 AND USCAR-18.

CONFIGURATION CONTROL:
NO CHANGES PERMITTED TO DRAWING WITHOUT PPAP QUALIFIED CUSTOMER APPROVAL

CODING	PART NUMBER & DRAWING NUMBER	COLOR	RAL NO.
A	4FAI-NARP-PCB-3	JET BLACK	9005
B	4FAI-NBRP-PCB-3	CREAM	9001
C	4FAI-NCRP-PCB-3	SIGNAL BLUE	5005
D	4FAI-NDRP-PCB-3	CLARET VIOLET	4004
E	4FAI-NERP-PCB-3	LEAF GREEN	6002
F	4FAI-NFRP-PCB-3	NUT BROWN	8011
G	4FAI-NGRP-PCB-3	BLUE GREY	7031
H	4FAI-NHRP-PCB-3	HEATHER VIOLET	4003
I	4FAI-NIRP-PCB-3	BEIGE	1001
K	4FAI-NKRP-PCB-3	CURRY	1027
L	4FAI-NLRP-PCB-3	CARMINE RED	3002
M	4FAI-NMRP-PCB-3	PASTEL ORANGE	2003
N	4FAI-NNRP-PCB-3	PASTEL GREEN	6019
Z	4FAI-NZRP-PCB-3	WATER BLUE	5021

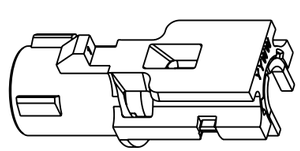

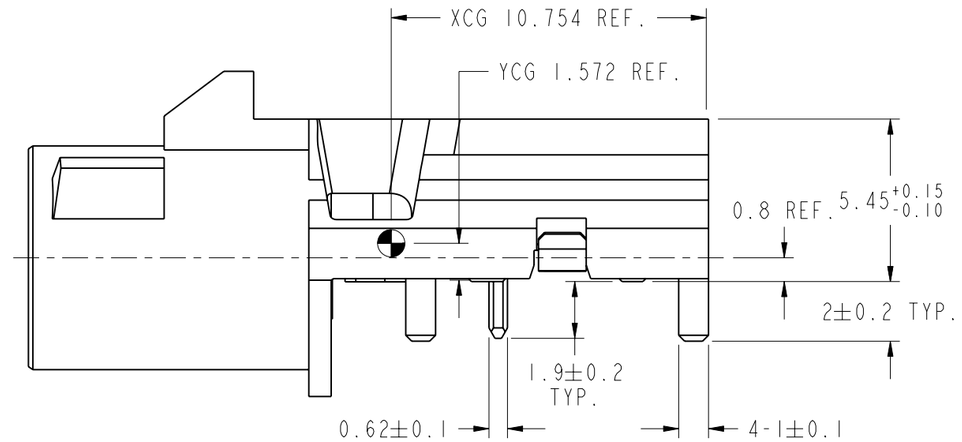

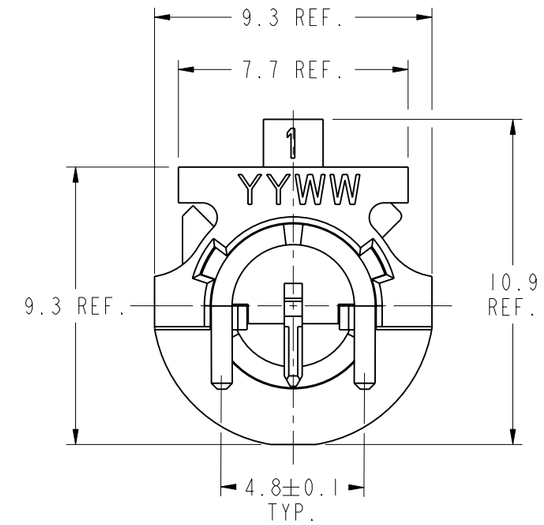

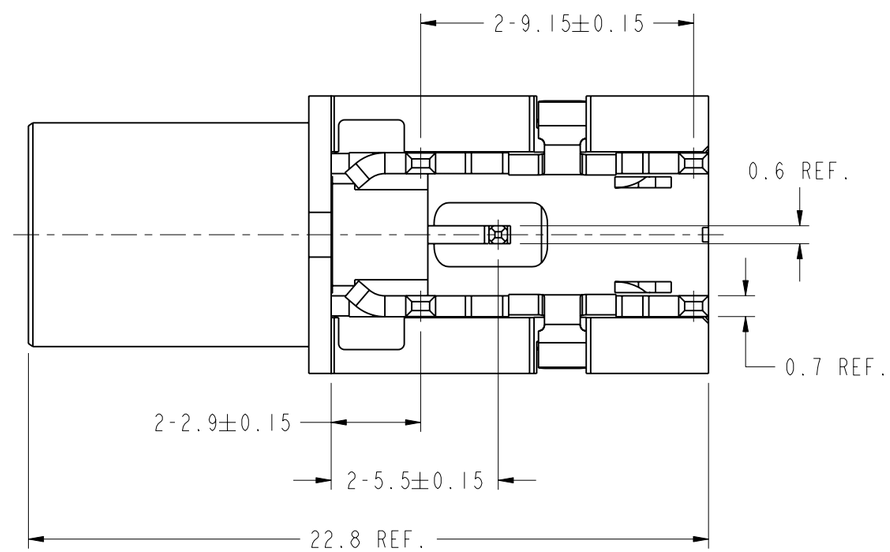

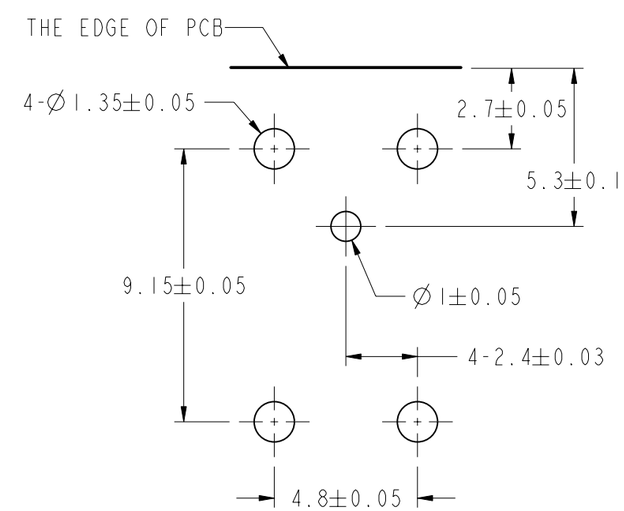

RECOMMENDED PCB LAYOUT

UNLESS OTHERWISE SPECIFIED, DIMENSIONS ARE IN METRIC AND TOLERANCES ARE:

<0.5mm	0.5 - 6mm	6 - 30mm	30 - 120mm	ANGLES
± 0.05mm	±0.1mm	±0.2mm	± 0.3mm	±1°

NOTICE - These drawings, specifications, or other data (1) are, and remain the property of Amphenol corp. (2) must be returned upon request; and (3) are confidential and not to be disclosed to any person other than those to whom they are given by Amphenol Corp. the furnishing of these drawings, specifications, or other data by Amphenol Corp., or to any other person to anyone for any purpose is not to be regarded by implication or otherwise in any manner licensing, granting rights to permitting such holder or any other person to manufacture, use or sell any product, process or design, patented or otherwise, that may in any way be related to or disclosed by said drawings, specifications, or other data.

MATERIAL

REFERENCE EAR5220 AND

CONFIGURATION LEVEL:

FINISH

DRAWN H.CHEN	DATE 16-Sep-15	
ENGINEER R.SHANG	DATE 16-Sep-15	
APPROVED B.C.GLEISSNER	DATE 16-Sep-15	
CAD FILE		

TITLE
FAKRA R/A PCB PLUG

SCALE: 1.0:1.0 | SHEET 2 OF 2

DWG SIZE B | REV A

Amphenol RF
www.amphenolrf.com

DRAWING NO. 4FAI-NXRP-PCB-3
ITEM NO. 4FAI-NXRP-PCB-3
PART NO. 4FAI-NXRP-PCB-3

Downloaded from Arrow.com.