THIS DRAWING IS UNPUBLISHED. RELEASED FOR PUBLICATION - ,- .
© COPYRIGHT - BY TYCO ELECTRONICS CORPORATION. ALL RIGHTS RESERVED.

LOC	DIST
AD	00

REVISIONS

P	LTR	DESCRIPTION	DATE	DWN	APVD
	D	REVISED PER ECO-10-008084	26APR10	HMR	JG

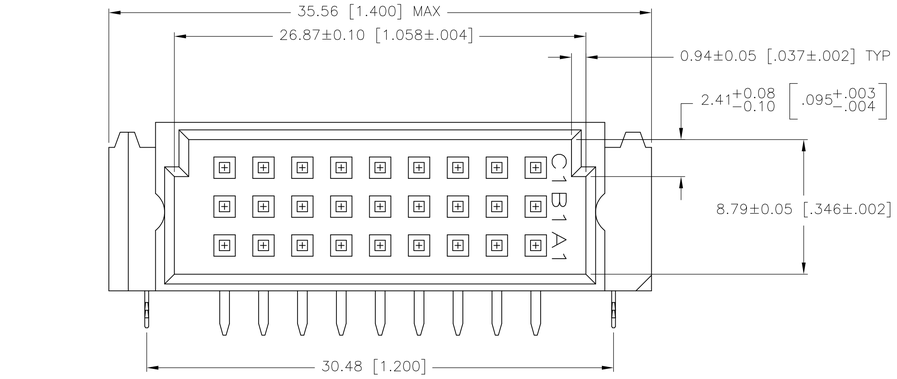

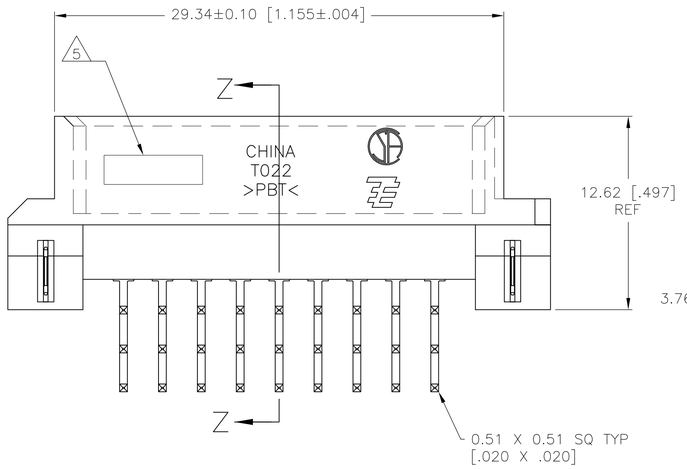

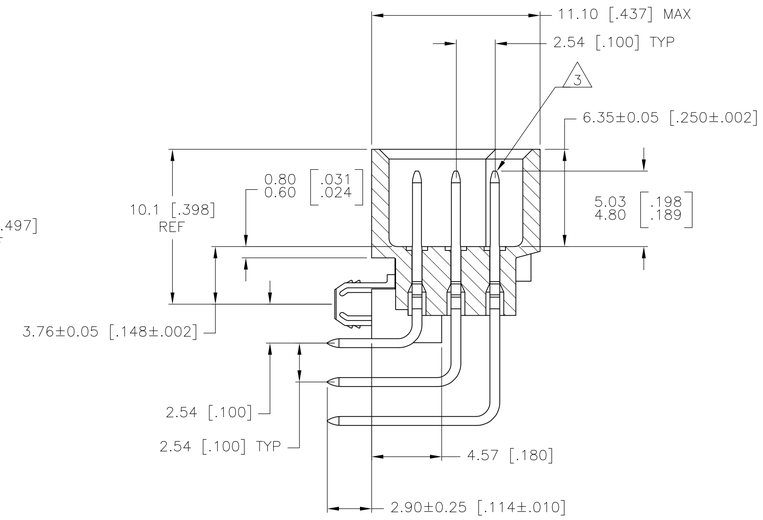

SECTION Z–Z

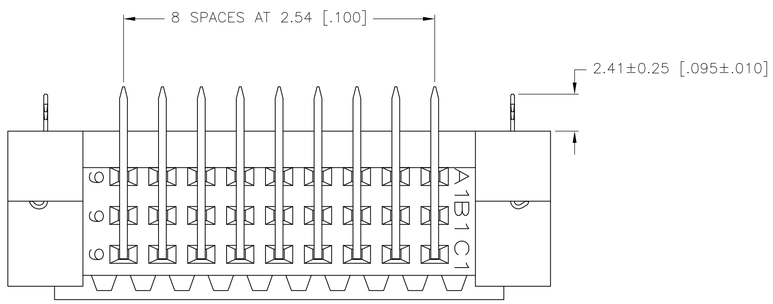

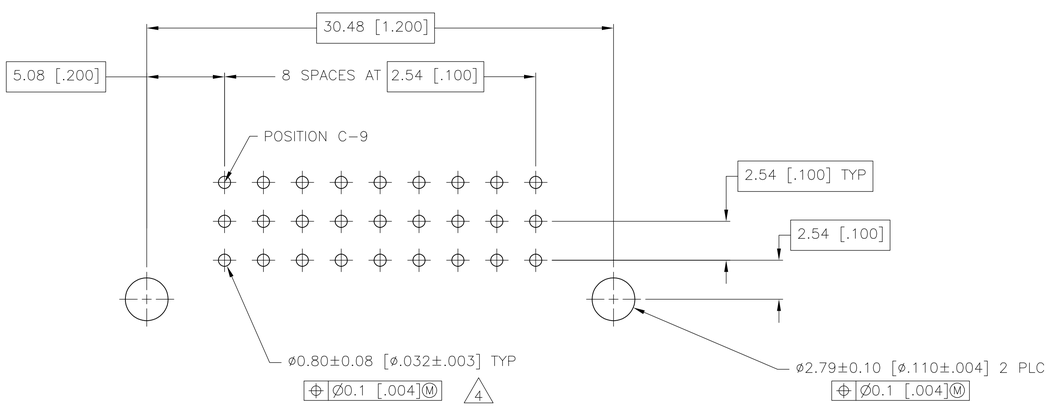

PC BOARD LAYOUT

1. HOUSING MATERIAL: GLASS FILLED POLYESTER, COLOR: GRAY.
2. POST MATERIAL: BRASS
3. POST FINISH: 0.00076[.000030] MIN GOLD IN MATING AREA, 0.00254–0.00508[.000100–.000200] TIN–LEAD ON SOLDERTAILS, ALL OVER .00127[.000050] MIN NICKEL.
4. RECOMMENDED HOLE SIZE FOR MANUAL APPLICATION OF CONNECTOR ONTO PC BOARD.
5. PART NUMBER, DATE CODE MARKED ON OPPOSITE SIDE, THIS APPROX AREA.
6. CURRENT RATING – 2 AMPS MAXIMUM PER CONTACT.
7. POST FINISH: 0.00076[.000030] MIN GOLD IN MATING AREA, 0.00254–0.00508[.000100–.000200] MATTE TIN ON SOLDERTAILS, ALL OVER 0.00127[.000050] MIN NICKEL.

FINISH	NO. OF POSN	PART NUMBER
7	27	5–1571435–1
3	27	1571435–1

SUPERSEDED BY 5–1571435–1

THIS DRAWING IS A CONTROLLED DOCUMENT.

DIMENSIONS: mm

TOLERANCES UNLESS OTHERWISE SPECIFIED:
0 PLC ± –
1 PLC ± –
2 PLC ± 0.13[.005]
3 PLC ± –
4 PLC ± –
ANGLES ± –

MATERIAL 1 2

FINISH SEE TABLE

DWN R BROWN 12FEB03
CHK J GESFORD 12FEB03
APVD J GESFORD 12FEB03

PRODUCT SPEC —
APPLICATION SPEC —
WEIGHT —

Tyco Electronics
Tyco Electronics Corporation
Harrisburg, PA 17105–3608

NAME HEADER ASSEMBLY, EUROCARD, TYPE C, RIGHT ANGLE, WITH BOARD LOCKS

SIZE	CAGE CODE	DRAWING NO	RESTRICTED TO
A1	00779	C-1571435	—

CUSTOMER DRAWING SCALE 5:1 SHEET 1 OF 1 REV D

AMP 4805 REV 31MAR2000

Downloaded from Arrow.com.