750W High Reliable Ultra Wide Output Range Battery Charger & Power Supply 2-in-1

NPP-750 series

AC input side

DC output side

User's Manual

Click Me

UL62368-1 | BS EN/EN62368-1 BS EN/EN60335-1/2-29 | IEC62368-1 IEC60335-1/2-29 | J62368-1 | TPTC004

Industrial | Automate | Telecom | Network | EV | Marine

Features

- Multi-function single unit battery charger or power supply operation modes selectable
- Output voltage and current adjustable via potentiometer
- 3-stage charging curve for charging mode
- -30~+70℃ wide operating temperature
- Multiple protections: Short circuit / Over load / Over voltage / Over temperature
- Thermal controlled DC fan for noise reduction
- Remote ON-OFF control
- Comply with 62368-1+60335-1/-2-29 dual certification
- Suitable for lead-acid (Pb) batteries
- Carry handle accessory available (Order NO.:Carry handle, sold separately)
- 3 years warranty

Applications

- Radio system backup solution
- Electric scooter charger
- Camping car、Buses、Heavy duty truck、Specialty vehicles
- Surveillance system
- Industrial automation machinery
- Industrial control system
- Mechanical and electrical equipment

GTIN CODE

MW Search: https://www.meanwell.com/serviceGTIN.aspx

Description

NPP-750 is a miniaturized dual-purpose charger and power supply. In addition to being used as a three-stage charger for lead-acid batteries, it can also be used as a constant voltage output power supply to drive general load. The operating mode can be quickly switched by plugging or unplugging a connector on the front panel. Other features include: ultra-wide voltage output, adjustable voltage via VR on the panel (10.5~21V, 21~42V, 42~80V), adjustable charging current (50~100%), built-in intelligent fan with variable speed based on temperature to reduce noise and extend fan lifetime, -30~+70° C wide operating temperature, suitability for use in different environments, built-in remote ON/OFF control, compliance to IEC/EN/UL62368-1 and household EN60335-1/-2-29 dual safety, multiple built-in protections, and 3-year warranty. The NPP-750 is truly an intelligent, safe, and reliable universal dual-purpose charger and power supply with outstanding cost performance.

Model Encoding

NPP - 750 - 24

- 24 — Output voltage (12V/24V/48V)
- 750 — Rated wattage
- NPP — Series name

Downloaded from Arrow.com.

SPECIFICATION for Battery Charger mode (Default)

MODEL		NPP-750-12	NPP-750-24	NPP-750-48
OUTPUT	BOOST CHARGE VOLTAGE(Vboost)(default)	14.4V	28.8V	57.6V
	FLOAT CHARGE VOLTAGE(Vfloat)(default)	13.8V	27.6V	55.2V
	VOLTAGE ADJUSTABLE RANGE	10.5 ~ 21V	21 ~ 42V	42 ~ 80V
		By built-in potentionmeter		
	MAX. OUTPUT CURRENT(CC)	43A	22.5A	11.3A
	CURRENT ADJUSTABLE RANGE Note.3	21.5 ~ 43A	11.25 ~ 22.5A	5.65 ~ 11.3A
		By built-in potentionmeter		
	MAX. POWER	722.4W	756W	759.36W
	RECOMMENDED BATTERY CAPACITY (AMP HOURS) Note.4	150 ~ 500AH	80 ~ 260AH	40 ~ 130AH
INPUT	VOLTAGE RANGE Note.5	90 ~ 264VAC 127 ~ 370VDC		
	FREQUENCY RANGE	47 ~ 63Hz		
	POWER FACTOR (Typ.)	PF>0.98/115VAC, PF>0.95/230VAC at full load		
	EFFICIENCY (Typ.) Note.6	92%	93%	93%
	AC CURRENT (Typ.)	8.7A/115VAC 4A/230VAC		
	INRUSH CURRENT (Typ.)	COLD START 50A at 230VAC		
PROTECTION	SHORT CIRCUIT Note.7	Protection type : Constant current limiting, charger will shutdown after 5 sec, re-power on to recover		
	OVER VOLTAGE	21.5 ~ 26V	43 ~ 52V	82 ~ 100V
		Protection type : Shut down and latch off o/p voltage, re-power on to recover		
	OVER TEMPERATURE	Shut down O/P voltage, recovers automatically after temperature goes down		
FUNCTION	CHARGING STAGE	3 stage only		
	CHARGER OK SIGNAL	The TTL signal out, Charger OK = H(4.5 ~ 5.5V) ; Charger failure or protection status =L(-0.5 ~ +0.5V)		
	BATTERY FULL SIGNAL	The TTL signal out, Battery full = H(4.5 ~ 5.5V); Charging = L(-0.5 ~ +0.5V)		
	REMOTE CONTROL	Open : Charger stop charging Short : Charger normal work		
	FAN ON/OFF CONTROL	Depends on internal temperature		
ENVIRONMENT	WORKING TEMP.	-30 ~ +70℃ (Refer to "Derating Curve")		
	WORKING HUMIDITY	20 ~ 95% RH non-condensing		
	STORAGE TEMP., HUMIDITY	-40 ~ +85℃, 10 ~ 95% RH non-condensing		
	TEMP. COEFFICIENT	±0.05%/℃ (0 ~ 50℃)		
	VIBRATION	10 ~ 500Hz, 2G 10min./1cycle, 60min. each along X, Y, Z axes		
SAFETY & EMC (Note 8)	SAFETY STANDARDS	CB IEC62368-1,IEC60335-1/2-29, Dekra BS EN/EN62368-1,BS EN/EN60335-1/2-29, UL62368-1, J62368-1, EAC TP TC 004 approved		
	WITHSTAND VOLTAGE	I/P-O/P:3KVAC I/P-FG:2KVAC O/P-FG:0.5KVAC		
	ISOLATION RESISTANCE	I/P-O/P, I/P-FG, O/P-FG:100M Ohms / 500VDC / 25℃/ 70% RH		
	EMC EMISSION	**Parameter**	**Standard**	**Test Level / Note**
		Conducted	BS EN/EN55032 (CISPR32),BS EN/EN55014-1	Class B
		Radiated	BS EN/EN55032 (CISPR32),BS EN/EN55014-1	Class B
		Harmonic Current	BS EN/EN61000-3-2	Class A
		Voltage Flicker	BS EN/EN61000-3-3	-----
	EMC IMMUNITY	J55032(H29)		
		Parameter	**Standard**	**Test Level / Note**
		ESD	BS EN/EN61000-4-2	Level 3, 8KV air ; Level 2, 4KV contact
		Radiated	BS EN/EN61000-4-3	Level 2, 3V/m
		EFT / Burst	BS EN/EN61000-4-4	Level 2, 1KV
		Surge	BS EN/EN61000-4-5	Level 2, 1KV/Line-Line,Level 3, 2KV/Line-Earth
		Conducted	BS EN/EN61000-4-6	Level 2, 3Vrms
		Magnetic Field	BS EN/EN61000-4-8	Level 1, 1A/m
		Voltage Dips and Interruptions	BS EN/EN61000-4-11	>95% dip 0.5 periods, 30% dip 25 periods, >95% interruptions 250 periods
OTHERS	MTBF	883.5K hrs min. Telcordia SR-332 (Bellcore) ; 95.7K hrs min. MIL-HDBK-217F (25℃)		
	DIMENSION	230*158*67mm (L*W*H)		
	PACKING	1.84Kg; 4pcs/ 9Kg / 1.63CUFT		

NOTE

1. Modification for charger specification may be required for different battery specification. Please contact battery vendor and MEAN WELL for details.
2. All parameters NOT specially mentioned are measured at 230VAC input, rated load and 25℃ of ambient temperature.
3. Float charge voltage(Vfloat) adjustable via potentiomerter in battery charger mode.
4. This is MEAN WELL's suggested range. Please consult your battery manufacturer for their suggestions about maximum charging current limitation.
5. Derating may be needed under low input voltages. Please check the derating curve for more details.
6. The efficiency is measured at 16.8V charge voltage(12V model), 33.6V charge voltage(24V model), 67.2V charge voltage(48V model).
7. This protection mechanism is specified for the case the short circuit occurs after the charger is turned on.
8. The charger is considered a component which will be installed into a final equipment. All the radiation tests require an additional 13*26*30 NIZN magnetic clasp or magnetic ring to the output line for CLASS B and without NIZN magnetic clasp or magnetic ring for CLASS A. The final equipment must be re-confirmed that it still meets EMC directives. For guidance on how to perform these EMC tests, please refer to “EMI testing of component power supplies.” (as available on https://www.meanwell.com//Upload/PDF/EMI_statement_en.pdf)
9. The ambient temperature derating of 3.5℃/1000m with fanless models and of 5℃/1000m with fan models for operating altitude higher than 2000m(6500ft).

※ Product Liability Disclaimer : For detailed information, please refer to https://www.meanwell.com/serviceDisclaimer.aspx

Downloaded from Arrow.com.

SPECIFICATION for Power Supply mode (Selectable via pin3 & 4 jumper of 14pins connector on panel)

MODEL		NPP-750-12	NPP-750-24	NPP-750-48
OUTPUT	DC VOLTAGE	14.4V	28.8V	57.6V
	VOLTAGE ADJUSTABLE RANGE	10.5 ~ 21V	21 ~ 42V	42 ~ 80V
		By built-in potentionmeter		
	CURRENT ADJUSTABLE RANGE	21.5 ~ 43A	11.25 ~ 22.5A	5.65 ~ 11.3A
	RATED CURRENT	43A	22.5A	11.3A
	RATED POWER	722.4W	756W	759.36W
	RIPPLE & NOISE(max.)	180mVp-p	300mVp-p	480mVp-p
	VOLTAGE TOLERANCE	±1.0%	±1.0%	±1.0%
	LINE REGULATION	±0.5%	±0.5%	±0.5%
	LOAD REGULATION	±1.0%	±1.0%	±0.5%
	SETUP, RISE TIME	1800ms, 60ms/230VAC at full load		
	HOLD UP TIME (Typ.)	16ms/230VAC at 75% load 10ms/230VAC at full load		
INPUT	VOLTAGE RANGE Note.3	90 ~ 264VAC 127 ~ 370VDC		
	FREQUENCY RANGE	47 ~ 63Hz		
	POWER FACTOR (Typ.)	PF>0.98/115VAC, PF>0.95/230VAC at full load		
	EFFICIENCY (Typ.)	92%	93%	93%
	AC CURRENT (Typ.)	8.7A/115VAC 4A/230VAC		
	INRUSH CURRENT (Typ.)	COLD START 50A at 230VAC		
PROTECTION	OVERLOAD	105 ~ 115% rated output power		
		Protection type : Constant current limiting, unit will shutdown after 5 sec, re-power on to recover		
	SHORT CIRCUIT	Protection type : Constant current limiting, unit will shutdown after 5 sec, re-power on to recover		
	OVER VOLTAGE	21.5 ~ 26V	43 ~ 52V	82 ~ 100V
		Protection type : Shut down and latch off o/p voltage, re-power on to recover		
	OVER TEMPERATURE	Shut down O/P voltage, recovers automatically after temperature goes down		
FUNCTION	REMOTE CONTROL	Open : Power OFF Short : Power ON		
	DC OK	The TTL signal out, DC OK = H(4.5 ~ 5.5V) ; Power supply failure or protection = L(-0.5 ~ +0.5V)		
	FAN SPEED CONTROL	Depends on internal temperature		
ENVIRONMENT	WORKING TEMP.	-30 ~ +70℃ (Refer to "Derating Curve")		
	WORKING HUMIDITY	20 ~ 95% RH non-condensing		
	STORAGE TEMP., HUMIDITY	-40 ~ +85℃, 10 ~ 95% RH non-condensing		
	TEMP. COEFFICIENT	±0.05%/℃ (0 ~ 50℃)		
	VIBRATION	10 ~ 500Hz, 2G 10min./1cycle, 60min. each along X, Y, Z axes		
SAFETY & EMC (Note 4)	SAFETY STANDARDS	CB IEC62368-1,IEC60335-1/2-29, Dekra BS EN/EN62368-1,BS EN/EN60335-1/2-29, UL62368-1, J62368-1,EAC TP TC 004 approved		
	WITHSTAND VOLTAGE	I/P-O/P:3KVAC I/P-FG:2KVAC O/P-FG:0.5KVAC		
	ISOLATION RESISTANCE	I/P-O/P, I/P-FG, O/P-FG:100M Ohms / 500VDC / 25℃/ 70% RH		
	EMC EMISSION	**Parameter**	**Standard**	**Test Level / Note**
		Conducted	BS EN/EN55032 (CISPR32),BS EN/EN55014-1	Class B
		Radiated	BS EN/EN55032 (CISPR32),BS EN/EN55014-1	Class B
		Harmonic Current	BS EN/EN61000-3-2	Class A
		Voltage Flicker	BS EN/EN61000-3-3	-----
	EMC IMMUNITY	J55032(H29)		
		Parameter	**Standard**	**Test Level / Note**
		ESD	BS EN/EN61000-4-2	Level 3, 8KV air ; Level 2, 4KV contact
		Radiated	BS EN/EN61000-4-3	Level 2, 3V/m
		EFT / Burst	BS EN/EN61000-4-4	Level 2, 1KV
		Surge	BS EN/EN61000-4-5	Level 2, 1KV/Line-Line,Level 3, 2KV/Line-Earth
		Conducted	BS EN/EN61000-4-6	Level 2, 3Vrms
		Magnetic Field	BS EN/EN61000-4-8	Level 1, 1A/m
		Voltage Dips and Interruptions	BS EN/EN61000-4-11	>95% dip 0.5 periods, 30% dip 25 periods, >95% interruptions 250 periods
OTHERS	MTBF	883.5K hrs min. Telcordia SR-332 (Bellcore) ; 95.7K hrs min. MIL-HDBK-217F (25℃)		
	DIMENSION	230*158*67mm (L*W*H)		
	PACKING	1.84Kg; 4pcs/ 9Kg / 1.63CUFT		

NOTE

1. Modification for charger specification may be required for different battery specification. Please contact battery vendor and MEAN WELL for details.
2. All parameters NOT specially mentioned are measured at 230VAC input, rated load and 25℃ of ambient temperature.
3. Derating may be needed under low input voltages. Please check the derating curve for more details.
4. The PSU is considered a component which will be installed into a final equipment. All the radiation tests require an additional 13*26*30 NIZN magnetic clasp or magnetic ring to the output line for CLASS B and without NIZN magnetic clasp or magnetic ring for CLASS A. The final equipment must be re-confirmed that it still meets EMC directives. For guidance on how to perform these EMC tests, please refer to "EMI testing of component power supplies." (as available on https://www.meanwell.com//Upload/PDF/EMI_statement_en.pdf)
5. The ambient temperature derating of 3.5℃/1000m with fanless models and of 5℃/1000m with fan models for operating altitude higher than 2000m(6500ft).

※ Product Liability Disclaimer : For detailed information, please refer to https://www.meanwell.com/serviceDisclaimer.aspx

Downloaded from Arrow.com.

Block Diagram

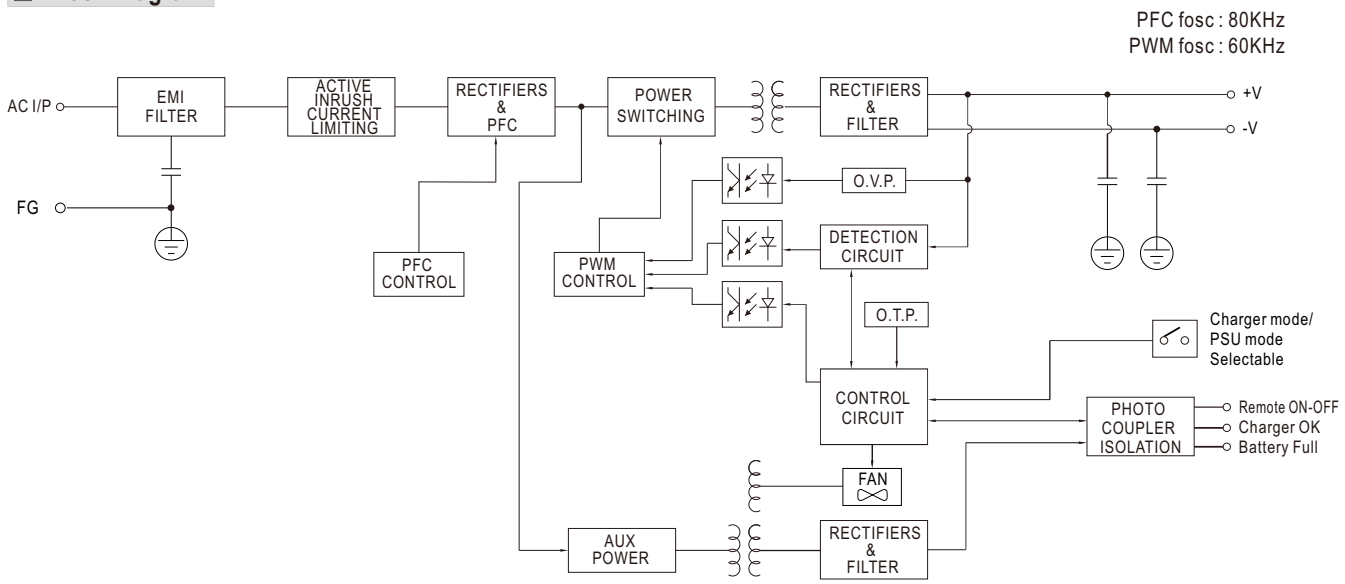

Derating Curve

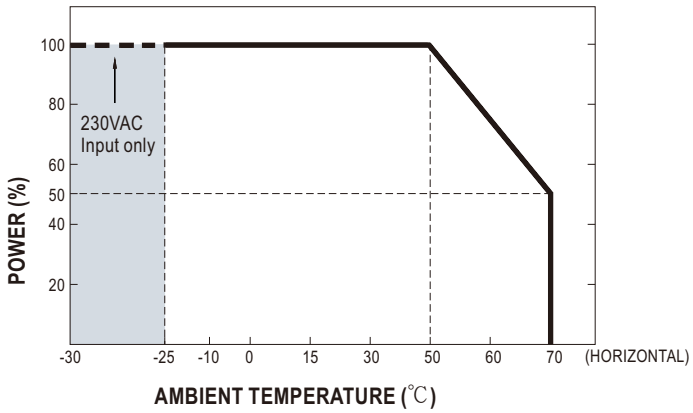

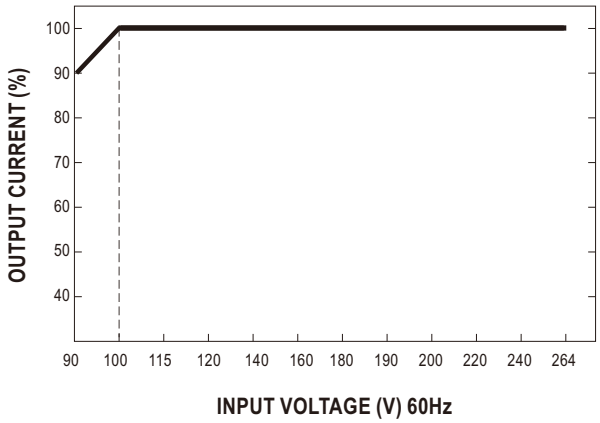

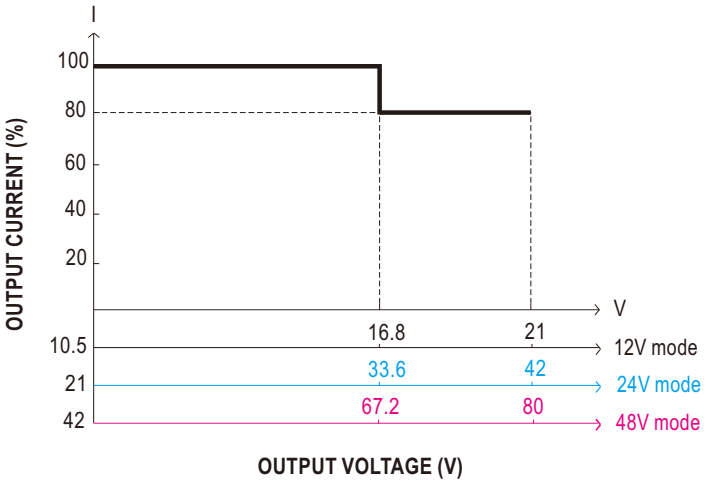

◎ The rated current change with the output voltage .

Downloaded from Arrow.com.

■ Function Manual

1. Battery Charger or Power Supply Operation modes selectable via pin3 and pin4 jumper

Between pin3 and pin4	Operation modes
Jumper connected	Power supply mode
Jumper removed	Battery charger mode (Default)

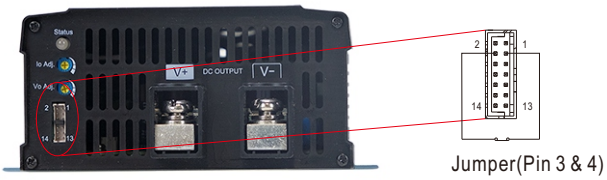

2.Charging Curve (Charging Mode)

◎ 3 stage charging curve

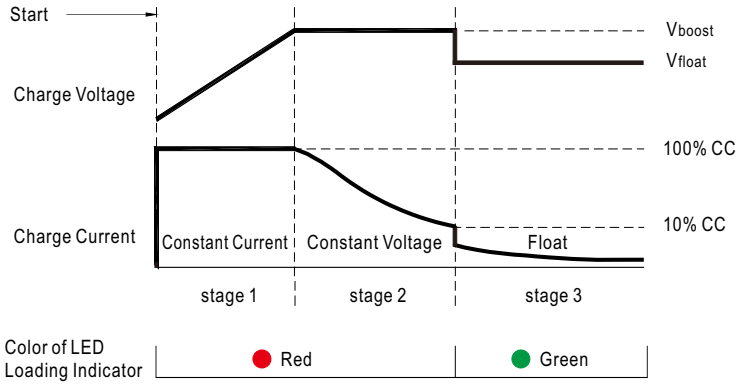

State	NPP-750-12	NPP-750-24	NPP-750-48
Constant Current	43A	22.5A	11.3A
Vboost	14.4V	28.8V	57.6V
Vfloat	13.8V	27.6V	55.2V

◎ Suitable for lead-acid batteries (flooded, Gel and AGM)

Downloaded from Arrow.com.

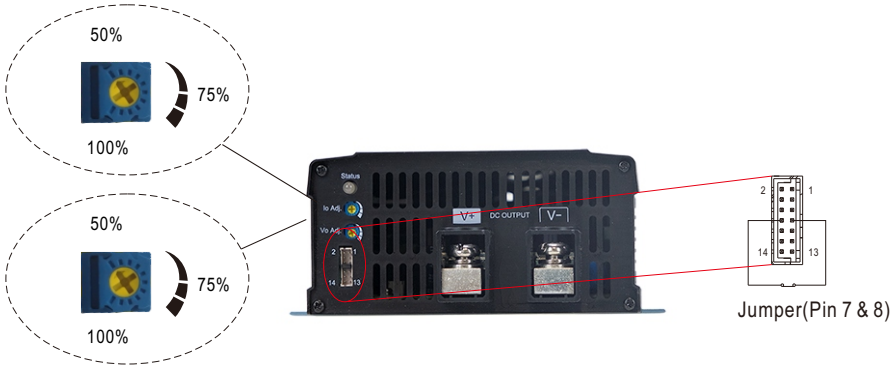

※ V_o x I_o must be less than or equal to the rated power. Please refer to derating curve (page 4) .

3.Charger OK / DC OK Signal

Charger OK / DC OK signal is a TTL level signal.

The maximum sourcing current is 10mA.

Charger OK / DC OK signal	Charger status
"High" : 4.5 ~ 5.5V	Work normally
"Low" : -0.5 ~ 0.5V	Failure or protection function activated

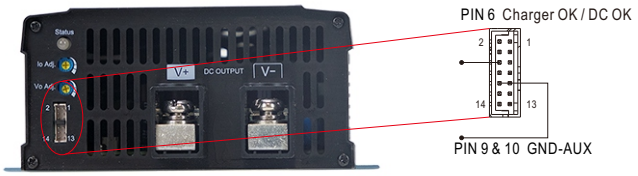

4.Remote ON-OFF Control

The NPP-750 can be turned ON/OFF by using the "Remote Control" function.

Between pin7 remote ON-OFF and pin8 +12Vaux	Charger status
Short (Pin 7 = 10.8 ~ 13.2V)	ON (Default)
Open (Pin 7 = -0.5 ~ 0.5V)	OFF

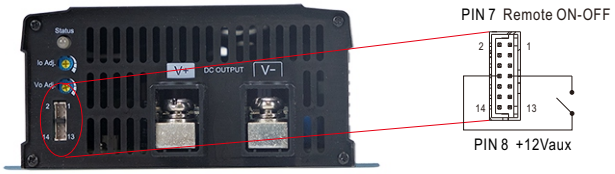

Downloaded from Arrow.com.

■ Mechanical Specification

(Unit: mm , tolerance ± 1mm)

Case No.285A Unit:mm

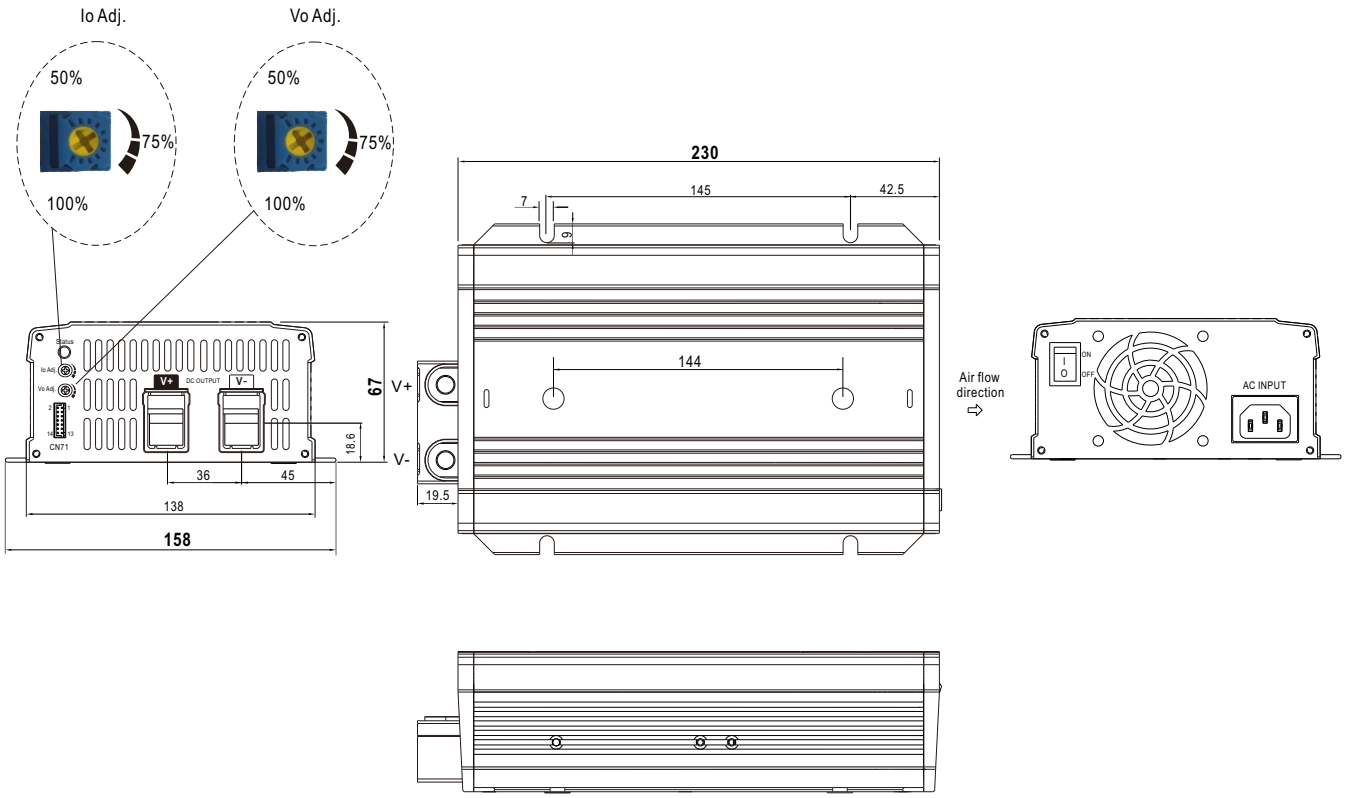

※ Connector Pin No. Assignment : HRS DF11-14DP-2DS or equivalent

Pin No.	Assignment	Mating Housing	Terminal
1,2,11~14	NC	HRS DF11-14DS or equivalent	HRS DF11-**SC or equivalent
3,4	Battery Charger or Power Supply mode selectable		
5	Battery Full		
6	Charger OK (Charger mode) or DC OK (Power supply mode)		
7	Remote ON-OFF		
8	+12V-AUX		
9,10	GND-AUX		

※ LED Status Table

Charger (Default)	
LED Indicator	Status
Green	Float stage (stage 3) or full charged
Red	Charging (stage 1 or stage 2)
No Light	Abnormal
Power supply mode	
LED Indicator	Status
Green	Normal working
No Light	Abnormal

Downloaded from Arrow.com.

※ Control Pin No. Assignment : HRS DF11-14DP-2DS or equivalent

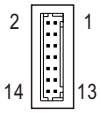

Mating Housing	HRS DF11-14DS or equivalent
Terminal	HRS DF11-**SC or equivalent

Pin No.	Function	Description
1,2,11~14	NC	-----
3,4	Battery charger / Power supply	Open: Battery charger, Color of LED loading indicator: Reference to battery charger. Short: Power supply, Color of LED loading indicator :Green.
5	Battery Full	Battery Full Signal, referenced to GND-AUX(Pin 9 & 10). The Signal is a TTL level signal. The maximum sourcing current is 10mA and only for output.(Note.2) Low (-0.5 ~ 0.5V) : When the battery is charging. High (4.5 ~ 5.5V) : When the battery is full.
6	Charger OK / DC OK	Charger OK / DC OK Signal, referenced to GND-AUX(Pin 9 & 10). The Signal is a TTL level signal. The maximum sourcing current is 10mA and only for output.(Note.2) Low (-0.5 ~ 0.5V) : When the charger fails or the protect function is activating. High (4.5 ~ 5.5V) : When the charger is working properly.
7	Remote ON-OFF	Remote charger ON/OFF Function. The charger can turn the output ON/OFF by dry contact between Remote ON-OFF and +12V-AUX.(Note.2) Short (10.8 ~ 13.2V) : Charger ON ; Open(-0.5 ~ 0.5V) : Charger OFF ; The maximum input voltage is 13.2V.
8	+12V-AUX	It is controlled by the Remote ON-OFF control.
9,10	GND-AUX	The signal return is isolated from the output terminal. (+V & -V)

Note1: Non-isolated signal, referenced to [GND(signal)].

Note2: Isolated signal, referenced to GND-AUX

■ Accessory List

※ Battery Charger or Power Supply mode of pin 3 and pin 4 mating pin along with NPP-750 (Standard accessory)

Pin 3 and Pin 4 mating pin	Quantity
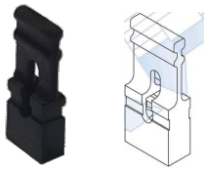 1FF1HMJ20-020-95BS or equivalent	1

Downloaded from Arrow.com.

※ Carry handle (Optional accessory, battery charger and pull handle should be ordered seperately)

MW's Order No.	Item		Quantity
Carry Handle	①	Handle	1
	②	Foot pad	4
	③	Screw	2

① Handle

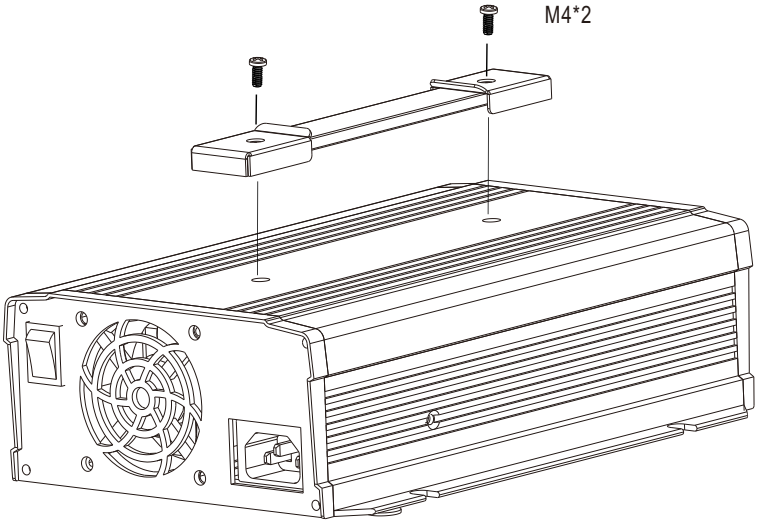

② Foot pad

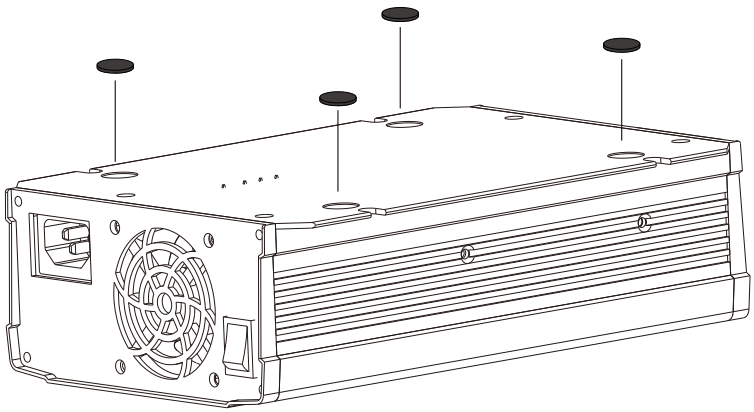

■ INSTALLATION MANUAL

Please refer to : http://www.meanwell.com/manual.html

Downloaded from Arrow.com.