ISS / REV	DESCRIPTION	CHANGED BY	DATE
5	DCR 6481	K.K-W	16/02/17
6	DCR 6708	R.CL	09/05/18
AA	CRN 26424	N.H	01/03/24

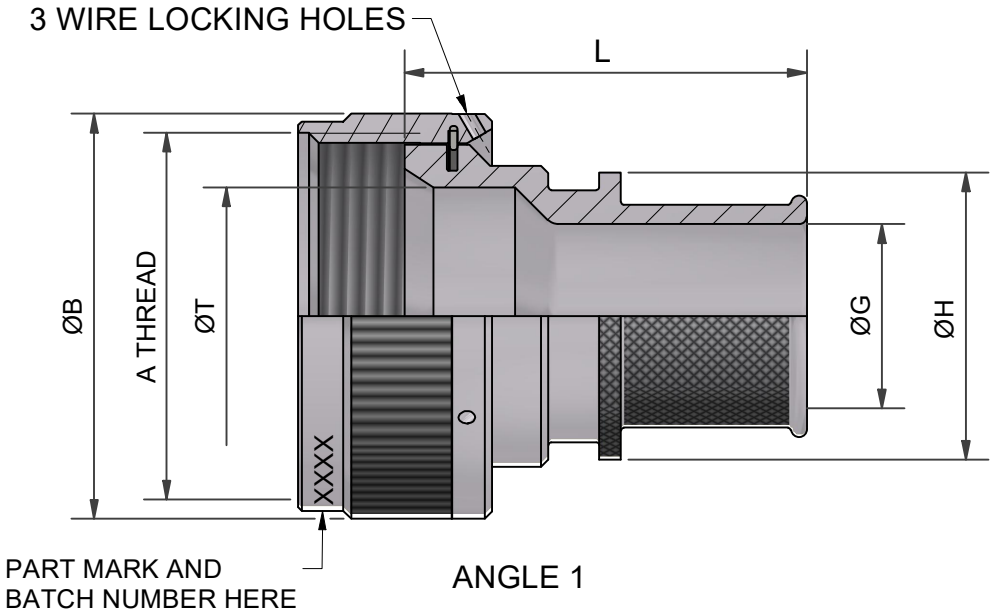

ANGLE 1

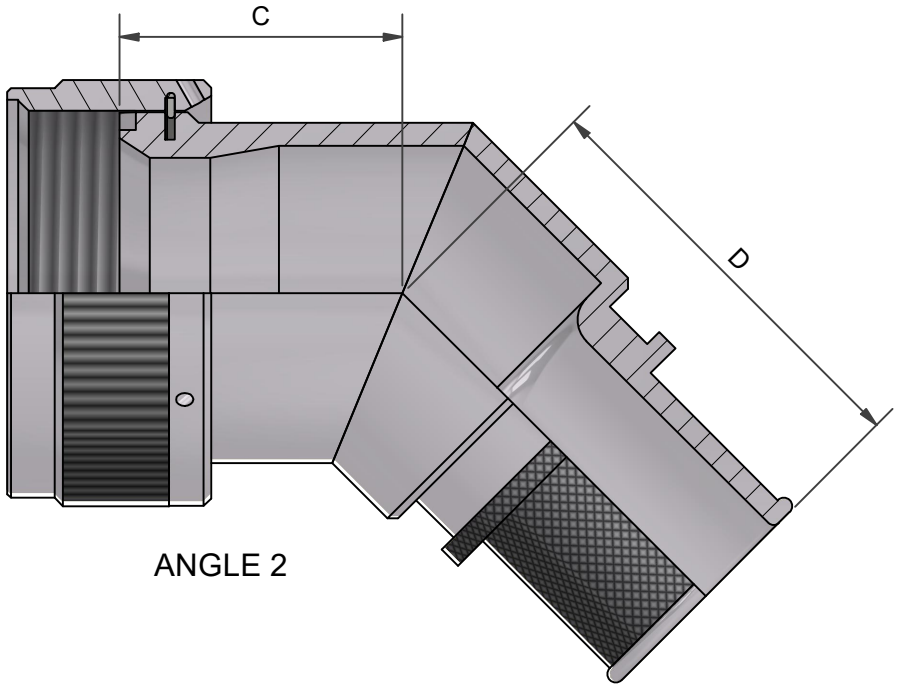

ANGLE 2

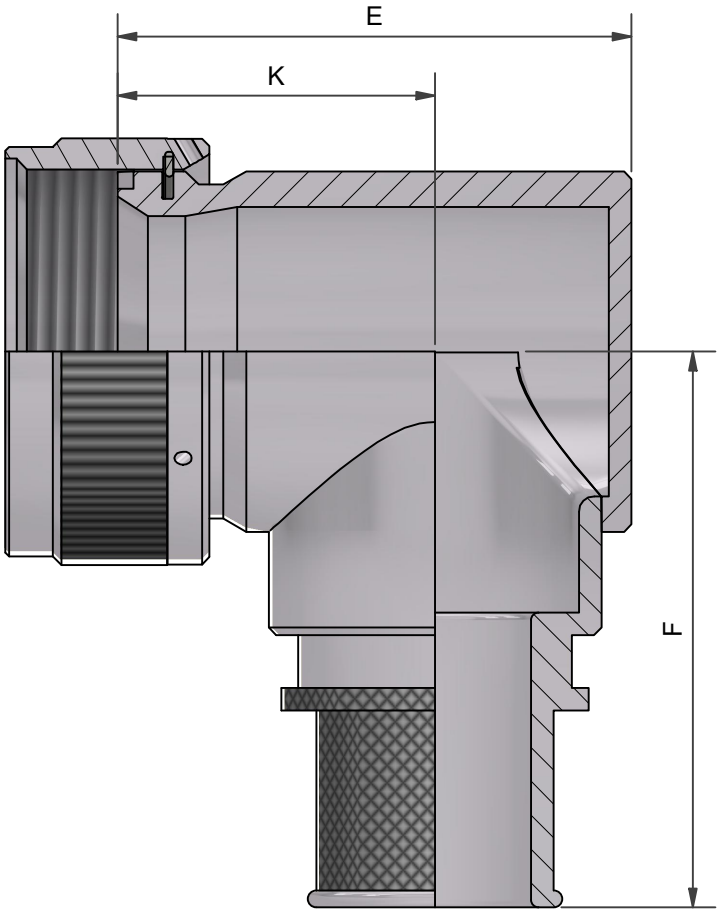

ANGLE 3
90° BACKSHELL

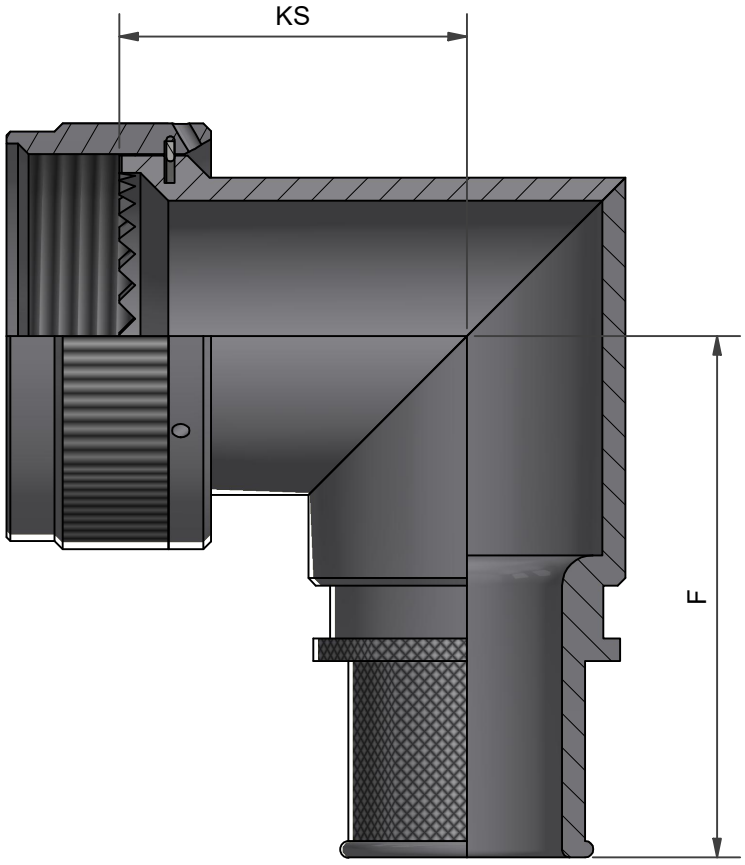

ANGLE 3
90° BACKSHELL
STAINLESS STEEL

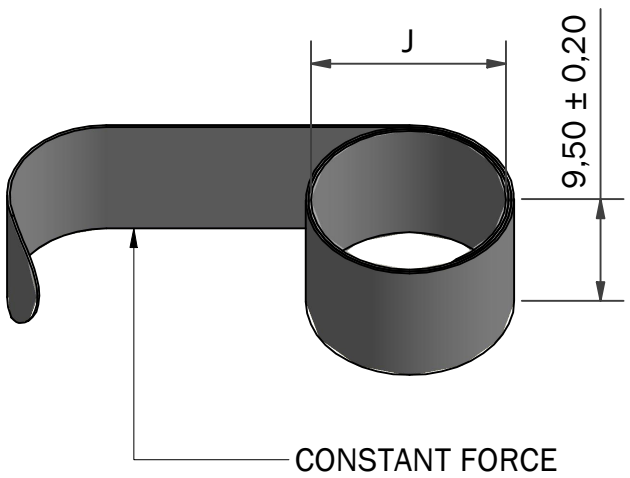

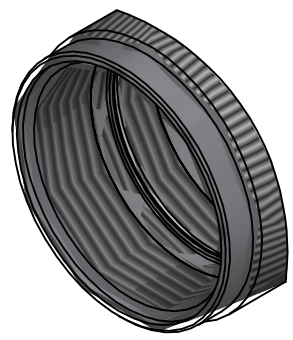

STAINLESS STEEL
TEETH VIEW

DRAWN	R. CL	DATE 09/05/2018	3RD ANGLE PROJECTION NOT TO SCALE	PART NUMBER: 91A SERIES	TE connectivity POLAMCO
SALES APPR	M.PAUL	09/05/2018			
DESIGN APPR	K.SHEPPARD	09/05/2018	UNLESS OTHERWISE SPECIFIED ALL DIMENSIONS IN MILLIMETRES GENERAL TOL LINEAR +/-0,25MM ANGULAR +/- 1°	TITLE: SPRING TERMINATION BACKSHELL	
PROD APPR	K.,SMITH	09/05/2018			
QUAL APPR	P.REES	05/09/2018	MATERIAL SEE PART NUMBER BREAKDOWN	ASSY USED ON:	
ISSUE/REV AA	CRN 26424		FINISH SEE PART NUMBER BREAKDOWN		
NCAGE CODE U5792	WEIGHT				

THIS DRAWING IS COPYRIGHT AND THE PROPERTY OF POLAMCO LTD IT MUST NOT BE COPIED, USED FOR MANUFACTURE OR OTHERWISE DISCLOSED WITHOUT PRIOR WRITTEN CONSENT OF THE COMPANY.

POLAMCO LTD, WESTON LOCK,
LOWER BRISTOL ROAD
BATH BA2 1EP

SHT 1

DRAWING NO: P11306

Downloaded from Arrow.com.

TABLE 1

SHELL SIZE	A THREAD	ØB MAX	ØT MIN	C ±0,5	D MAX	E MAX	F MAX	K ±0,5	L ±0,5	KS ±0,5
03	9/16-24 UNEF	17,0	6,7	16,8	26,6	26,6	29,4	17,8	28,0	16,0
08	1/2-20 UNF	15,6	6,5	16,6	26,4	24,7	30,5	17,5	28,0	17,5
10	5/8-24 UNEF	18,6	9,2	16,8	26,2	26,7	32,5	17,8	28,0	18,8
12	3/4-20 UNEF	21,7	12,7	17,3	26,1	29,2	32,3	18,7	28,0	20,4
14	7/8-20 UNEF	24,9	14,6	18,1	27,9	30,7	33,9	19,0	28,0	21,5
16	1-20 UNEF	28,2	17,7	19,0	28,2	34,2	37,2	21,0	28,0	23,0
18	1 1/16-18 UNEF	30,9	19,7	19,2	29,1	37,2	37,2	23,5	28,0	24,0
20	1 3/16-18 UNEF	34,1	22,9	20,1	29,3	42,2	38,8	27,0	28,0	25,7
22	1 5/16-18 UNEF	37,3	26,1	20,3	29,6	44,2	41,1	27,0	28,0	27,2
24	1 7/16-18 UNEF	40,4	29,0	21,8	31,5	45,2	42,1	27,0	28,0	28,7
28	1 3/4-18UNS	50,0	34,9	23,3	32,1	54,4	45,8	31,4	36,0	31,6
32	2-18 UNS	56,3	41,2	25,0	33,7	62,5	48,6	36,4	40,0	33,5
36	2 1/4-16 UN	62,7	46,7	26,2	34,9	67,4	51,8	38,0	45,0	36,0
40	2 1/2-16 UN	69,0	52,1	28,6	36,2	73,4	54,8	41,0	50,0	39,3
44	2 3/4-16 UN	75,4	58,6	30,1	37,8	79,7	58,0	44,1	60,0	40,8
48	3-16UN	81,7	65,0	31,3	39,0	86,0	61,1	47,2	60,0	40,8
61	1 1/2-18 UNEF	42,0	30,1	22,1	31,4	48,0	43,5	28,0	28,0	27,0

TABLE 2

ENTRY SIZE	G MIN	H +0,25/ -0,40	SPRING REF:
03	4,7	13,9	HE050
04	6,3	13,9	HE050
05	7,9	15,5	HE100
06	9,5	17,2	HE100
07	11,1	18,7	HE100
08	12,7	20,3	HE200
09	14,2	21,9	HE200
10	15,8	23,5	HE200
11	17,4	25,1	HE200
12	19,0	26,7	HE300
13	20,6	28,3	HE300
14	22,2	29,9	HE300
15	23,8	31,5	HE300
16	25,4	33,1	HE300
17	27,0	34,7	HE400
18	28,6	36,3	HE400
19	30,2	37,9	HE400
20	31,8	39,5	HE400
21	33,3	41,1	HE400
22	35,0	42,7	HE400
23	36,5	44,3	HE400
24	38,1	45,9	HE400

TABLE 3

SPRING REF	J MAX (UNCONSTRAINED)
HE 050	7,5
HE 100	9,1
HE 200	12,8
HE 300	17,9
HE 400	21,8

TABLE 4

CODE	MATERIAL / FINISH
1-C	ALUMINIUM / ELECTROLESS NICKEL
1-B	ALUMINIUM / CADMIUM OLIVE DRAB OVER ELECTROLESS NICKEL
1-ZB	ALUMINIUM / ZINC COBALT OLIVE DRAB OVER ELECTROLESS NICKEL
1-ZN	ALUMINIUM / ZINC NICKEL BLACK PASSIVATE OVER ELECTROLESS NICKEL
4-J	STAINLESS STEEL / PASSIVATE

SEE SS0076 FOR FULL RANGE OF FINISH OPTIONS

91A1-16-08-1-C-HE200

- SERIES
- CONNECTOR INTERFACE
- ANGLE
- SHELL SIZE (TABLE 1)
- ENTRY SIZE (TABLE 2)
- MATERIAL (TABLE 4)
- FINISH (TABLE 4)
- SPRING REF. (TABLE 3)

SPRING REFERENCE NOT INCLUDED IN PART MARKING
e.g 91A1-16-08-1-C [BATCH NUMBER]

DRAWN	R. CL	DATE 09/05/2018	3RD ANGLE PROJECTION NOT TO SCALE	PART NUMBER: 91A SERIES
SALES APPR	M.PAUL	09/05/2018		
DESIGN APPR	K.SHEPPARD	09/05/2018	UNLESS OTHERWISE SPECIFIED ALL DIMENSIONS IN MILLIMETRES **GENERAL TOL** LINEAR +/-0,25MM ANGULAR +/- 1°	TITLE: SPRING TERMINATION BACKSHELL
PROD APPR	K.,SMITH	09/05/2018		POLAMCO
QUAL APPR	P.REES	05/09/2018	**MATERIAL** SEE PART NUMBER BREAKDOWN	ASSY USED ON:
ISSUE/REV AA	CRN 26424		**FINISH** SEE PART NUMBER BREAKDOWN	
NCAGE CODE U5792	WEIGHT			

THIS DRAWING IS COPYRIGHT AND THE PROPERTY OF POLAMCO LTD IT MUST NOT BE COPIED, USED FOR MANUFACTURE OR OTHERWISE DISCLOSED WITHOUT PRIOR WRITTEN CONSENT OF THE COMPANY.

POLAMCO LTD, WESTON LOCK, LOWER BRISTOL ROAD BATH BA2 1EP

SHT 2

DRAWING NO: P11306

Downloaded from Arrow.com.