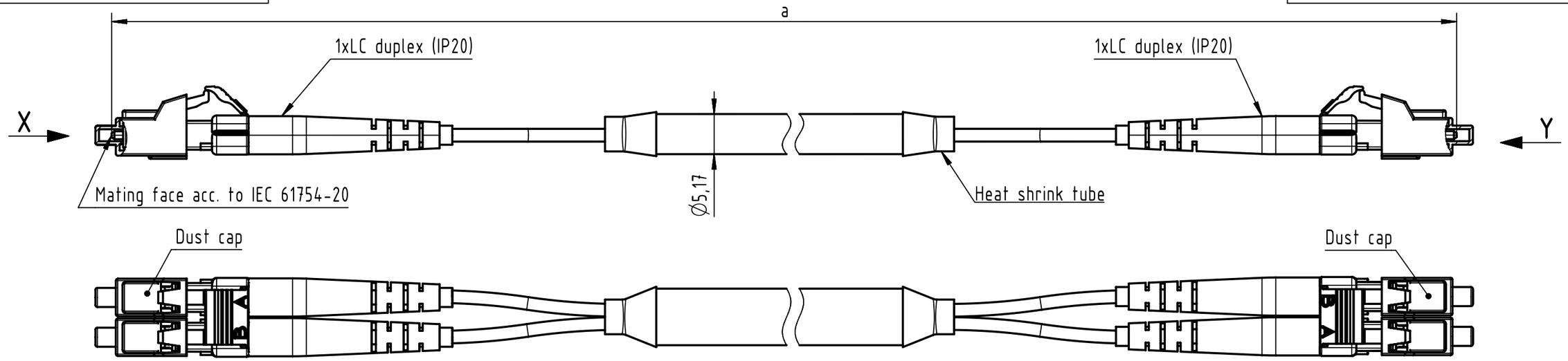


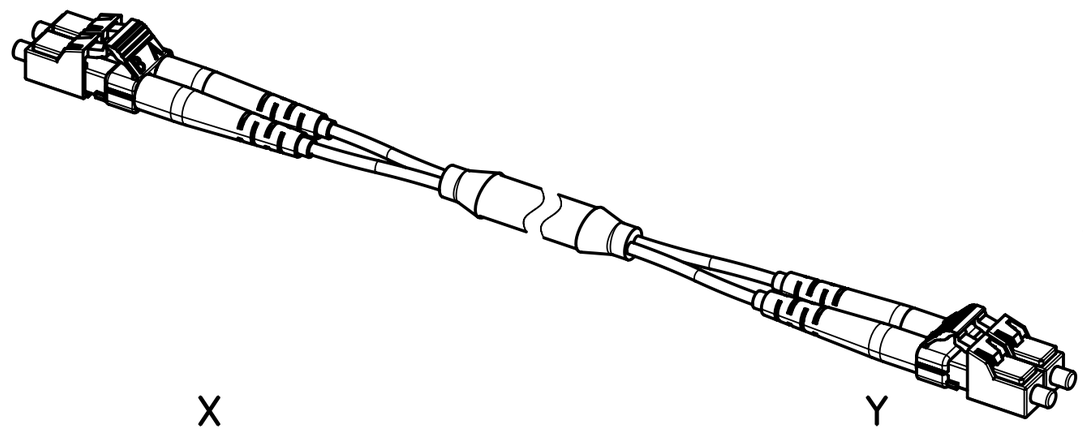

X
male
(without dust caps)

Y
male
(without dust caps)

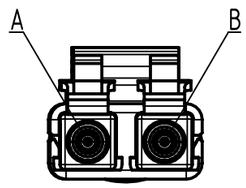


Loading Plan

A — red — B

B — green — A

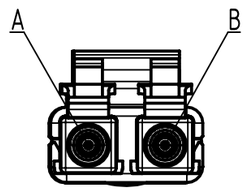


| Cont. no. | Part no. | Type of cable | Dim. a[m] |
|---|---|---|---|
| 18 | 33012411200005 | FO multimode cable, 50/125µm | 120 |
| 17 | 33012411000005 | | 100 |
| 16 | 33012410600005 | | 60 |
| 15 | 33012410500005 | | 50 |
| 14 | 33012410300005 | | 30 |
| 13 | 33012410200005 | | 20 |
| 12 | 33012410150005 | | 15 |
| 11 | 33012410100005 | | 10 |
| 10 | 33012410090005 | | 9 |
| 9 | 33012410080005 | | 8 |
| 8 | 33012410070005 | | 7 |
| 7 | 33012410060005 | | 6 |
| 6 | 33012410050005 | | 5 |
| 5 | 33012410040005 | | 4 |
| 4 | 33012410030005 | | 3 |
| 3 | 33012410020005 | | 2 |
| 2 | 33012410010005 | | 1 |
| 1 | 33012430500005 | | 0.5 |

All Dimensions in mm | Tech. Character. | Free size tol. | According to production drawing

All rights reserved

Department HCS - RO

HARTING Customised Solutions
D-32339 Espelkamp

| Created by | Inspected by | Standardisation | Date | State |
|---|---|---|---|---|
| BANCIUD Banciu | 402676 Gross | MUNTEANV Muntean | 2020-08-19 | Final Release |

Title: FO JUMPER CAB. ASSY 2x LC Duplex MM

Doc-Key / ECM-Nr.: 100210841/UGD/008/F 500000178136

Type: TB | Number: 330124XXXX0005 | Rev.: F | Page: 1/1

A3

Downloaded from Arrow.com.