Extraction Tool 2063388-1

PROPER USE GUIDELINES

Cumulative Trauma Disorders can result from the prolonged use of manually powered hand tools. Hand tools are intended for occasional use and low volume applications. A wide selection of powered application equipment for extended-use, production operations is available.

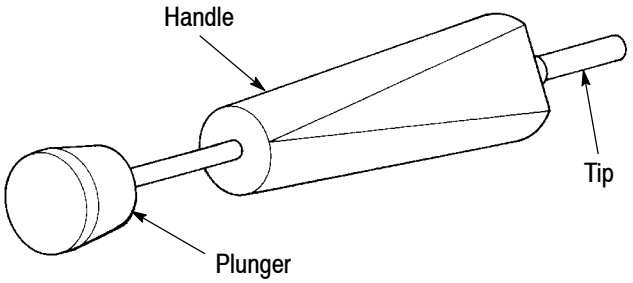

PART NUMBERS			
FOR MINIATURE RECTANGULAR (MR) CONTACTS			
PIN		SOCKET	
STRIP	LP	STRIP	LP
350018	350036	350019	350037
350171	350197	350184	350186
350183	350185	350665	350666
350663	350664	350696	350697
350684	350685	---	---
350694	350695	---	---
350968	640579	641294	641300
350967	640545	---	---
FOR MINIATURE UNIVERSAL MATE-N-LOK* CONTACTS			
PIN		SOCKET	
STRIP	LP	STRIP	LP
170359	170363	170361	170365
170360	170364	170362	170366
171636	171638	171637	171639
FOR COMMERCIAL PIN .062 CONTACTS			
STRIP		LP	
350629		---	
640391		---	

Figure 1

1. INTRODUCTION

Extraction Tool 2063388-1, Figure 1, is designed to remove Miniature Rectangular (MR) contacts, Miniature Universal MATE-N-LOK contacts, or Commercial .062 pin contacts from the housings designed for these contacts. Information for the removal of Commercial .062 socket contacts with Extraction Tool 844134-1 can be found on Instruction Sheet 408-9501. The pin and socket contacts are listed by part number in Figure 1. Read these instructions thoroughly before attempting to remove any contacts from the housings.

NOTE

Dimensions on this sheet are in millimeters [with inch equivalent dimensions in brackets]. Figures and illustrations are for identification only and are not drawn to scale.

2. DESCRIPTION

The tool consists of a metal tip and a plastic handle. The tip is inserted into the mating face of the housing, depressing the locking lances of the crimped contact. This action allows the contact to be extracted from the wire-entry face of the housing.

3. EXTRACTION PROCEDURE

The procedures which follow are recommended to extract a crimped contact from a housing. See Figures 2 and 3.

Proceed as follows:

1. Grasp wire of contact to be removed. Push contact toward mating face of connector and hold in this position. This will disengage contact locking lance from shoulder of cavity.

2. While holding wire, place tool releasing barrel over end of contact and push straight into cavity until it bottoms. The locking lance is now released.

3. Keep releasing barrel firmly bottomed in cavity and depress plunger (handle). Contact will partially eject.

NOTE

If difficulty is encountered in pushing contact forward, Insertion Tool 91002-1 (tweezer type), may be used to perform the task from the wire side of the housing.

4. Pull contact from BACK of connector and remove tool from cavity.

NOTE

Before inserting contact into housing, reset locking lances to their original positions. Consult the Customer Drawing covering the specific contact removed (or consult TE Connectivity Engineering) for correct setting of locking lances.

©2011 Tyco Electronics Corporation, a TE Connectivity Ltd. Company
All Rights Reserved
TE Connectivity, TE connectivity (logo), and TE (logo) are trademarks.
*Trademark. Other logos, product and/or Company names may be trademarks of their respective owners.

TOOLING ASSISTANCE CENTER 1-800-722-1111
PRODUCT INFORMATION 1-800-522-6752

This controlled document is subject to change.
For latest revision and Regional Customer Service, visit our website at **www.te.com**

Downloaded from Arrow.com.

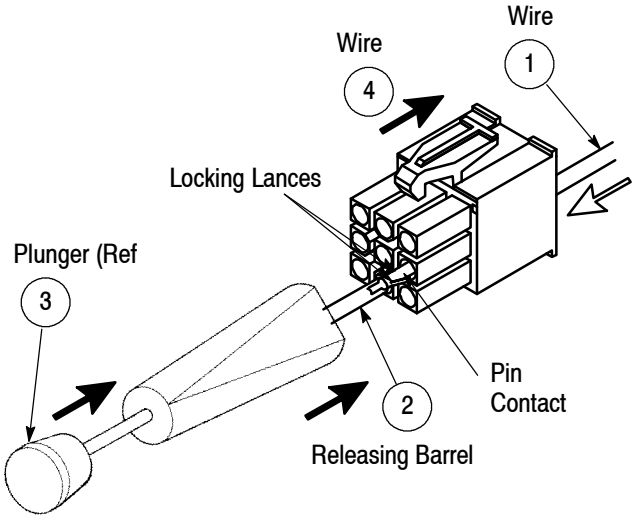

Figure 2

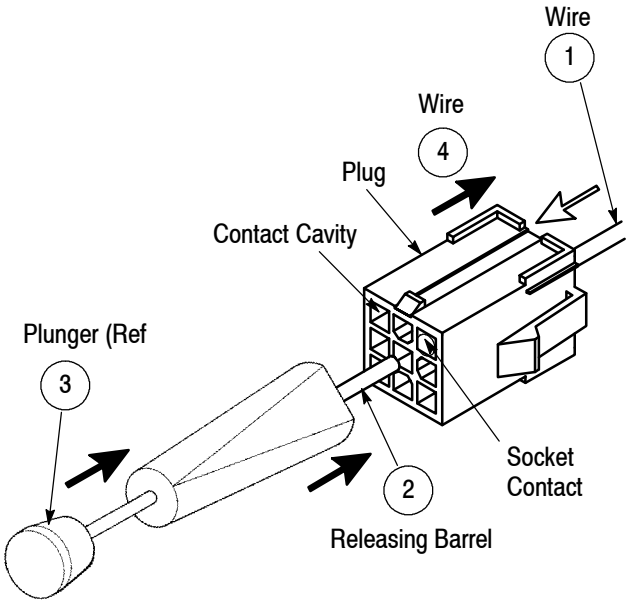

Figure 3

4. MAINTENANCE AND INSPECTION

To ensure proper operation, the tool should conform to the dimensions provided in Figure 4. It is recommended that the tool be inspected immediately on its arrival and at regularly scheduled intervals. The tool is not repairable and should be replaced when worn or damaged. It is recommended that the tool be stored in a clean, dry place and cleaned with a soft, lint-free cloth.

Additional tools can be purchased from:

TYCO ELECTRONICS CORPORATION
CUSTOMER SERVICE (38-35)
P. O. BOX 3608
HARRISBURG, PA 17105-3608

5. REVISION SUMMARY

- Updated document to corporate requirements.

NOTE: Not to Scale

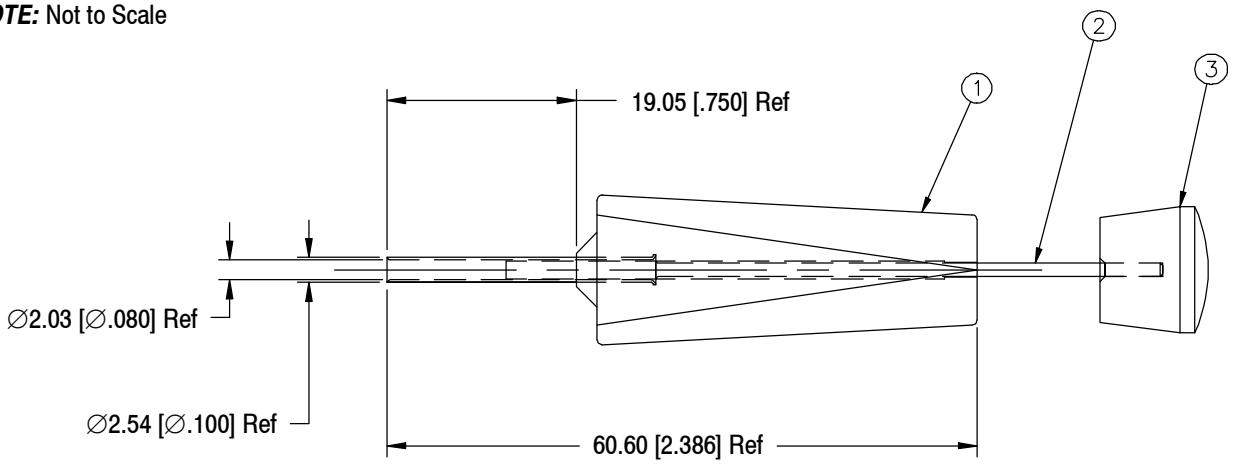

Figure 4

Downloaded from Arrow.com.