UltraCP™ MYC0409-NA

Document Category: Datasheet

Ultra-thin High Efficiency 72W DCDC Converter Module

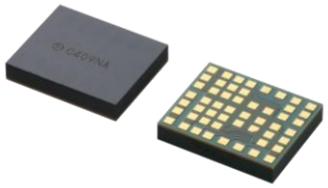

Product Description

MYC0409-NA is an Ultra-thin High Efficiency integrated power solution which combines a 72W DC-DC converter with components. This total power solution can be used in a system without loop compensation and with just three external components in the minimum case.

This fully integrated module provides up to 96.5% efficiency despite its small and thin 11.5 x 9.5 x 2.0mm LGA package. Murata's easy-to-use module pinout design allows simple power layout and maximizes efficiency by minimizing routing parasitic resistance.

This module is fixed divide-by-4 conversion ratio from input voltage to output voltage. Input voltage range of 20V to 60V supports 48V bus systems.

- Wide input voltage
  20V to 60V (DIV4)
- Suitable for 48V bus systems
- Efficiency up to 96.5%
  Up to 95.0% efficiency with 48V_{IN}/6A
- Up to 6A
- Ultra-thin/small 11.5 x 9.5 x 2.0mm LGA package. (T=2.1mm(max.))

Features

- Open drain power-good output
- Over-current and over-temperature protections
- Compensation loop-less charge pump
- Synchronizes to an external clock
- Stackable up to 4 modules

Typical Applications

- Data center/server
- Networking equipment
- Base station
- Optical equipment
- Test equipment
- LED signage

Efficiency

T_A = 25degC

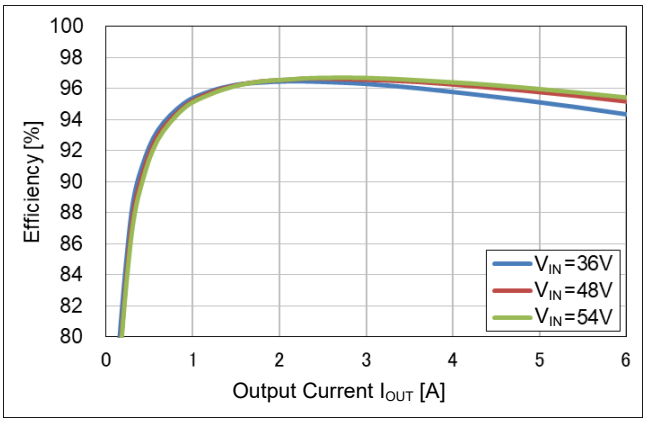

Figure 1. Efficiency Curve

Simplified Application

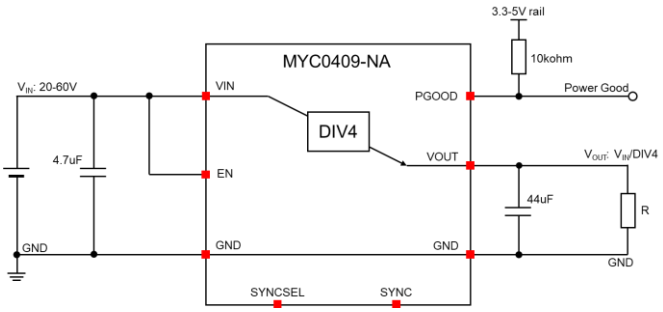

Figure 2. Simplified Circuit Diagram

Copyright ©2026 Murata Manufacturing Co., Ltd. All rights reserved.
Specifications are subject to change without notice.

Downloaded from Arrow.com.

Table of Contents

Product Description 1
Features 1
Typical Applications 1
Efficiency 1
Simplified Application 1
Performance Specifications Summary and Ordering Information 3
Top Marking Specification 3
Absolute Maximum Ratings 4
Recommended Operating Conditions 4
Package Thermal Characteristics 4
Electrical Characteristics 5
Electrical Characteristics Table 5
Pin Configuration 7
Pin Description 7
Functional Block Diagram 8
Application Circuit 8
Typical Performance Characteristics 9
Thermal Deratings (Reference Data) 11
Detailed Description 12
Start-up – EN, V_{IN} Relationship. 12
Enable (EN) 13
Input Under-voltage Lockout (UVLO) 13
Pre-charge Operation 13
Soft-start Operation 13
PGOOD Operation 14
External/Internal Clock Modes and SYNCSEL Pin 16
Protections 16
V_{IN} Under-voltage and Thermal Shutdown Faults 17
I_{OUT} Overcurrent Protection 17
V_{OUT} Under-voltage Protection 17
Soft-start Timeout 17
PGOOD Low Detection 18
Application Information 18
Charge Pump Architecture Basics 18
Application Performance 20
Application Schematic 20
Application Circuit Part List 21
Application Board Example 21
Component Selection 22
Input Capacitor 22
Output Capacitor 22
Input Fuse 22
Application Schematic with Secondary 22
Parallel Operation 23
Current and Thermal Balance 23
Pin Connections for Parallel Operation 23
Charge Pump Architecture and Important Notice 25
Hard Short Circuit Condition 25
Soft-start and Capacitors Charge Balancing 26
Reverse Direction Current Flow and Operation 26
Input Voltage Transient 26
Packaging Information 27
Package Drawing 27
Recommended Board Land Pattern 28
Tape and Reel Specification 29
Soldering Guidelines 31
Revision History 32
Notices 33
Scope 33
Limitation of Applications 33
Storage 34
Fail-safe function 34
Product Specification 34
Contact Form 35
Disclaimers 35
Patent Statement 35
Copyright and Trademark 35

Copyright ©2026 Murata Manufacturing Co., Ltd. All rights reserved.
Specifications are subject to change without notice.

Downloaded from Arrow.com.

Performance Specifications Summary and Ordering Information

Table 1. Performance Specifications Summary and Ordering Information

PART NUMBER	OUTPUT		INPUT			Efficiency [%]	EN	Package [mm]	Making	MSL	Quantity
	V_{OUT} [V]	I_{OUT} (max.) [A]	V_{IN} (typ.) [V]	RANGE [V]	I_{IN} full load [A]						
MYC0409-NA	V_{IN}/DIV4	6.0	48	20-60	1.5	95	Yes (Positive)	11.5 x 9.5 x 2.0 LGA	C409NA	3	400 units /Tape &Reel
NRND MYC0409-NA-D	V_{IN}/DIV4	6.0	48	20-60	1.5	95	Yes (Positive)	11.5 x 9.5 x 2.0 LGA	C409NA	3	100 units /Tape &Reel

Table 2. Part Numbering

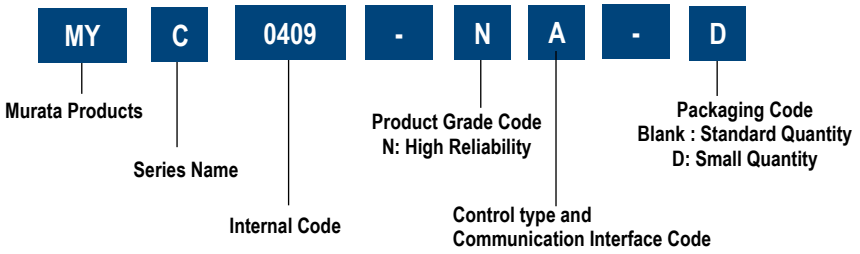

Top Marking Specification

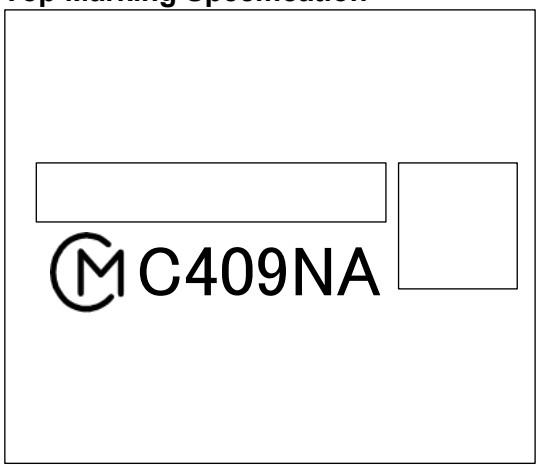

CODES	DESCRIPTION
Ⓜ	Pin 1 marking (Murata Manufacturing ID)
C409NA	Product code
	Internal manufacturing code

Figure 3. Top Marking Specification

Copyright ©2026 Murata Manufacturing Co., Ltd. All rights reserved.
Specifications are subject to change without notice.

Downloaded from Arrow.com.

Absolute Maximum Ratings (1)

Table 3. Absolute Maximum Ratings

PARAMETER	MIN	MAX	UNITS
VIN	-0.3	61	V
EN	-0.3	V_{IN}+0.3	V
SYNC, SYNCSEL, PGOOD	-0.3	5.5	V
VOUT	-0.3	V_{IN}/4 +0.1	V
Output Current (I_{OUT})	0	8	A
Storage Temperature (T_{STG})	-40	125	degC
Soldering / Reflow Temperature(2)	-	260	degC
Maximum Number of Reflows Allowed(2)	-	2	-
ESD Tolerance, HBM	-	1000	V

Notes:
(1) The application of any stress beyond those listed under "Absolute Maximum Ratings" may cause permanent damage to the device, and exposure at any of these ratings for extended periods may reduce the reliability of the device. The above "Absolute Maximum Ratings" are stress ratings only; the notation of these conditions does not imply functional operation of the device at these or any other conditions that fall outside of the range identified by the operational sections of this specification.
(2) Recommended reflow profile is written in "Soldering Guidelines".

Recommended Operating Conditions (1)

Table 4. Recommended Operating Conditions

PARAMETER	MIN	MAX	UNITS
Input Voltage (V_{IN})	20	60	V
Ambient Temperature (T_A) (2)	-40	105	degC
Junction Temperature (T_J) (2)	-40	120	degC
Output Current (I_{OUT})	0	6	A

Notes:
(1) Device should not be operated outside the operating conditions. The reliability is tested at the maximum voltage of the recommended operating condition. Above of recommended operation may reduce reliability of the device.
(2) See the temperature derating curves in the thermal deratings. However, do not condensate.

Package Thermal Characteristics (1,2)

Table 5. Package Thermal Characteristics

PARAMETER		TYPICAL	UNITS
Θ_{jct}	Junction-case-top at Heat Junction	15.9	degC/W
Θ_{jcb}	Junction-case-bottom at Heat Junction	4.7	degC/W

Notes:
(1) Package thermal characteristics and performance are measured and reported in a manner consistent with the JEDEC standards JESD51-8 and JESD51-12.
(2) Junction-to-Ambient Thermal Resistance (Θ_{JA}) is a function not only of the IC, but it is also extremely sensitive to the environment which includes, but is not limited to, board thickness, planes, copper weight / routes, and air flow. Attention to the board layout is necessary to realize expected thermal performance

Copyright ©2026 Murata Manufacturing Co., Ltd. All rights reserved.
Specifications are subject to change without notice.

Downloaded from Arrow.com.

Electrical Characteristics (1)

Electrical Characteristics Table

V_{IN} = 48V, I_{OUT} = 6A, T_A = 25degC, unless otherwise noted

Table 6. Electrical Characteristics Table

PARAMETER	SYMBOL	CONDITIONS	MIN	TYPICAL	MAX	UNITS
INPUT SUPPLY						
Input Voltage	V_{IN}		20	-	60	V
V_{IN} Start-up Slew Rate(2)	V_{IN_SR}		0.2	-	-	V/ms
V_{IN} Under Voltage Lockout Threshold, V_{IN} Rising	V_{IN_UVH}	I_{OUT} = 0A	-	18.1	-	V
V_{IN} Under Voltage Lockout Hysteresis	V_{IN_UVL}	I_{OUT} = 0A	-	0.9	-	V
V_{IN} Switching Supply Current	I_{IN_SW}	V_{IN} = 48V, No load	-	11	-	mA
V_{IN} Shutdown Supply Current	I_{IN_SD}	V_{IN} = 48V, EN = 0V	-	0.15	-	uA
ENABLE INPUT (EN PIN)						
Enable Threshold High(2)	V_{TH_ENH}		2.6	-	-	V
Enable Threshold Low(2)	V_{TH_ENL}		-	-	0.6	V
Enable Input Rising Duration(2)	t_{R_EN}	0V to V_{TH_ENH}	-	-	1	ms
Enable Pin Input Current	I_{EN}	EN = V_{IN} = 48V, T_A = 125degC, No Load	-	42	-	uA
POWER GOOD (PGOOD PIN)						
PGOOD Output Pulldown Low Level(2)	V_{PG_LOW}	I_{PG} = 20mA	-	-	0.25	V
PGOOD Input High Voltage(2)	V_{PGH}		3.0	-	-	V
PGOOD V_{OUT} Threshold	V_{TH_PGH}	V_{OUT} rising, No fault	-	0.95* V_{IN}/4	-	V
PGOOD Released V_{OUT} Threshold	V_{TH_PGL}	V_{OUT} falling after PGOOD=H	-	0.8* V_{IN}/4	-	V
SYNCSEL PIN						
Threshold Low(2)	V_{TH_SYNL}		-	-	0.4	V
OUTPUT						
Efficiency Peak	EFF_{PK}	V_{IN} = 48V, I_{OUT} = 2.4A	-	96.5	-	%
Efficiency Full Load	EFF_{FULL}	V_{IN} = 48V, I_{OUT} = 6A	-	95.0	-	%
Switching Frequency	f_{SW}		-	270	-	kHz
Soft Start Input Current Limit(3)	I_{IN_SS}		-	134	-	mA
Soft Start Timeout Duration(3)	t_{TO_SS}		-	100	-	ms
Output Current (Continuous)(3)	I_{OUT}	Inside recommended OP range	-	-	6	A
Output Current (Start-up)(3)	I_{OUT_START}		-	-	20	mA
Output Voltage	V_{OUT}	V_{IN} = 48V, Full load condition, DC	-	96%* V_{IN}/4	-	V
Equivalent Output Resistance(4)	R_{OUT}	V_{IN} = 48V, I_{OUT} = 6A		0.08		ohm
Total External Output Capacitance(2)	C_{OUT}		44	-	400	uF
Total External Output Capacitance with Parallel Operation(2)	C_{OUT_P}	n=Parallel devices numbers	44*n	-	400	uF

Copyright ©2026 Murata Manufacturing Co., Ltd. All rights reserved.
Specifications are subject to change without notice.

Downloaded from Arrow.com.

Electrical Characteristics Table

V_{IN} = 48V, I_{OUT} = 6A, T_A = 25degC, unless otherwise noted

Table 6. Electrical Characteristics Table

PARAMETER	SYMBOL	CONDITIONS	MIN	TYPICAL	MAX	UNITS
PROTECTION						
Thermal Shutdown Threshold(2)	T_{TH_OTP}	Temperature rising	125	150	-	degC
Thermal Shutdown Hysteresis	T_{HYS_OTP}		-	16	-	degC
Over Current Protection	I_{TH_OCP}		-	10	-	A
Short Circuit Protection	I_{TH_SHORT}		-	15	-	A
ENVIRONMENTAL						
Moisture Sensitivity Level	MSL			3		

Notes:
(1) Min/Max specifications are 100% production tested at T_A = 25degC, unless otherwise noted. Limits over the operating range are guaranteed by design.
(2) Guaranteed by design.
(3) Load currents may cause start-up failure due to Soft-start timeout fault. Devices supplied power from this device should be started up after the PGOOD signal becomes high state.
(4) $R_{OUT} = (V_{IN}/4-V_{OUT})/I_{OUT}$

Copyright ©2026 Murata Manufacturing Co., Ltd. All rights reserved.
Specifications are subject to change without notice.

Downloaded from Arrow.com.

Pin Configuration

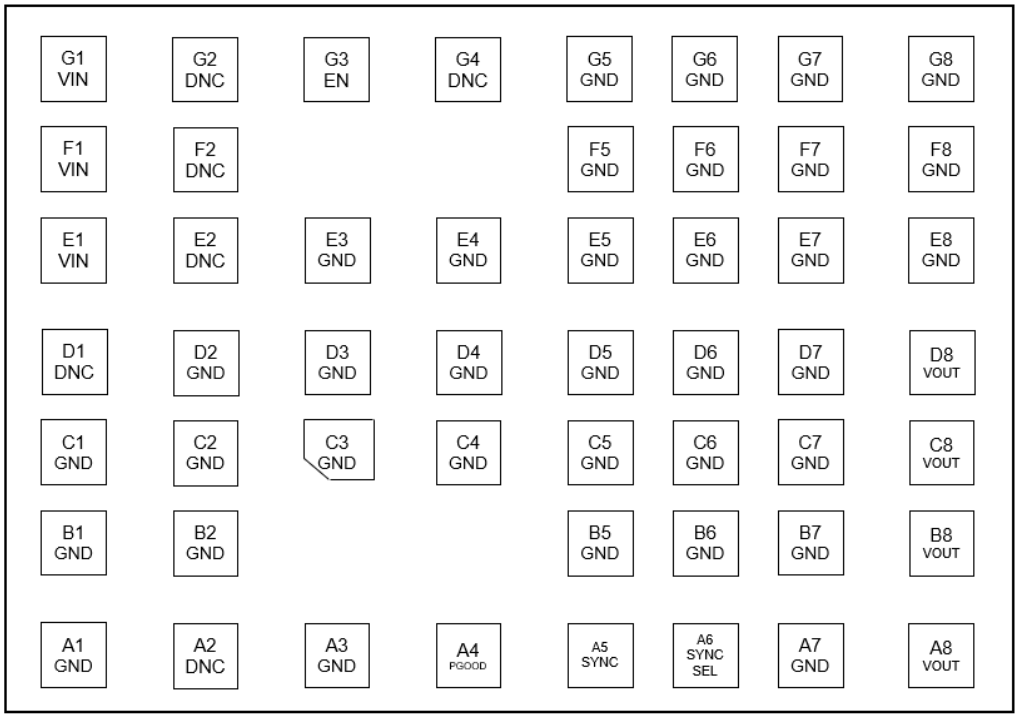

Figure 4. Module Terminals (Top View)

Pin Description

Table 7. Pin Description

PIN No.	NAME	DESCRIPTION
A1, A3, A7, B1, B2, B5-7, C1-7, D2-7, E3-8, F5-8, G5-8	GND	Ground for power and thermal. Please connect ground plane in low impedance.
E1, F1, G1	VIN	Power input terminal
A8, B8, C8, D8	VOUT	Power output terminal
G3	EN	Part enable terminal. Do not leave this terminal open. HIGH = ON / LOW = OFF
A5	SYNC	CLOCK IN / OUT terminal. Direction is configurable by SYNCSEL terminal potential.
A6	SYNCSEL	SYNC terminal control. LOW = CLKOUT, OPEN = CLKIN.
A4	PGOOD	Power good terminal. Connect a 10kohm resistor from PGOOD to an external bus voltage between 3.0V and 5.5V.
A2, D1, E2, F2, G2, G4	DNC	Do not connect pins electrically. Those pins must connect to the board with solder but must be left floating electrically each other.

Copyright ©2026 Murata Manufacturing Co., Ltd. All rights reserved.
Specifications are subject to change without notice.

Downloaded from Arrow.com.

Functional Block Diagram

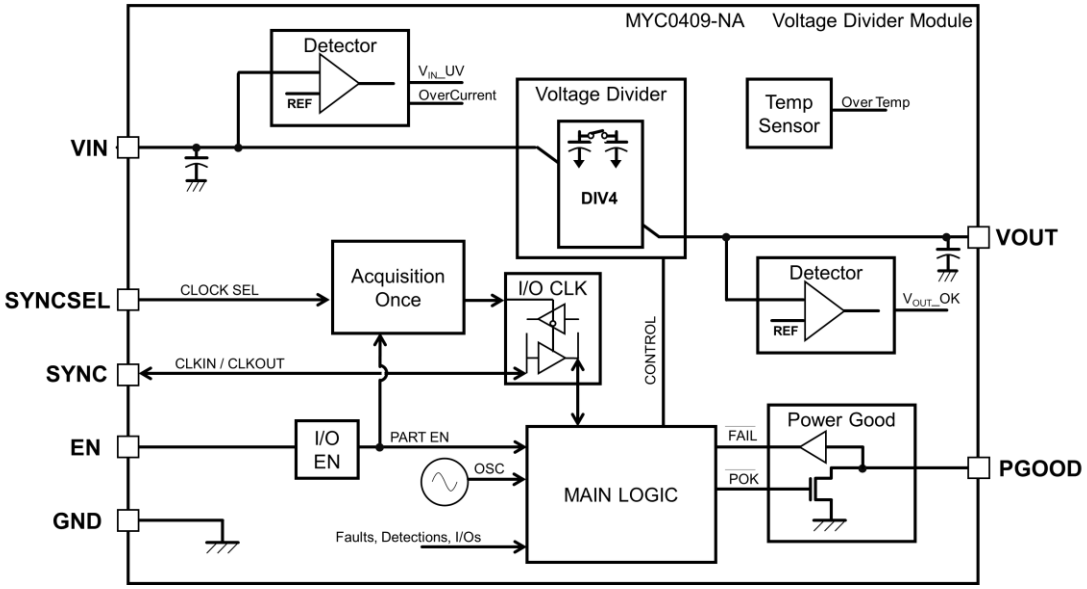

Figure 5. Functional Block Diagram

Application Circuit

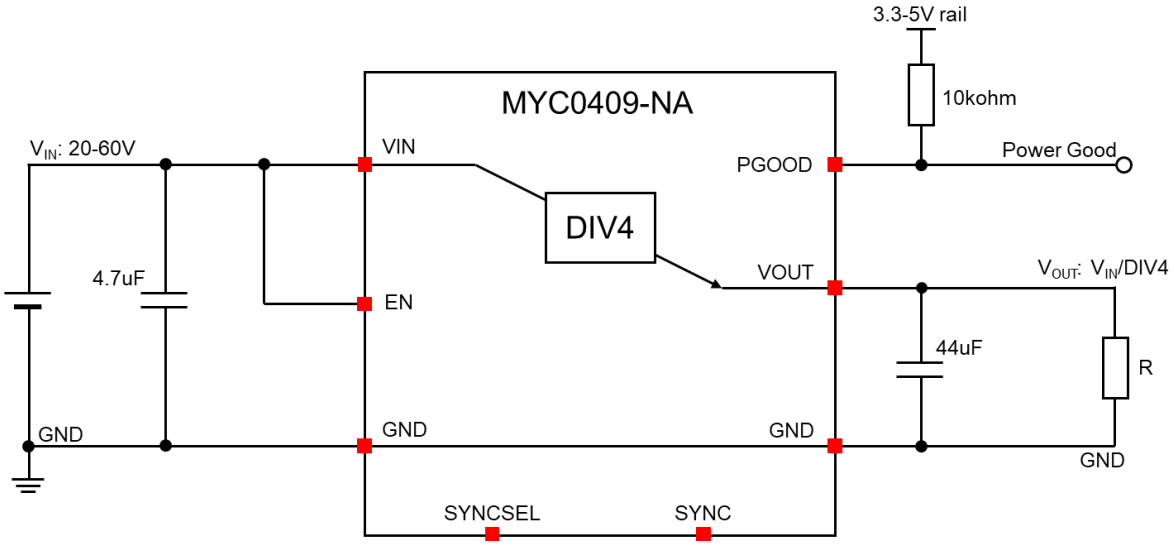

Figure 6. Application Circuit

Copyright ©2026 Murata Manufacturing Co., Ltd. All rights reserved.
Specifications are subject to change without notice.

Downloaded from Arrow.com.

Typical Performance Characteristics

In this document, all characteristics are measured with the application board which is shown in Figure 26. The schematic and part list of the board are shown in Figure 25 and Table 11. The board is under T_A =25degC with no airflow unless otherwise noted.

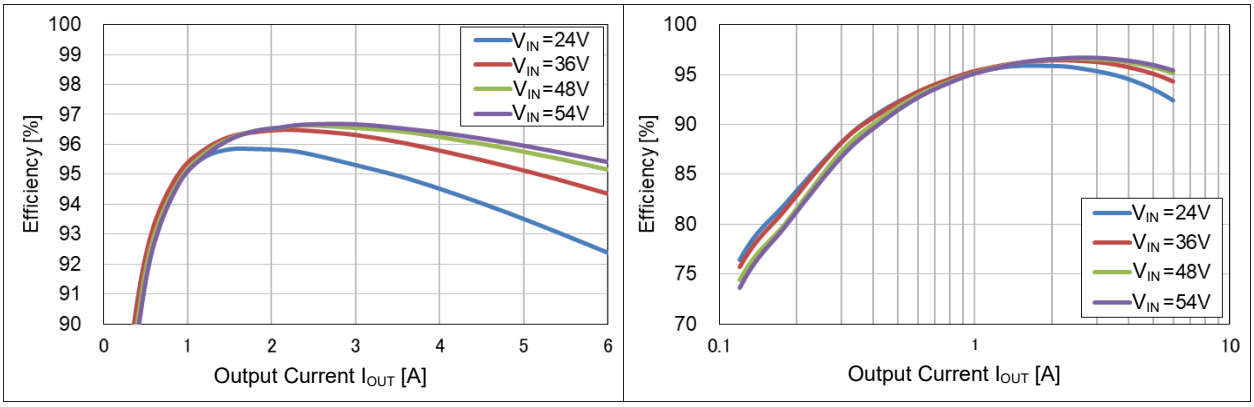

Figure 7. Efficiency (Linear, Log scale)

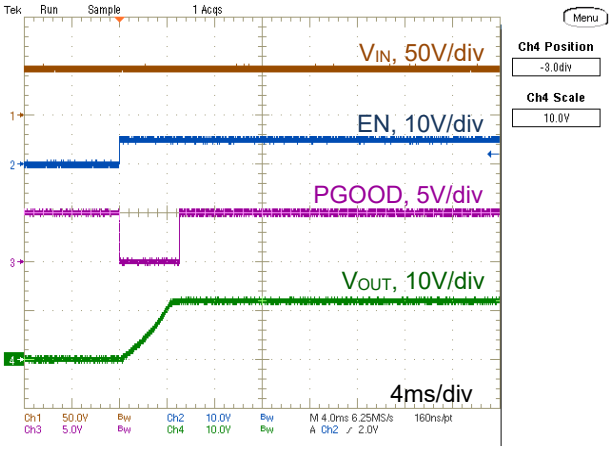

(V_{IN} = 48V, I_{OUT} = 0A, T_A = 25degC, C_{OUT} = 44uF)
Figure 8. Start-up Waveform

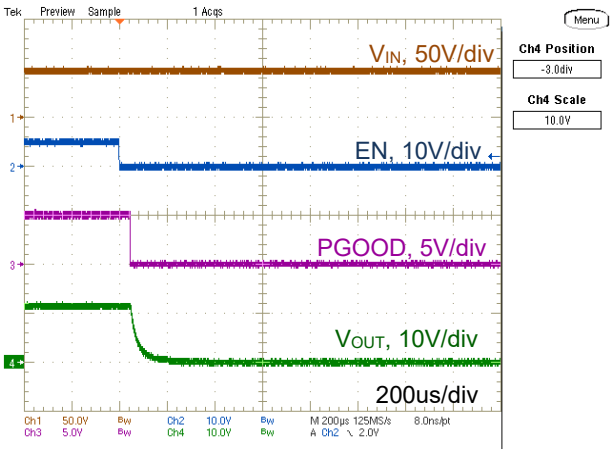

(V_{IN} = 48V, I_{OUT} = 6A, T_A = 25degC, C_{OUT} = 44uF)
Figure 9. Shutdown Waveform

Copyright ©2026 Murata Manufacturing Co., Ltd. All rights reserved.
Specifications are subject to change without notice.

Downloaded from Arrow.com.

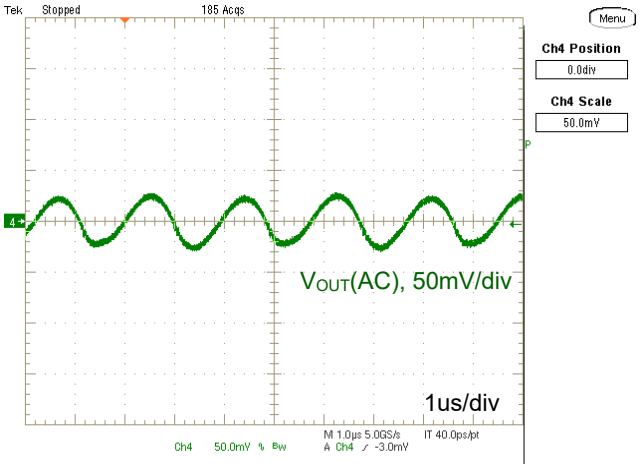

(V_{IN} = 48V, I_{OUT} = 6A, T_A = 25degC, C_{OUT} = 44uF)
Figure 10. V_{OUT} Ripple Waveform

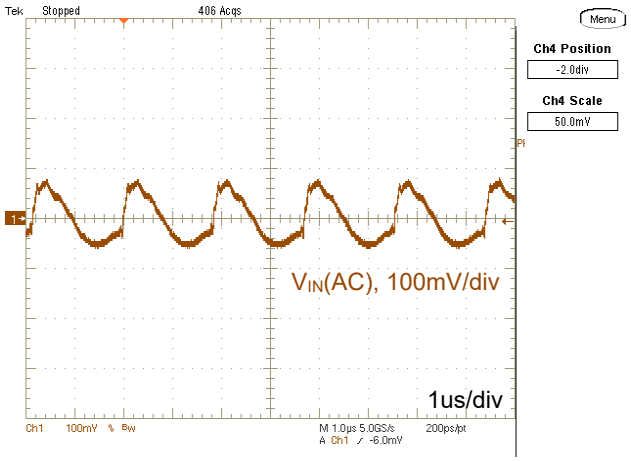

(V_{IN} = 48V, I_{OUT} = 6A, T_A = 25degC, $C_{IN}2$ = 9.4uF)
Figure 11. V_{IN} Ripple Waveform

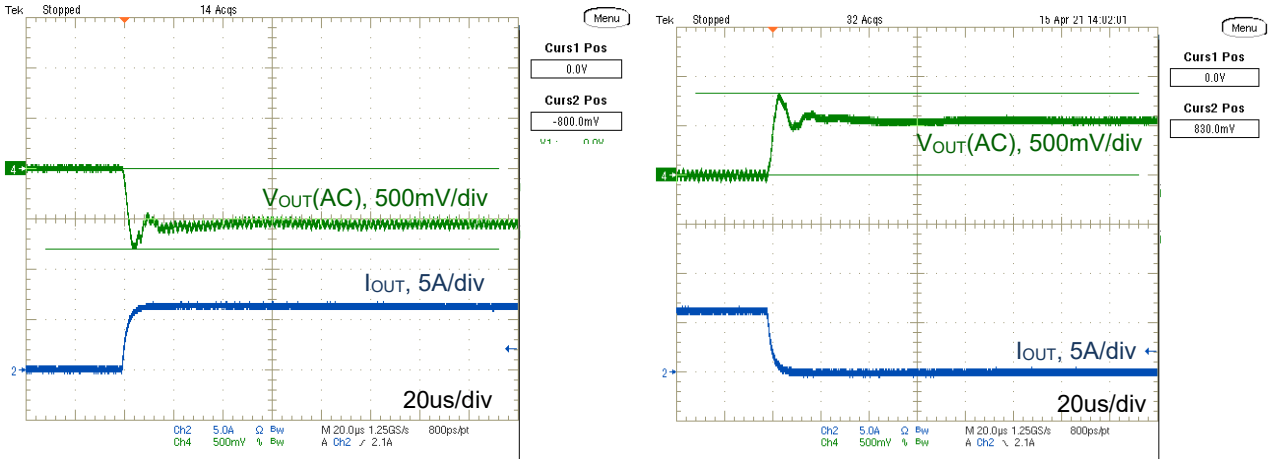

(V_{IN} = 48V, I_{OUT} = 0 to 6A, 1A/us, T_A = 25degC, C_{OUT} = 44uF)
Figure 12. Load Transient Response Waveform

Copyright ©2026 Murata Manufacturing Co., Ltd. All rights reserved.
Specifications are subject to change without notice.

Downloaded from Arrow.com.

Thermal Deratings (Reference Data)

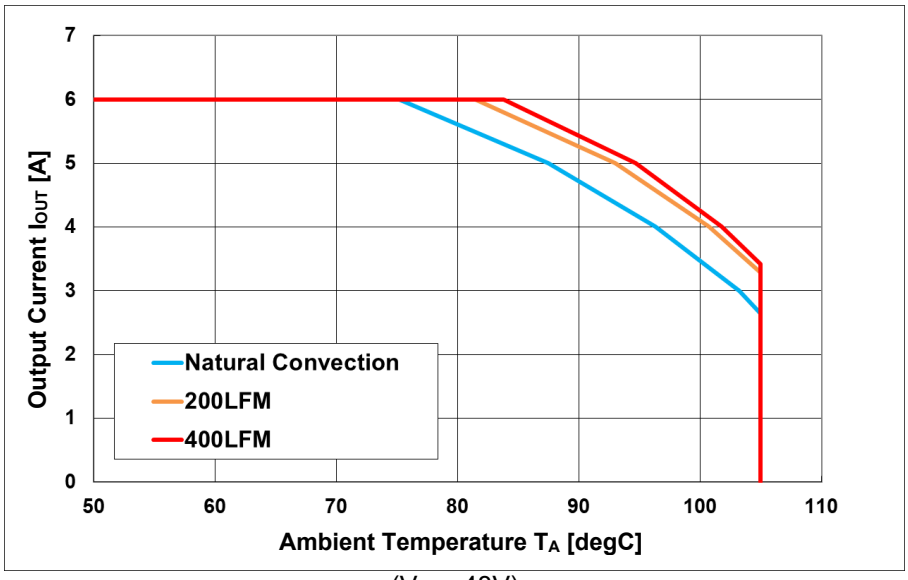

(V_{IN} = 48V)

Figure 13. Thermal Deratings

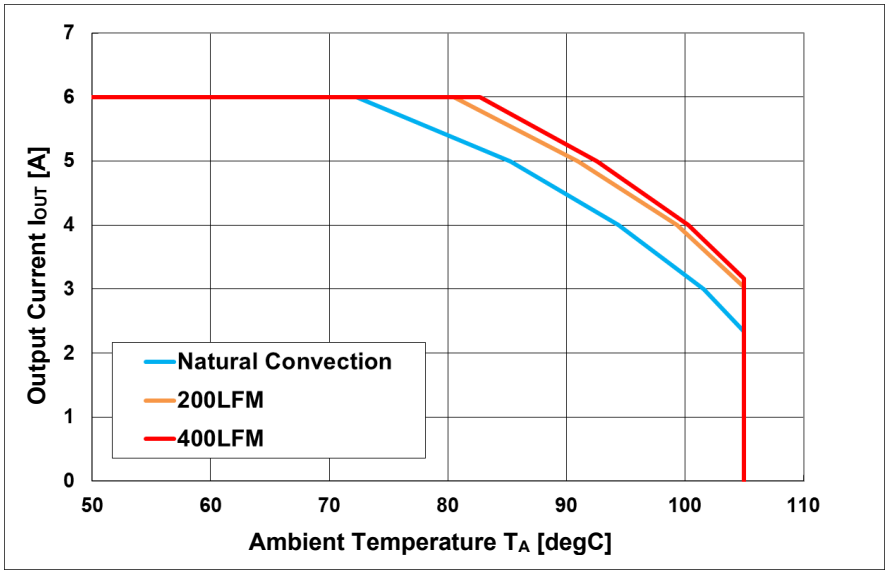

(V_{IN} = 54V)

Figure 14. Thermal Deratings

The thermal deratings are evaluated in following conditions.

・The product is mounted on 114.5 x 101.5 x 1.6mm (Layer1, 4: 2oz copper / Layer2, 3: 1oz copper) FR-4 board. Surface temperature of the product: 116degC (max.)

Copyright ©2026 Murata Manufacturing Co., Ltd. All rights reserved.
Specifications are subject to change without notice.

Downloaded from Arrow.com.

Detailed Description

The MYC0409-NA is a divide-by-4, two-phase charge pump-based DC-DC converter, so any change in input voltage will be reflected at the output. The MYC0409-NA can be powered from input voltage ranges from 20V to 60V. The output voltage range supported is 5V to 15V with load currents of 6A

The SYNCSEL pin can be tied to ground or by leaving it floating, If tied to ground then the device will use an internal clock and this clock signal will appear at the SYNC pin. If left floating, then the SYNC pin will act as an input. Please refer to Table 7 for details. The pin configurations are sampled when the MYC0409-NA starts up and before the charge pump stage is enabled. The configuration pins are not designed to be driven dynamically, so they should be in a fixed state at power up.

Start-up – EN, V_{IN} Relationship.

The MYC0409-NA has an enable input pin, EN, which is designed to be compatible with typical low-voltage digital I/O levels so that it can be easily driven by an external controller. EN can be also connected to the VIN pin. If external power sequencing or control is not required, EN should be tied to V_{IN} and not left open.

If the EN pin is held low until V_{IN} has reached its nominal voltage, the MYC0409-NA follows the initialization sequence shown in Figure 15.

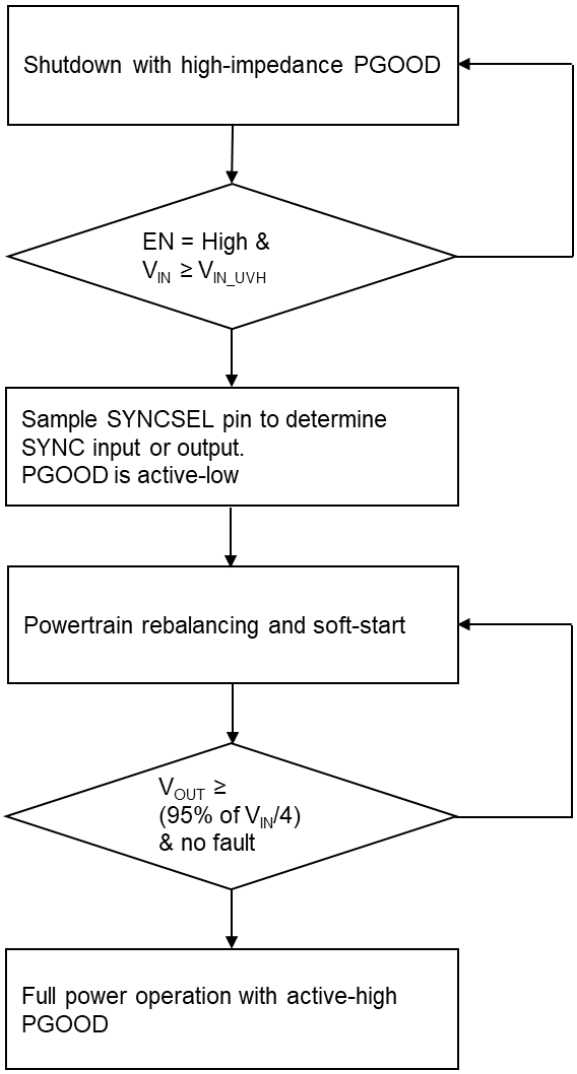

Figure 15. Initialization Sequence

Copyright ©2026 Murata Manufacturing Co., Ltd. All rights reserved.
Specifications are subject to change without notice.

Downloaded from Arrow.com.

Enable (EN)

The MYC0409-NA is enabled by an active-high EN input pin when the voltage higher than 2.6V is applied. The MYC0409-NA is disabled when the voltage at the EN pin falls below 0.6V. The EN pin can be shorted to the V_{IN} pin to automatically enable the part with a minimal number of external components and PCB routing. When multiple MYC0409-NAs are used in parallel, all their EN pins must be connected to a single enable signal. Scope plots showing the enable and disable behavior are shown in figure 8 and figure 9.

Input Under-voltage Lockout (UVLO)

The MYC0409-NA provides continuous monitoring of the V_{IN} input using a fixed under-voltage lockout threshold. The MYC0409-NA is enabled when the V_{IN} voltage rises above 18.1V typical. When the V_{IN} falls below the fixed under-voltage lockout threshold minus additional 0.9V hysteresis, charge pump switching is disabled.

Pre-charge Operation

Before enabling the soft-start switching sequence, the MYC0409-NA pre-charges the internal flying capacitors to make a balanced state based upon the divider ratio. This is done so that when the soft-start phase commences, the voltage across the capacitors is at their nominal voltage and known state. Note that the adaptive pre-charge system takes pre-charging time depending on the external voltages present on the circuit.

The output voltage may not rise monotonically during the pre-charge period.

Soft-start Operation

After the pre-charge phase is completed, the device enters soft-start mode and charges the output capacitor at 134mA typical value input current. It exits the state when the V_{OUT} voltage has reached the PGOOD V_{OUT} threshold. The PGOOD pin can go high at the same time. Figure 8 shows a typical power-up sequence.

As the device goes through a soft-start sequence, a load current should not be applied to the device until the PGOOD pin is high. If a load is connected before this, the device will not start up. If the output current is loaded, V_{OUT} may not reach the target during the soft-start phase. As a result, the system detects soft-start timeout, latches off the device and then requires the EN pin to be toggled to restart. The soft-start timeout is 100ms typical value. A similar situation can also happen if there is too much C_{OUT} capacitance.

Copyright ©2026 Murata Manufacturing Co., Ltd. All rights reserved.
Specifications are subject to change without notice.

Downloaded from Arrow.com.

PGOOD Operation

The power good pin is a bi-directional open drain pin. When the output voltage is above the PGOOD V_{OUT} threshold, the PGOOD pull-down FET is turned off to allow the external pull-up resistor to pull up the node. The PGOOD pin must be pulled up externally. If another device or digital I/O is also pulling down on this pin, the MYC0409-NA remains in soft-start mode, and high-power mode is not enabled. When MYC0409-NA allows PGOOD to be pulled high, the charge pump is ready to support the full load current.

When multiple MYC0409-NAs are used in parallel, all their PGOOD pins must be connected. In this case, all MYC0409-NAs must complete soft-start before PGOOD is asserted and full power operation is allowed. In the event of a fault at one or more parallel MYC0409-NAs, the PGOOD pin will be pulled low by the faulted MYC0409-NAs.

Note that the PGOOD pin of a disabled device will NOT be pulled low if the device is not enabled. In effect, if EN=0, the PGOOD pin should be ignored. Table 7. Pin Description shows the PGOOD pin table and Figure 16. PGOOD Sequence Diagram shows in Figure.16. V_{OUT} pre-biased condition would enable PGOOD function to pull low if the part enabled.

Table 8. PGOOD Pin Table

VIN	EN	STATE	PGOOD
$V_{IN} \leqq V_{TH_UVH}$	X	X	X(1)
$V_{IN} > V_{TH_UVH}$	LOW	Shutdown	HIGH(2)(3)(4)
$V_{IN} > V_{TH_UVH}$	HIGH	After Start-up and Normal (fault free) operation	HIGH(5)
		Others	LOW

Notes:
(1) If $V_{IN} \leqq$ UVLO, the PGOOD should be ignored.
(2) It is pulled HIGH when the module is in stopped state shut-down.
(3) EN signal changes from HIGH to LOW (Shut-down period), it indicates Low for 60ms(Typical). After that, the PGOOD is pulled HIGH.
(4) In the case of PGOOD being pulled up by divided V_{OUT}, it indicates Low.
(5) It indicates LOW during soft-start operation.

PGOOD Sequence Diagram

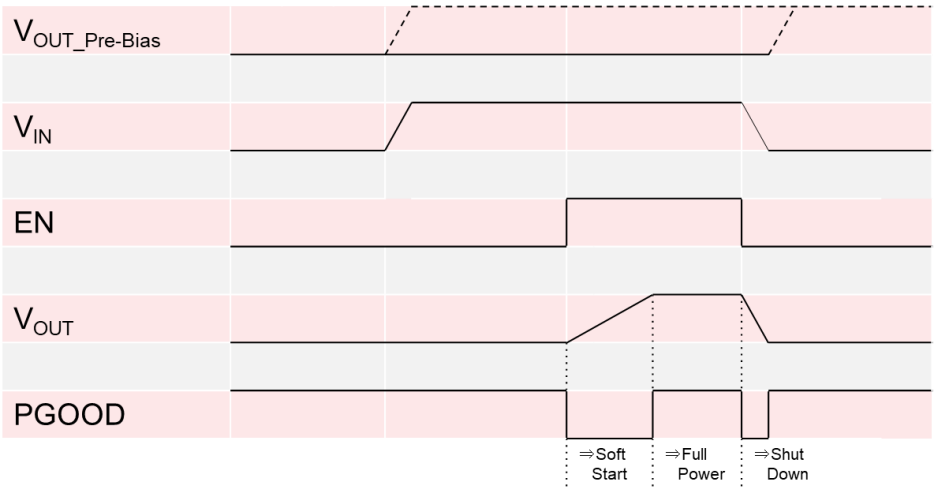

Figure 16. PGOOD Sequence Diagram

Copyright ©2026 Murata Manufacturing Co., Ltd. All rights reserved.
Specifications are subject to change without notice.

Downloaded from Arrow.com.

Figure 17 shows an example of PGOOD Application Circuit. If there is not 3.3-5V rail, PGOOD can be pulled up by divided V_{OUT}. Using 100kohm and 47kohm with 1% tolerance to the V_{OUT} dividing resistors can support wide V_{IN} range. Note that PGOOD voltage varies with V_{OUT} voltage in this case.

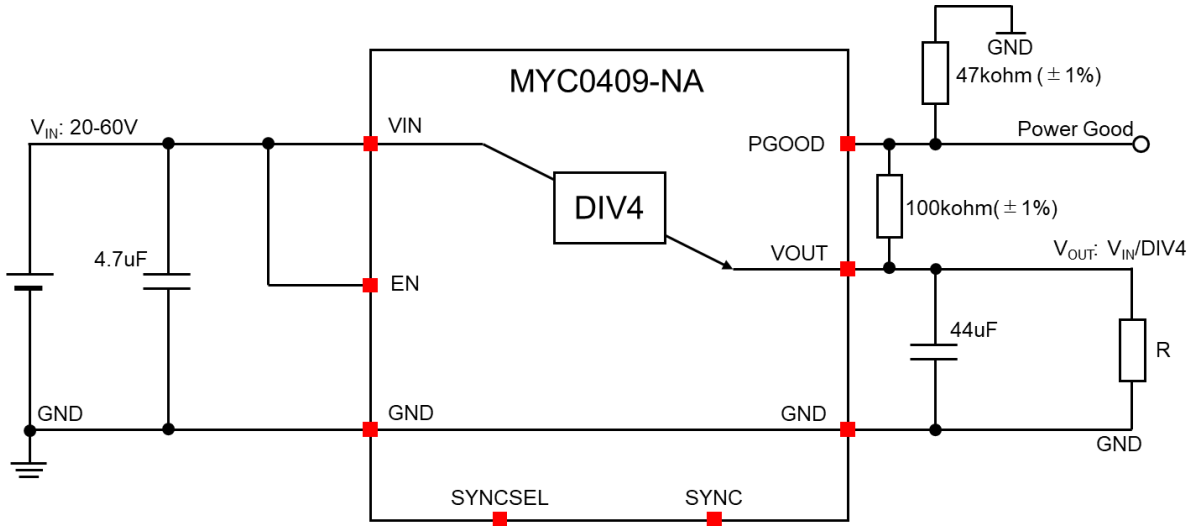

Figure 17. PGOOD Application Circuit

Copyright ©2026 Murata Manufacturing Co., Ltd. All rights reserved.
Specifications are subject to change without notice.

Downloaded from Arrow.com.

External/Internal Clock Modes and SYNCSEL Pin

In most applications, the MYC0409-NA operates using an internal oscillator. Table 9 shows the SYNC pin table.

Table 9. SYNC Pin Table

DETECTOR	SYNC	EFFECT OF FAULT
GND	Output	The internal clock is sent to the SYNC pin as an output.
OPEN	Input	An external clock can be applied to the sync input. If no clock in, the internal clock is used.

The charge pump is operated at a half frequency of the SYNC pin input/output clock. Because MYC0409-NA internal components are optimized for efficiency with the internal oscillator frequency, injecting an external clock is not recommended for single-unit applications. If configured to use an external clock (SYNCSEL=open circuit), and the external clock stops or is not present for some reason, an internal watchdog detects the missing clock and causes MYC0409-NA to swap back to use of the internal clock source. When the expected external clock source resumes, the MYC0409-NA reverts to using the external clock.

When the SYNCSEL pin is tied to GND, the internal clock is present on the SYNC pin.

Since the SYNC pin is high impedance and can be affected by external noise, in the event that an external clock out function is not being used in the application, it is recommended that the SYNCSEL pin is left to float, and the SYNC pin is tied to GND by a resistor.

For parallel operation, SYNCSEL pin on one of the paralleled modules should be GND to provide the clock for the others, the other paralleled modules should be left floating to receive the shared clock to get all synced up.

Protections (1)

MYC0409-NA is a high power device. To protect both systems, and the internal circuitry of MYC0409-NA, there are multiple fault detection circuits built in. Table 10 shows a summary of the various protection modes.

Table 10. Protections

DETECTOR	LATCHED OFF OR AUTOMATIC RETRY	RESPONSE TIME UNIT	EFFECT OF FAULT
Over temperature	Automatic retry	us	PGOOD goes low and the power stage switches off until the temperature reduces under the hysteresis threshold. At this point, the device automatically restarts. The device needs to restart into no load to automatically restart.
V_{IN} under-voltage	Automatic retry	us	PGOOD goes low and the charge pump is disabled until V_{IN} returns above the UVLO threshold and enabled. The device needs to restart into no load to automatically restart.
I_{OUT} overcurrent	Automatic retry	us	If the load current exceeds the over-current limit, PGOOD goes low and the charge pump is disabled for a certain period to cool down. If the device is still over current after the cooldown period, after the cooldown period it automatically restarts.
I_{OUT} short circuit	Latched off	us	If the load current exceeds the short-current limit, the device is immediately latched off and shuts down. EN must be toggled to restart the device.
Soft-start timeout	Latched off	us	If V_{OUT} does not reach the target voltage of V_{IN} divided by 4 within the soft start timeout period, the device shuts down and EN must be toggled to restart it.
PGOOD held low	Automatic retry	us	If the charge pump is operating at full power and if PGOOD is pulled down externally, the device enters soft-start mode. If the PGOOD pin is held low for less than the soft-start period, the charge pump returns to full power operation. If the PGOOD pin is held low for longer than the soft-start duration, the charge pump completes a soft-start cycle before returning to normal operation and should not be loaded during this period.
V_{OUT} under-voltage	Automatic retry	us	If the output of the device is under the V_{OUT} threshold, the PGOOD pin is pulled low. The device will switch off and enter a cooldown period. After the cool down period the charge pump will restart into soft start mode.

Note: (1) Protections are designed to prevent any damages or issues on the module as a best effort service. This will not guarantee safety or no damages in your system. Murata highly recommends having the primary protection like adding Fuse and regarding those protections as supportive functions in your systems.

Copyright ©2026 Murata Manufacturing Co., Ltd. All rights reserved.
Specifications are subject to change without notice.

Downloaded from Arrow.com.

V_{IN} Under-voltage and Thermal Shutdown Faults

The V_{IN} under-voltage and thermal shutdown faults are grouped purely because the effect they have on the charge pump is similar. If either of these faults is present when the charge pump is first enabled, the charge pump cannot start up.

The charge pump holds in this state until both faults are clear, regardless of how long this takes.

V_{IN} under-voltage and thermal shutdown faults are considered "persistent" as they will hold the charge pump disabled until the fault clears.

In the case of V_{IN} under-voltage, it is unlikely that the charge pump will be able to support the full load current when V_{IN} (and therefore V_{OUT} too) is too low. Because it is not desirable for MYC0409-NA or for the load to operate in this condition, the charge pump will hold off waiting for V_{IN} to improve/recover.

An over-temperature fault is likely to occur only when MYC0409-NA is dissipating too much internal power, which normally results from some other fault conditions such an overload condition. In the event of over-temperature, MYC0409-NA may start to drift out of guaranteed performance specifications, which would be undesirable for the system. To recover from over-temperature, the power dissipation in MYC0409-NA must be reduced to reduce the internal temperature.

When V_{IN} under-voltage or over-temperature fault is detected during normal operation, MYC0409-NA enters a controlled shutdown sequence with an unlimited cool-down period. When the faults clear, the MYC0409-NA enters a soft-start sequence.

I_{OUT} Overcurrent Protection

Over-current protection operates by sensing the current being drawn from V_{IN}. The over-current protection trips when MYC0409-NA is operated outside the recommended operating conditions. Typically, the device trips when the output current exceeds 10A typical. The over-current protection has two separate protection methods.

- If the current exceeds the over current protection threshold of 10A typical, then when triggered, the device will enter a cool-down period and after this automatically restart. During this time the PGOOD pin is pulled low.

- If the current exceeds 15A typical, the device immediately shuts down and latches off. During this time, the PGOOD pin is pulled low. To restart the device, the EN pin must be toggled.

MYC0409-NA reacts to over-current fault by entering a controlled shutdown sequence. The device is then latched off until EN is toggled. After enable is toggled and the pre-charge is complete, MYC0409-NA enters a normal soft-start sequence and attempts to restart. Note that some persistent fault conditions may prevent the charge pump from restarting successfully, for example, in the event of a hard fault to GND at V_{OUT}.

V_{OUT} Under-voltage Protection

The V_{OUT} under-voltage fault detector measures value at V_{OUT} with the expected value derived from $V_{IN}/4$. The V_{OUT} under-voltage fault is designed to be slow and represents an averaged value. The V_{OUT} under-voltage flag trips when V_{OUT} goes below 80% of the target (V_{OUT_UVP}).

The V_{OUT} under-voltage detector trips when V_{OUT} goes below 80% of the target voltage. It is important that external components are chosen so that expected transient loads do not trip the V_{OUT_UVP} threshold. In effect, the application should ensure that the load dependency causes a less than 20% deviation from the nominal V_{OUT}.

Soft-start Timeout

When MYC0409-NA first tries to supply power to the load, the power is limited by soft-start circuit. Using soft-start has no significant side effects if the start-up is "normal".

If MYC0409-NA starts up into a fault, the soft-start helps to manage the power being supplied to the fault as well as limiting the power dissipation in MYC0409-NA. In normal, fault-free operation, the soft-start timeout should be invisible if the soft-start current is able to ramp V_{OUT} to the target voltage inside 100ms. In the event of a fault, the soft-start timeout occurs when V_{OUT} does not ramp to the target voltage in the expected time. In this case, the soft-start timeout causes power to the load to be stopped and MYC0409-NA to enter a controlled shutdown sequence. The device then latches off, and EN must be toggled to restart it.

Copyright ©2026 Murata Manufacturing Co., Ltd. All rights reserved.
Specifications are subject to change without notice.

Downloaded from Arrow.com.

PGOOD Low Detection

In a stand-alone MYC0409-NA implementation, the PGOOD signal will likely have only one driver. When MYC0409-NA is ready for full power, PGOOD goes high and stays high for as long as the single MYC0409-NA remains enabled and fault-free.

In parallel operation, the PGOOD signal must be connected in a wired OR configuration with the other devices. When all devices are ready for full power, the PGOOD signal goes high. In the event of a fault, the PGOOD signal is pulled low and switches off all the parallel devices. EN must then be toggled to restart the devices.

Application Information

Charge Pump based DCDC converter is the high efficiency bus converter which doesn't have the regulation capability. Because of its architecture, there are some differences from conventional inductive buck converters. And some of the behaviors may cause critical issues if you use inappropriate way although it is as same way as the conventional buck converters.

Charge Pump Architecture Basics

Charge Pump is a capacitive voltage converter which is configured by multiple switches and capacitors like shown in Figure 18. The drawing shows divide by four configurations.

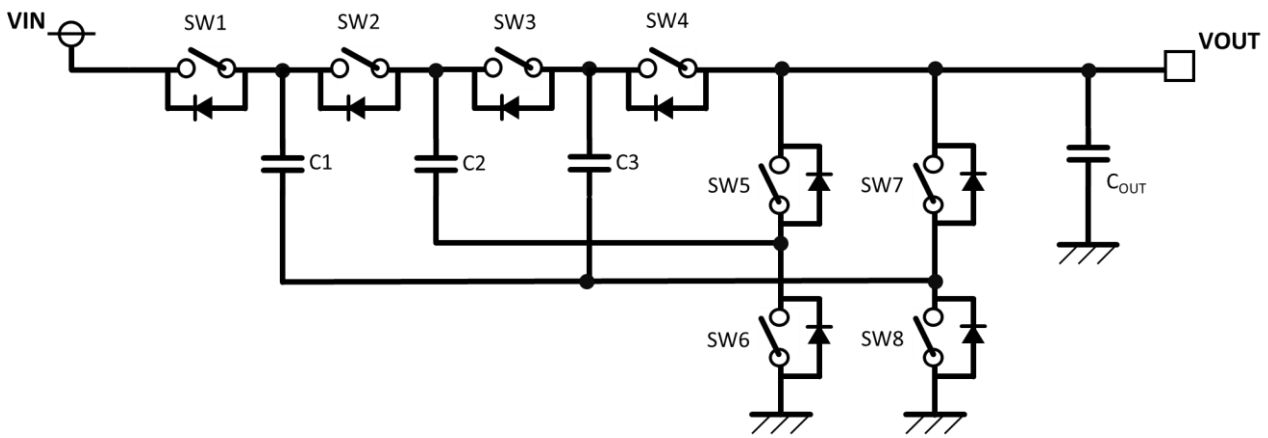

Figure 18. Divide by Four Charge Pump Configuration

Charge pump usually has two main switch states. Our UltraCP™ series also have the two main switch states shown in Figure 19-A and Figure 19-B.

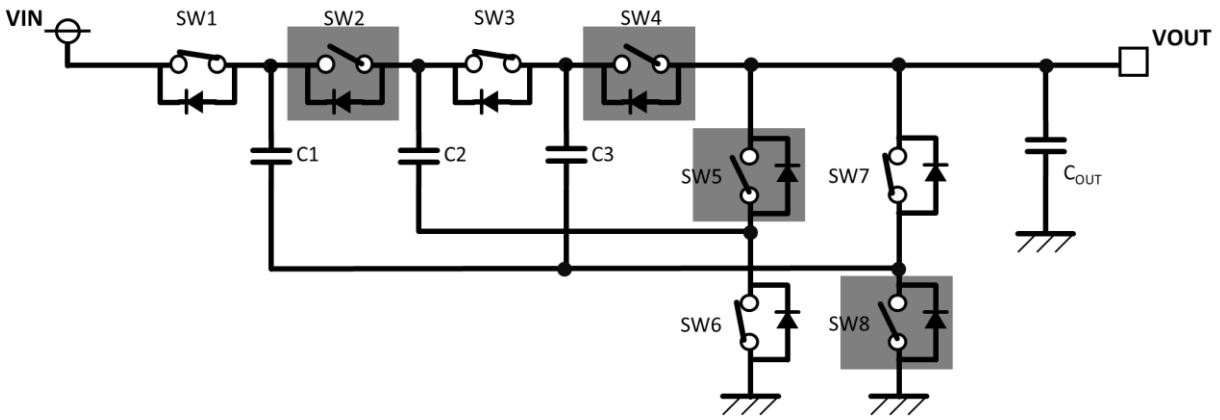

Figure 19-A. Divide by Four Charge Pump Phase One Configuration

Copyright ©2026 Murata Manufacturing Co., Ltd. All rights reserved.
Specifications are subject to change without notice.

Downloaded from Arrow.com.

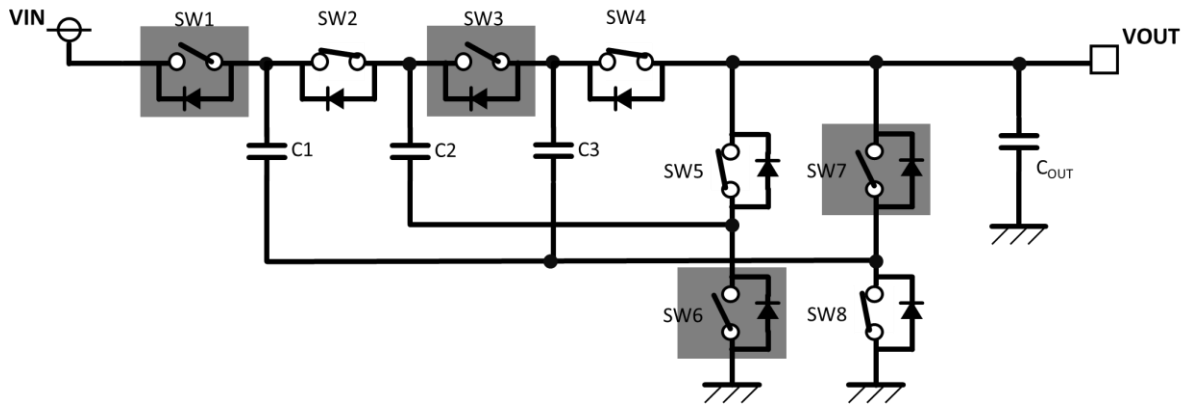

Figure 19-B. Divide by Four Charge Pump Phase Two Configuration

During phase one, flying capacitor of C1 will be connected between V_{IN} and V_{OUT}. And the C2 and C3 will be connected between V_{OUT} and GND. In phase two, C1 and C2 will be connected between V_{OUT} and GND. And the C3 will be connected between V_{OUT} and GND. Figure 20 shows these two states of capacitor connection and charged voltage relationship. Once the charge pump finishing soft-start, each capacitor will have $V_{IN}/4$, $V_{IN}*2/4$ and $V_{IN}*3/4$ voltage. This voltage will be maintained to keep switching between the phase one and the phase two. To improve the charge pump efficiency, increase of the flying capacitor capacitance works well. Also, minimizing switch resistance and parasitic resistance works, too. Our UltraCP™ series has optimized CFLY, power switch resistance and routing parasitic. Therefore, users wouldn't need to care about such a detail.

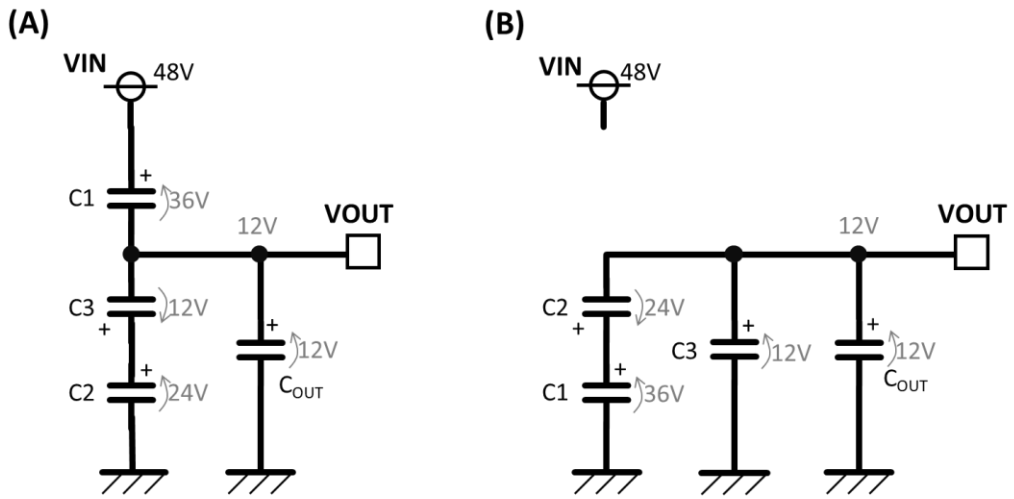

Figure 20. Divide by Four Charge Pump Capacitor Connection

MYC0409-NA is based around a high efficiency, charge pump based DC-DC converter with an unregulated output voltage. Because of the architecture, there are some important characteristics which are different from conventional inductive buck converters. To avoid damage to the system, or the device, it is important to understand some of the key architecture differences compared to conventional buck converters. For the details, please refer the section of Charge Pump Architecture and Important Notice.

Copyright ©2026 Murata Manufacturing Co., Ltd. All rights reserved.
Specifications are subject to change without notice.

Downloaded from Arrow.com.

Application Performance

Typical performance with the application board of Figure 26 are shown in Figure 21 to Figure 24. T_A = 25degC

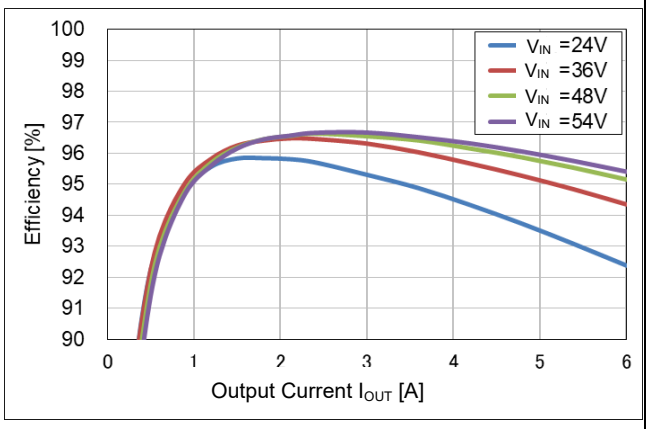

Figure 21. Efficiency

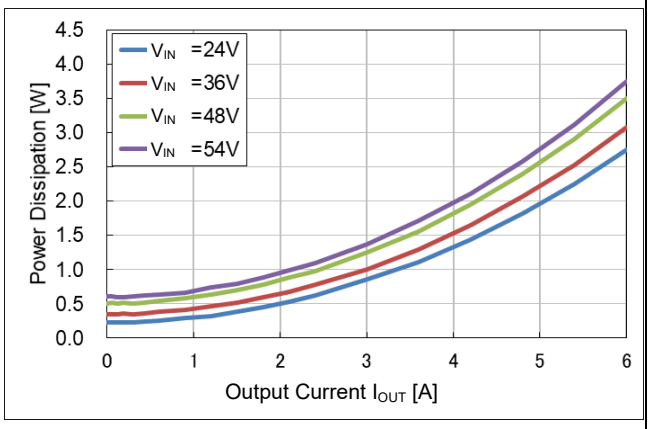

Figure 22. Power Dissipation

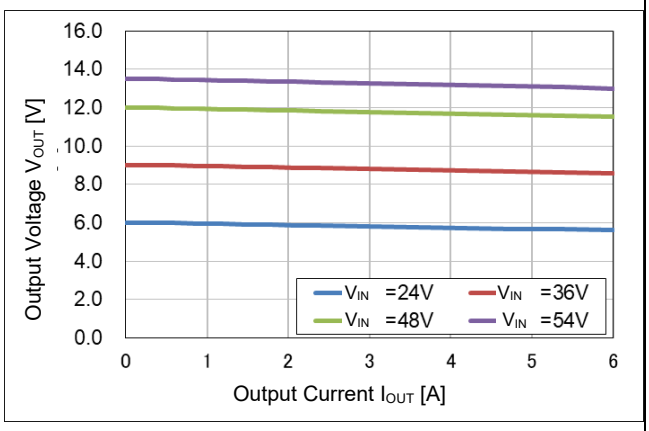

Figure 23. V_{OUT} Load Regulation

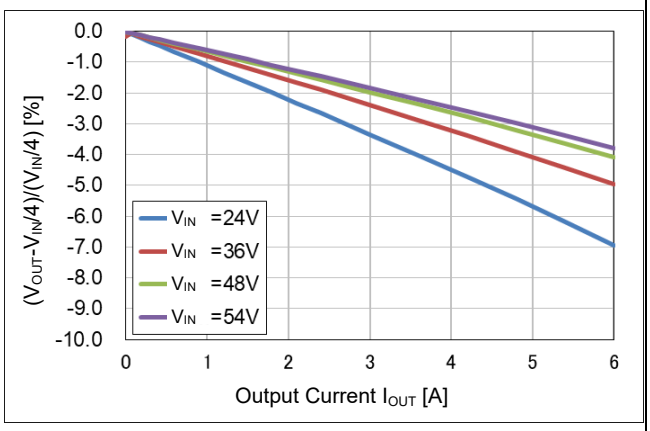

Figure 24. V_{OUT} Drop Ratio

Application Schematic

An example of MYC0409-NA standalone schematic is shown in Figure 25. Please refer to the recommended circuit part list shown in Table 1.

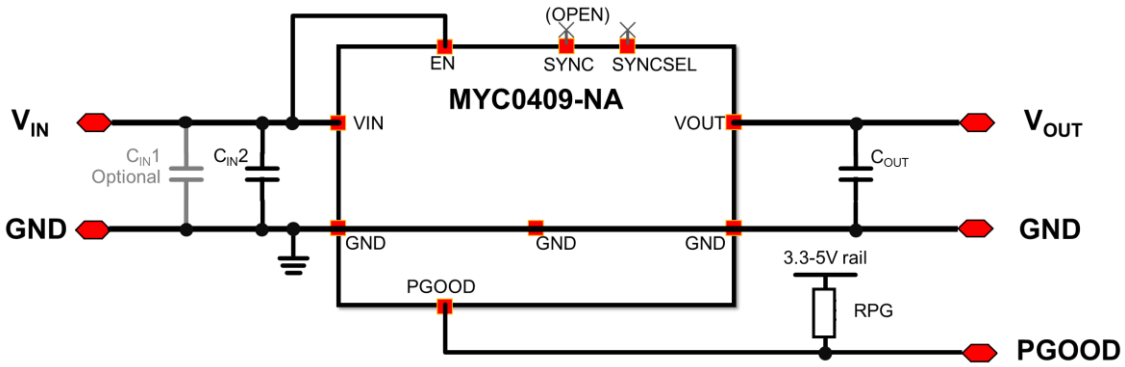

Figure 25. Application Schematic

Copyright ©2026 Murata Manufacturing Co., Ltd. All rights reserved.
Specifications are subject to change without notice.

Downloaded from Arrow.com.

Application Circuit Part List

An example of the standard components are shown in Table 11. Components must be chosen referring the system requirement like Voltage, Temperature, etc.

Table 11. Application Circuit Part List

REFERENCE	VALUE	DESCRIPTION	PART NUMBER
$C_{IN}1$	100uF	Electrolytic Capacitor (Optional)(1)	-
$C_{IN}2$	4.7uF	Input Capacitor Ceramic capacitor, 4.7uF, 100V, ±10%, X7S	GRM31CC72A475KE11 (Murata)
C_{OUT}	22uF x 2pcs	Output Capacitor Ceramic capacitor, 22uF, 25V, ±20%, X7S	GRM31CC71E226ME15 (Murata)
RPG	10kohm	Pull-up Resistor for Power Good Indication Chip resistor, 1/10W, ±5%	RK73B1ETTP103J (KOA)

Note: (1) If there is a non-negligible parasitic impedance between the power supply and the converter, such as during evaluation, the optional input capacitor "$C_{IN}1$" may be required to reduce the impedance. The recommended optional capacitor is an example. Please consider the optimum value for the case. This capacitor is usually an aluminum electrolytic type. It isn't necessary to place the capacitor near the input terminal of the converter.

Application Board Example

All reference data on this datasheet are taken with this board.

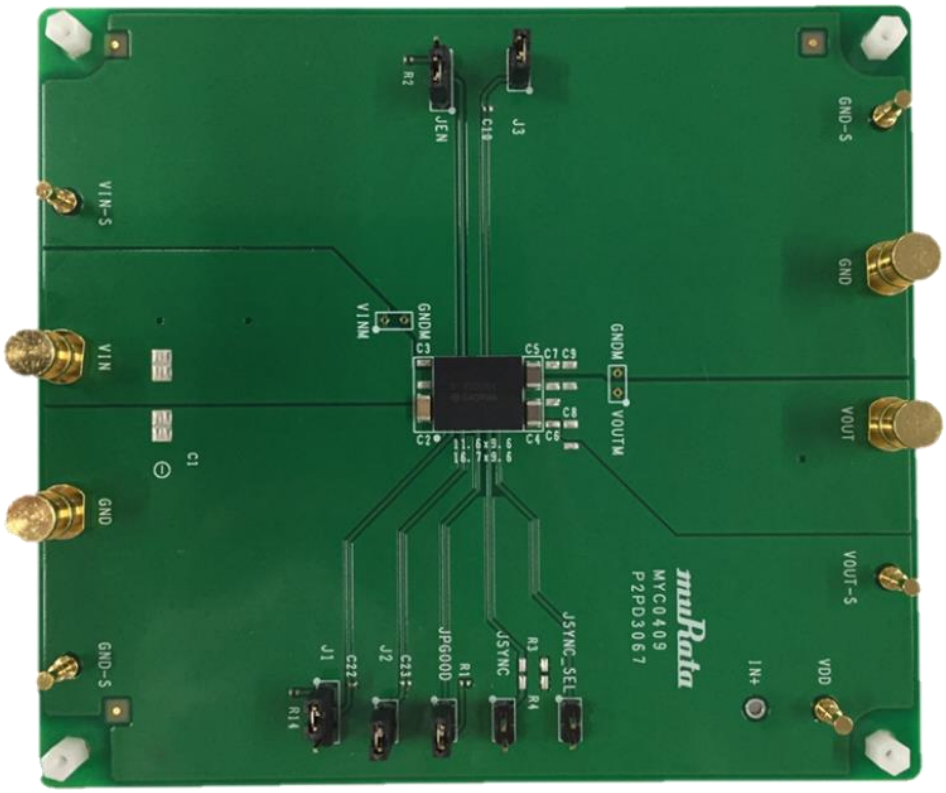

Figure 26. Application Board Example

Copyright ©2026 Murata Manufacturing Co., Ltd. All rights reserved.
Specifications are subject to change without notice.

Downloaded from Arrow.com.

Component Selection

Input Capacitor

The input capacitor is connected between VIN and GND. It is used to reduce the ripple on V_{IN}. The input capacitor should be placed as close to the module as possible to reduce any parasitic inductance effects. The voltage rating of the capacitor needs to be as high as the absolute maximum voltage rating for the system and the effect of the capacitor voltage coefficient should be considered to determine the effective capacitance value at the applied V_{IN}. Since the charge pump isn't a regulator, ripple voltage on V_{IN} will affect the output voltage.

Output Capacitor

The output capacitor is used to reduce the ripple on V_{OUT}. The higher the capacitor values, the lower the ripple at V_{OUT} becomes. Increasing the output capacitor value will increase the soft-start duration and might push the module to time out during soft-start. Please take account into this to consider additional C_{OUT} value of your system. Following system's input capacitance would be the C_{OUT} of MYC0409-NA.

Input Fuse

Certain applications and/or safety agencies may require fuses at the inputs of power conversion components. Fuses should be also used when there is possibility of sustained input voltage reversal which is not current- limited. For greatest safety, we recommend a fast blow fuse installed in the ungrounded input supply line. The installer must observe all relevant safety standards and regulations. For safety agency approvals, install the converter in compliance with the end-user safety standard.

Application Schematic with Secondary

An example of MYC0409-NA with secondary schematic is shown in Figure 27.

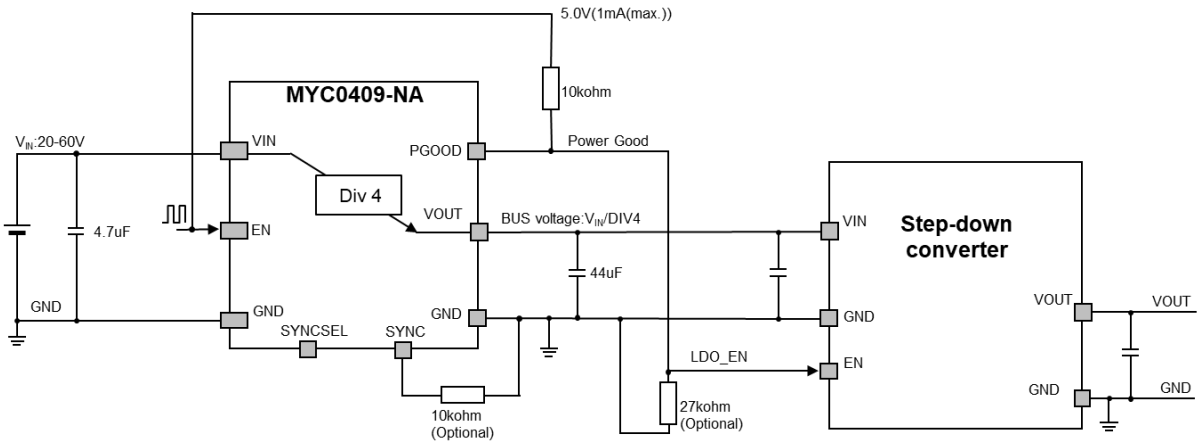

Figure 27. Application Schematic with Secondary

Copyright ©2026 Murata Manufacturing Co., Ltd. All rights reserved.
Specifications are subject to change without notice.

Downloaded from Arrow.com.

Parallel Operation

MYC0409-NA can be run in parallel in a multi-device configuration to increase output power as shown in Figure 28. In parallel operation mode, care and attention must be paid to some important things.

Current and Thermal Balance

As with standard inductive DC-DC converters, a paralleled charge pump also must be taken care of the current/thermal balance. The MYC0409-NA provides divided voltage of the input voltage to its output. The output voltage relates the input voltage and the output voltage isn't regulated. Therefore, the charge pump provides natural droop based on the equivalent output resistance (R_{OUT}).

When the load applied to the paralleled charge pump modules, each output voltage of the modules starts to droop. The voltage drop from the ideal output voltage (V_{IN}/DIV) is decided by (R_{OUT} + parasitic resistance)*I_{OUT}. And the load current of each module is decided by the relationship of the (R_{OUT} + parasitic resistance). For the charge pumps to load-share effectively, attention should be paid to the layout to reduce the parasitic resistance variation of the input/output power tracks.

The MYC0409-NA is capable of up to 6A unless limited by other factors. Therefore, when in parallel operation imbalance in the load sharing caused by parasitic impedances can result in one module current limiting before another. This effect can restrict the total amount of power available to the system.

The power loss generated by the module results in heat rise in the module to maintain load sharing so that the modules should share the same thermal structure.

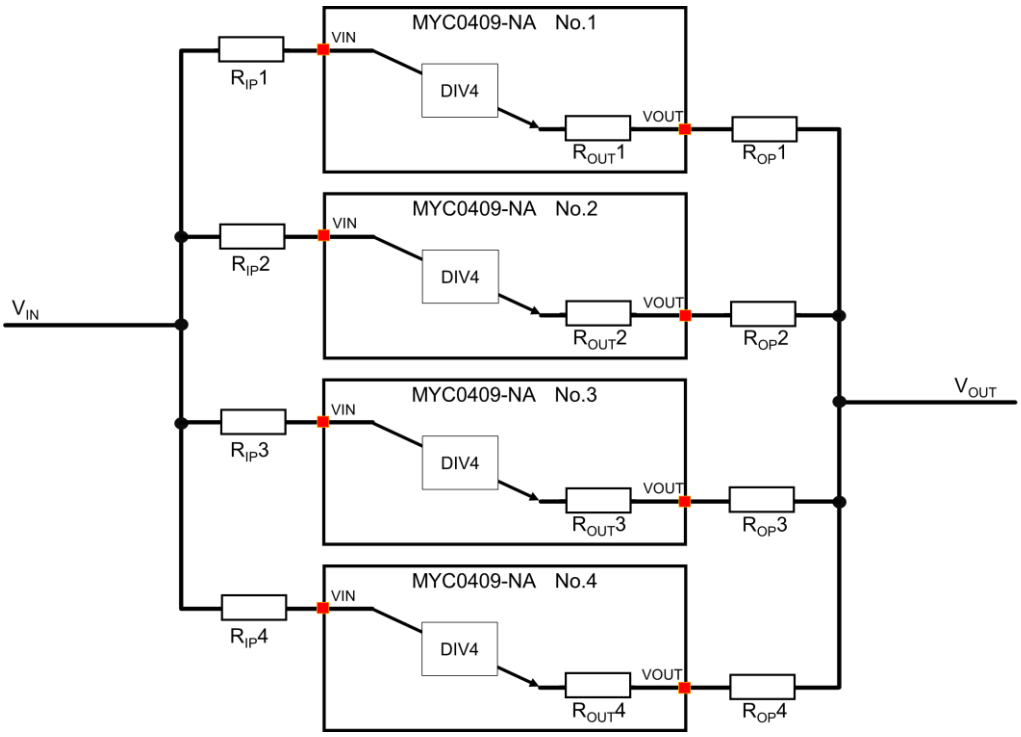

Figure 28. Multi-module Current Sharing

Pin Connections for Parallel Operation

Pin connection limitation is slightly different from the single module operation. Please follow below instruction and refer the Figure 29.

PGOOD output must be pulled up together and combined in a wire OR configuration. The load following the charge pump should not be switched on until all PGOOD are high and the load should immediately be switched off if any of the PGOOD outputs switch low after start up.

The SYNCSEL pin on one of the paralleled modules should be GND to provide the clock for the others, the other paralleled modules should be left floating to receive the shared clock to get all synced up.

Copyright ©2026 Murata Manufacturing Co., Ltd. All rights reserved.
Specifications are subject to change without notice.

Downloaded from Arrow.com.

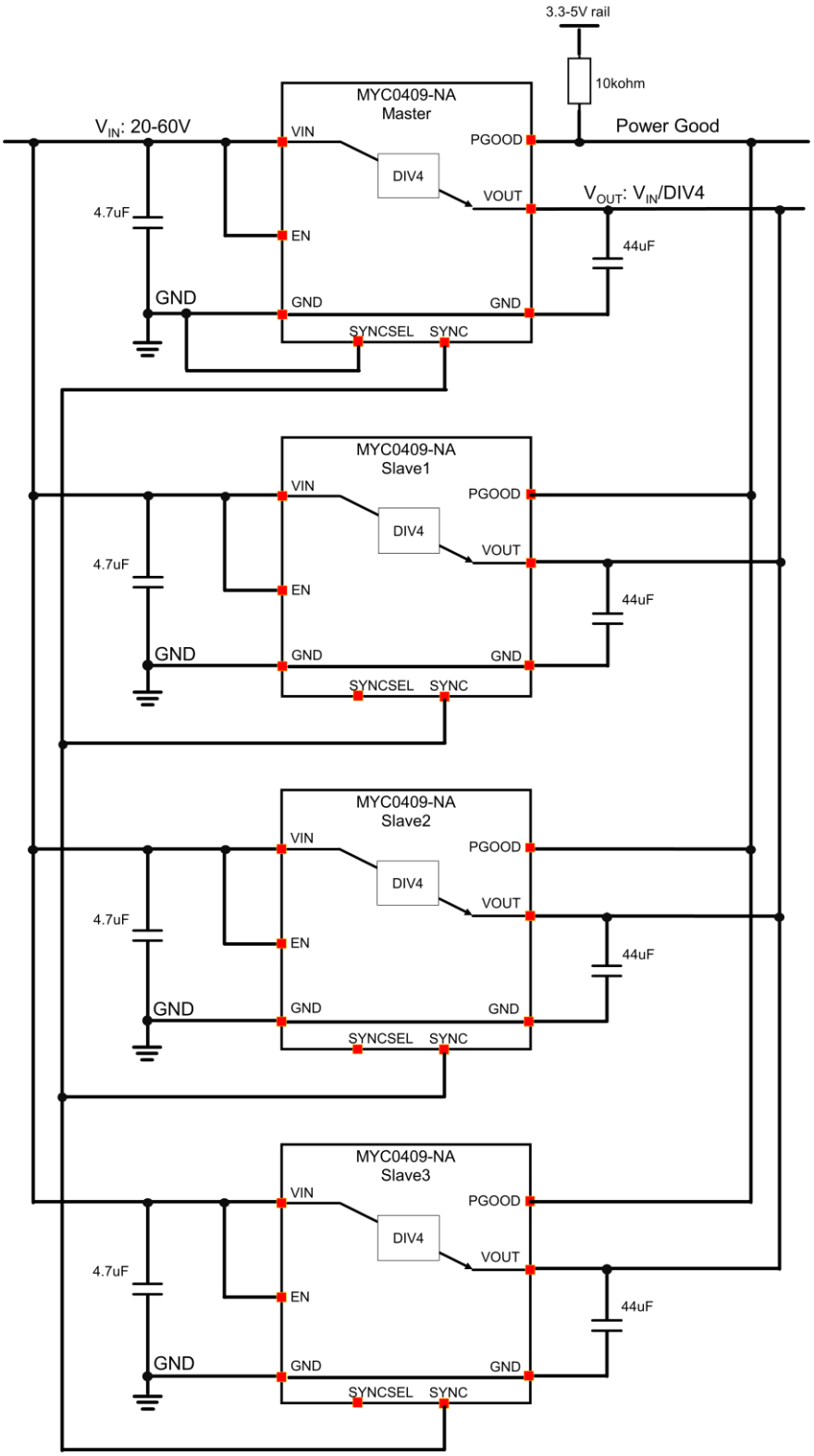

Figure 29. Multi-module Application Circuit

Copyright ©2026 Murata Manufacturing Co., Ltd. All rights reserved.
Specifications are subject to change without notice.

Downloaded from Arrow.com.

Charge Pump Architecture and Important Notice

MYC0409-NA uses multiple, low impedance, switches to take advantage of the higher energy density available in capacitors (compared to inductors) to transfer power. The keys to optimize charge pump efficiency include (i) reducing charge redistribution losses and (ii) minimizing thermal losses. MYC0409-NA reduce the charge redistribution loss with patented 'almost loss-less' architectures. The thermal losses are minimized by using lower voltage rated (internal) power FETs which take advantage of the reduced voltage as the input supply gets divided.

These two key features make MYC0409-NA very efficient. In exchange for the high efficiency, some of the differences to conventional buck converters need to be recognized to avoid permanent damage to the device.

Figure 30(A) shows an inductive regulator called a buck converter. There is an inductor between switching node to V_{OUT}, so it would be prevented transient change of current when a hard short happened.

For Figure 30(B), it would be high di/dt condition with a hard short because MYC0409-NA does not have a large inductor but has low impedance of power FETs. In general, inductance would be reduced the current slope of inductor and impedance of power FETs would be reduced peak current. Therefore, "Hard Short Circuit Condition" is written as below.

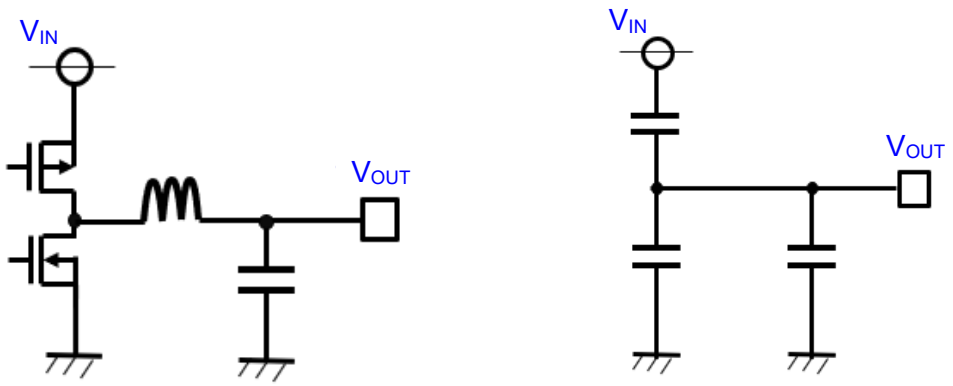

Inductive Regulator **(B) Charge Pump**

Figure 30. Inductive Regulator and Charge Pump

Hard Short Circuit Condition

MYC0409-NA is a capacitive DC-DC converter and has low inductance at the output to optimize its efficiency. As a result of the low output inductance, a hard short at this product output can result in a di/dt condition which can be much higher than a conventional, inductive, buck converter would allow.

MYC0409-NA has a built-in output current protection. However, hard output short circuits with very low impedance may cause permanent damage to the device and should be avoided. If such faults needed to be considered, it may be necessary to add primary protection (external to the device) to ensure adequate protection of the device and the condition might be varied over environment and use cases.

Copyright ©2026 Murata Manufacturing Co., Ltd. All rights reserved.
Specifications are subject to change without notice.

Downloaded from Arrow.com.

Soft-start and Capacitors Charge Balancing

The charge pump is an open-loop capacitive DC-DC converter. The output voltage is generated using "flying" capacitors ("CFLY") which move charge from one voltage level to another. The voltage across the flying capacitors in normal operation will be limited to V_{OUT}. The voltage balancing between and across the flying capacitors is important to maintain stability. Murata's charge pump has several internal states which specifically enhance stability including "pre-charge" and "soft-start". During pre-charge, each of the CFLY capacitors is charged to the appropriate DC voltage bias level (depending on V_{OUT}) to ensure a balanced state at start-up. During soft-start, the charge pump starts switching with a controlled current (134mA typical input current) to ramp V_{OUT} to the target voltage (depending on V_{IN}). The controlled start-up avoids inrush current and EMI issues during turn on and ensures V_{OUT} reaches the PGOOD V_{OUT} threshold before full power operation is enabled. As a further safety measure the soft-start time is also monitored to ensure the system does not contain any unexpected leakage paths (like V_{OUT} or CFLY shorts). As a result of the limited soft-start current, the system will not support starting up into a full power load. The PGOOD pin will indicate the system is ready for full load (when soft-start has finished, and V_{OUT} has reached the PGOOD V_{OUT} threshold). The soft-start timeout protection also means that the maximum output capacitance should be limited for reliable startup. Increasing C_{OUT} beyond the recommended level may mean that the charge pump fails to start-up.

Current limited soft-start consumes larger power than standard operation. Therefore, temperature rising during the soft-start condition needs to be cared.

Reverse Direction Current Flow and Operation

MYC0409-NA is designed to divide the input voltage by Four. Parasitic diodes, which are parts of the internal power switches, are based on power flow from V_{IN} to V_{OUT}. To avoid forward bias of the internal diodes, and potentially damaging high current levels, reverse power flow (from V_{OUT} to V_{IN}) must be avoided. Inductive buck converters are protected from very high di/dt conditions by the filtering effect of the power inductor. MYC0409-NA has much lower inductance (to optimize efficiency) and has very low impedance internal switches (and reverse diodes). Reverse power flow may be triggered when V_{OUT} is greater than $V_{IN}/4$.

MYC0409-NA is designed to safely start up into a pre-biased output if the condition $V_{OUT} <= V_{IN}/4$ is met. Should not start-up into a pre-biased output with the condition $V_{OUT} > V_{IN}/4$.

One condition which could cause reverse power flow is a rapid decrease in the V_{IN} voltage level while MYC0409-NA remains enabled. It may also result in an unexpected shut-down. To avoid them, V_{IN} should not be reduced rapidly while MYC0409-NA is enabled. Similarly reducing V_{IN} (while EN=0) and then re-enabling again with lower V_{IN} could result in reverse power flow if the V_{OUT} capacitor still holds the previous V_{OUT} level.

Input Voltage Transient

MYC0409-NA over-current protection operates by sensing the current being drawn from V_{IN}. A rapid increase in V_{IN} generates voltage difference between the input and the CFLY, resulting in excessive input inrush current. It may result in an unexpected shut-down. To avoid it, V_{IN} should not be increased rapidly while MYC0409-NA is enabled.

Copyright ©2026 Murata Manufacturing Co., Ltd. All rights reserved.
Specifications are subject to change without notice.

Downloaded from Arrow.com.

Packaging Information

This section provides packaging data including the moisture sensitivity level, package drawing, package marking and tape-and-reel information.

Package Drawing

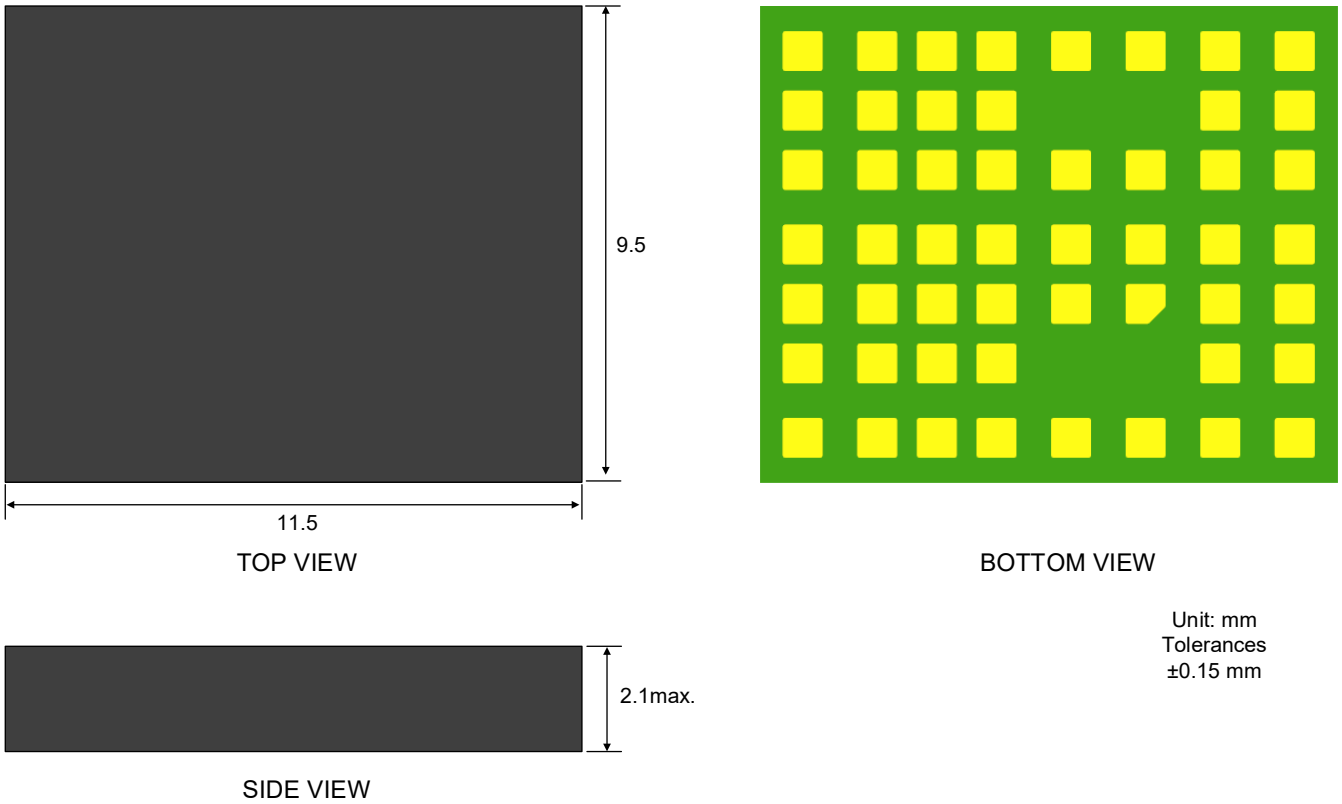

Figure 31. Package Overview

Copyright ©2026 Murata Manufacturing Co., Ltd. All rights reserved.
Specifications are subject to change without notice.

Downloaded from Arrow.com.

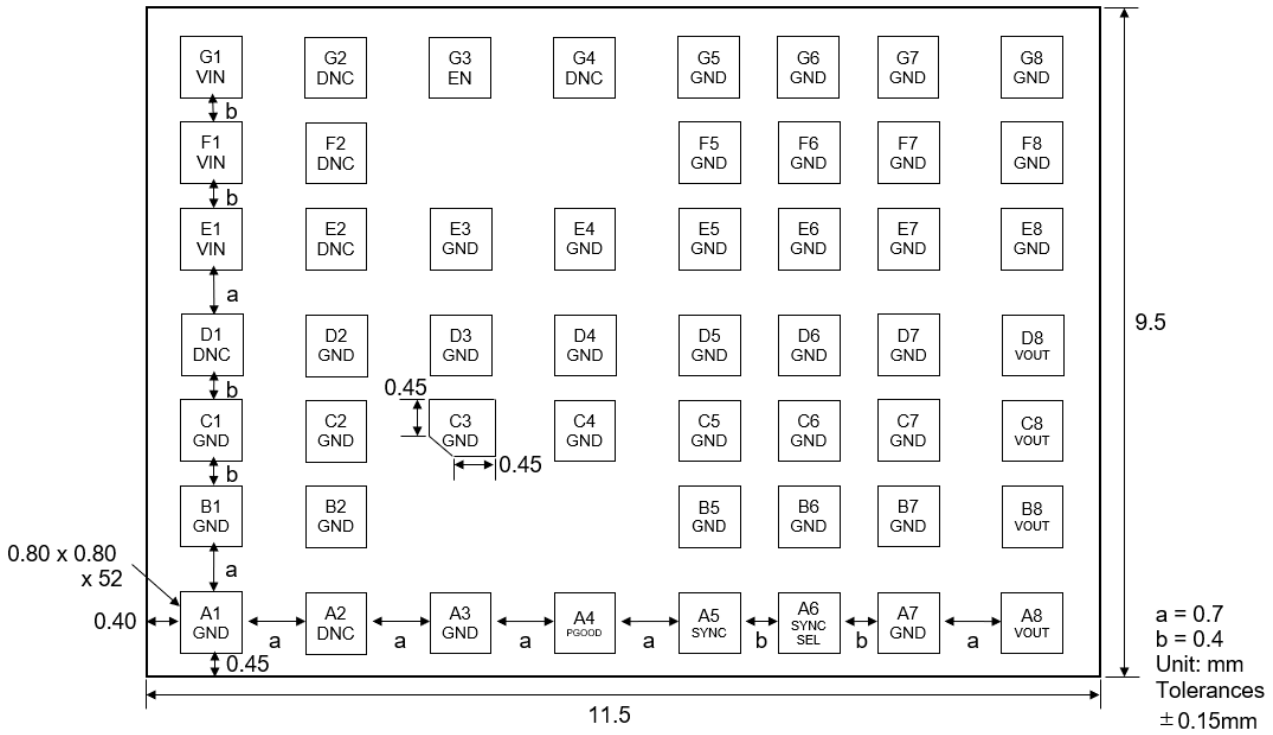

Figure 32. Package Foot Print and The Dimension (Top View)

Recommended Board Land Pattern

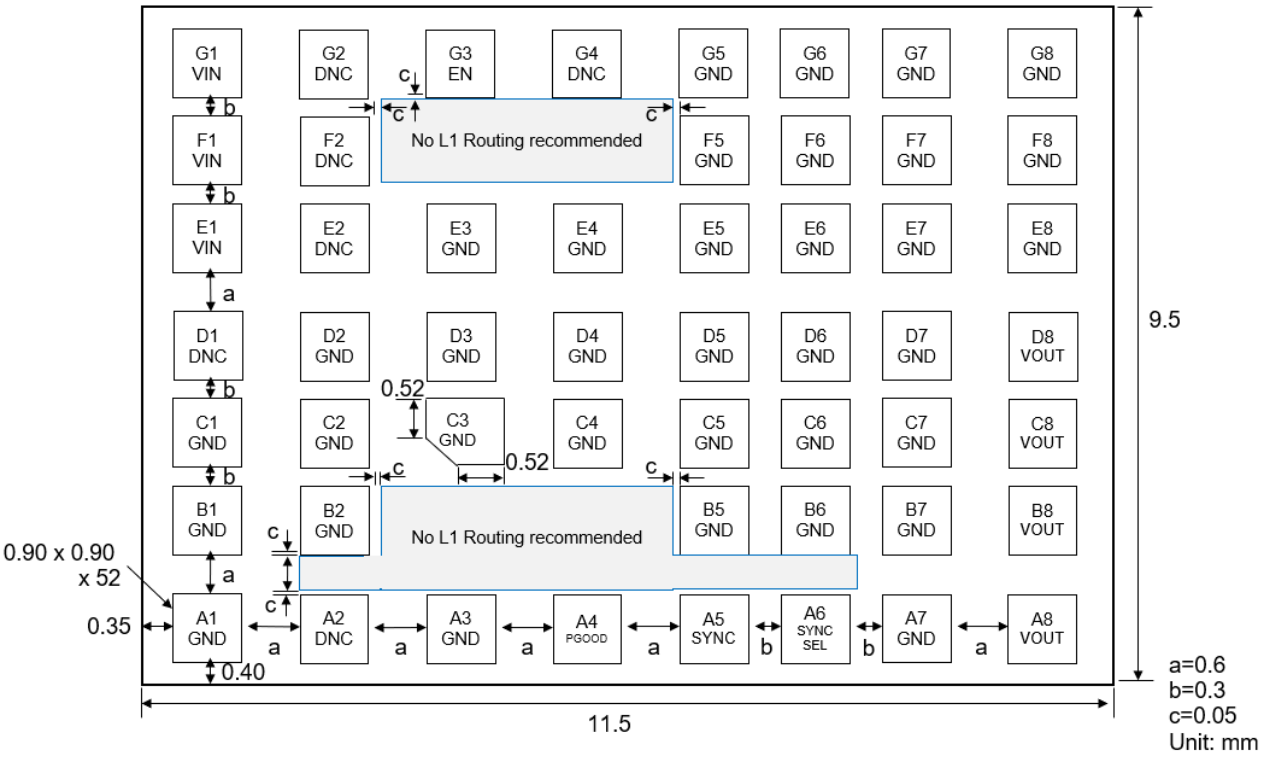

Figure 33. Recommended Board Land Pattern and The Dimension (Top View)

Copyright ©2026 Murata Manufacturing Co., Ltd. All rights reserved.
Specifications are subject to change without notice.

Downloaded from Arrow.com.

Tape and Reel Specification

Tape Dimension

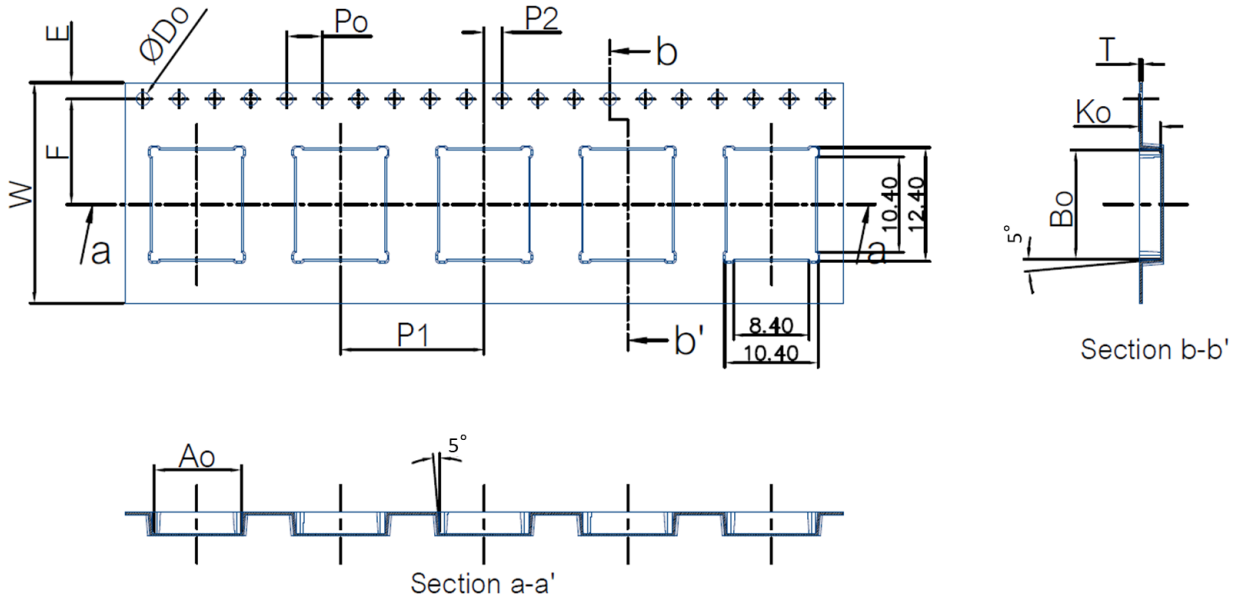

SYMBOL	VALUE	UNIT	TOLERANCE
A_O	9.90	mm.	±0.10
B_O	11.90		
K_O	2.30		
P_1	16.00		
$ØD_O$	1.50	mm.	+0.10 -0.00
$ØD_1$	-		
P_O	4.00		±0.10
P_2	2.00		
E	1.75		
So	-		
F	11.50		
W	24.00	mm.	+0.30-0.10
T	0.30		±0.05

Figure 34. Tape Dimension

Copyright ©2026 Murata Manufacturing Co., Ltd. All rights reserved.
Specifications are subject to change without notice.

Downloaded from Arrow.com.

Reel Dimension

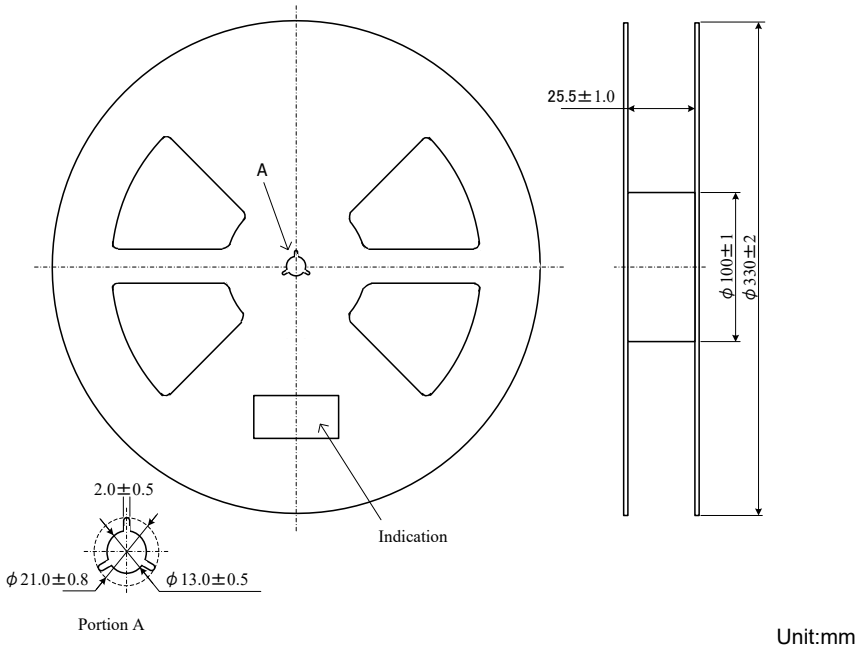

Figure 35. Reel Dimension

Module Orientation in Tape

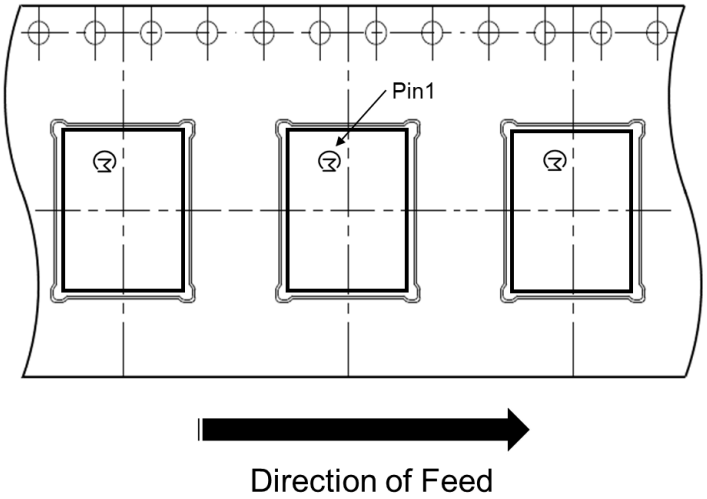

Figure 36. Module Orientation in Tape

Copyright ©2026 Murata Manufacturing Co., Ltd. All rights reserved.
Specifications are subject to change without notice.

Downloaded from Arrow.com.

Taping Specification

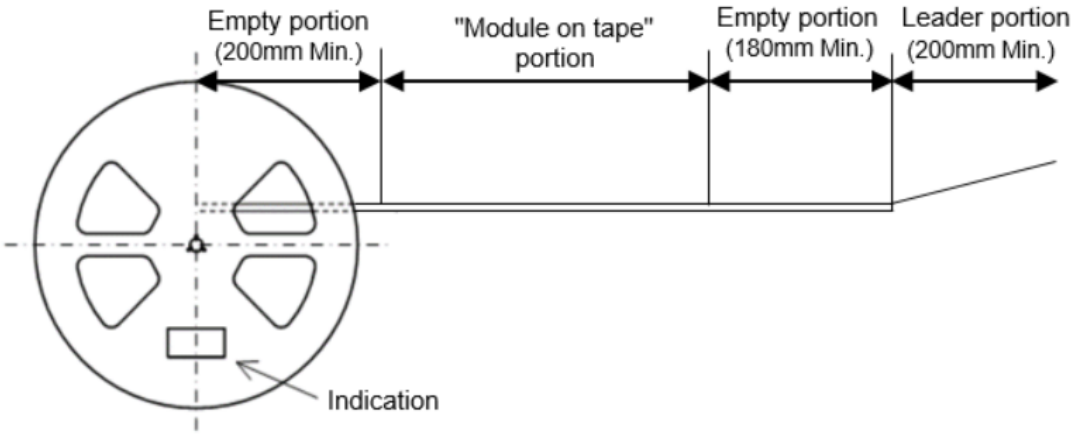

Figure 37. Taping Specification

1. The adhesive strength of the protective tape is within 0.1-1.3N.
2. Each reel contains 400 or 100pcs.
3. Each reel set in moisture-proof packaging because of MSL 3.
4. No vacant pocket in “Module on tape” section.
5. The reel is labeled with Murata part number and quantity.
6. The color of reel is not specified.

Soldering Guidelines

Murata recommends the specifications below when installing the converter. These specifications vary depending on solder types. Exceeding these specifications may cause damage to the product. Your production environment may differ therefore please thoroughly review these guidelines with your process engineers. This product can be reflowed twice.

Table 12. Reflow Solder Operations for Surface-mount Products

For Sn/Ag/Cu based solders	
Preheat Temperature	Less than 1degC per second
Time Over Liquidus.	45 to 75 seconds
Maximum Peak Temperature	260degC
Cooling Rate	Less than 3degC per second

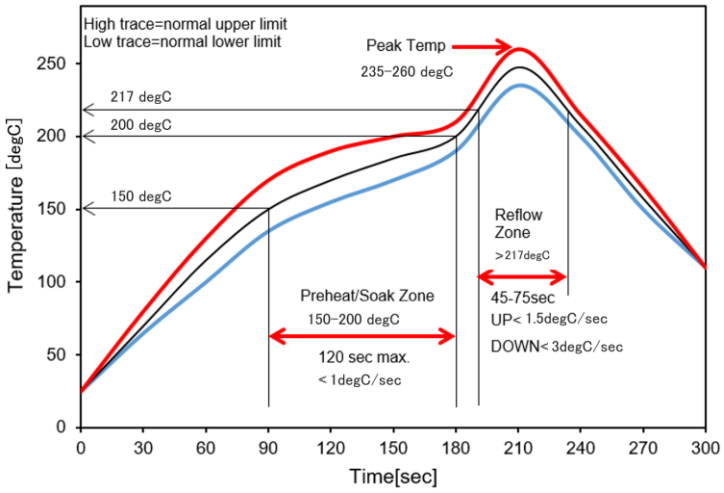

Figure 38. Reflow Profile for Sn/Ag/Cu Solder

Copyright ©2026 Murata Manufacturing Co., Ltd. All rights reserved.
Specifications are subject to change without notice.

Downloaded from Arrow.com.

Revision History

VERSION	DATE	MODIFICATION	PAGE
A01	DEC-2021	New document	
A02	APR-2022	Updated Notes (3). Updated Pre-charge Operation. Updated External/Internal Clock Modes and SYNCSEL Pin. Updated Parallel Operation.	p.6 p.13 p.15 p.22
A03	JUL-2022	Updated Electrical Characteristics Table. Updated Enable (EN).	p.5 p.13
A04	OCT-2022	Added Performance Specifications Summary Added Part Number Structure Added Soldering Guidelines Added Scope Added Fail-safe function Updated Limitation of Applications	p.3 p.3 p.31 p.33 p.34 p.33
A05	OCT-2023	Updated Top Marking Specification Added Output Current (Start-up) in Electrical Characteristics Table	p.3 p.5
A06	JAN-2024	Updated Electrical Characteristics Table Updated Pin Description Table Updated PGOOD Sequence Diagram Updated SYNC Pin Table Updated Reflow Solder Operations for Surface-mount Products Table	p.5-6 p.7 p.14 p.16 p.31
A07	JAN-2025	Added "NRND" status to MYC0409-NA-D in Table1. Performance Specifications Summary and Ordering Information	p.3
A08	JUN-2026	Updated Taping Specification Added Storage	p.31 p.34

Copyright ©2026 Murata Manufacturing Co., Ltd. All rights reserved.
Specifications are subject to change without notice.

Downloaded from Arrow.com.

Notices

Scope

This specification (or this datasheet) is applied to MYC0409-NA.
- Specific applications: Consumer Electronics, Industrial Equipment

⚠ CAUTION

Limitation of Applications

The products listed in the datasheet (hereinafter the product is called the “Product”) are designed and manufactured for applications specified in the specification or the datasheet. (hereinafter called the “Specific Application”). We shall not warrant anything in connection with Products including fitness, performance, adequateness, safety, or quality, in the case of applications listed in from (1) to (11) written at the end of this precautions, which may generally require high performance, function, quality, management of production or safety. Therefore, Product shall be applied in compliance with the specific application.
We disclaim any loss and damages arising from or in connection with the products including but not limited to the case such loss and damages caused by the unexpected accident, in event that (i) the product is applied for the purpose which is not specified as the specific application for the product, and/or (ii) the product is applied for any following application purposes from (1) to (11) (except that such application purpose is unambiguously specified as specific application for the product in our catalog specification forms, datasheets, or other documents officially issued by us*).

(1) Aircraft equipment
(2) Aerospace equipment
(3) Undersea equipment
(4) Power plant control equipment
(5) Medical equipment
(6) Transportation equipment (such as vehicles, trains, ships)
(7) Traffic control equipment
(8) Disaster prevention/security equipment
(9) Industrial data-processing equipment
(10) Combustion/explosion control equipment
(11) Equipment with complexity and required reliability equivalent to the applications listed in the above

For exploring information of the Products which will be compatible with the particular purpose other than those specified in the datasheet, please contact our sales offices, distribution agents, or trading companies with which you make a deal, or via our web contact form.
Contact form: https://www.murata.com/contactform
*We may design and manufacture particular products for applications listed in (1) to (11). Provided that, in such case we shall unambiguously specify such Specific Application in the specification or the datasheet without any exception. Therefore, any other documents and/or performances, whether exist or non-exist, shall not be deemed as the evidence to imply that we accept the applications listed in (1) to (11).

Copyright ©2026 Murata Manufacturing Co., Ltd. All rights reserved.
Specifications are subject to change without notice.

Downloaded from Arrow.com.

Storage

Please store the products in room where direct sunlight cannot come in and use the products within 6 months after delivery
and maintain an appropriate storage condition using the following conditions.
- A temperature is +5 degC to +40 degC and a relative humidity is 20% to 70% as a standard condition. The temperature recommendation is less than 30 degC.
- If the storage period exceeds six months, check packaging, mounting, etc. before use.
- In addition, this may cause oxidation of the electrodes. If more than one year has elapsed since delivery, also check the solderability before use.

- Please do not store the products in the places such as : in a dusty place, in a place exposed directly to sea breeze, in an atmosphere containing corrosive gas (Cl_2, NH_3, SO_2, NO_X and so on).

This product is MSL3.
After opening bags, please store the products under maximum condition of 35degC, 5%RH in desiccator and use the products within 168 hours.
If the MSL floor life exceeds, it is recommended to proceed baking under the following conditions.
・125 +10/-0 degC, 48 hours (for product)
・40 degC, 5 %RH, 79 days (for reel packing or tray)

Fail-safe function

Be sure to add an appropriate fail-safe function to your finished product to prevent secondary damage in the unlikely event of an abnormality function or malfunction in our product.

Please connect the input terminal by right polarity. If you mistake the connection, it may break the DC-DC converter. In the case of destruction of the DC-DC converter inside, input over-current may flow. Please add a diode and fuse as following to protect them.

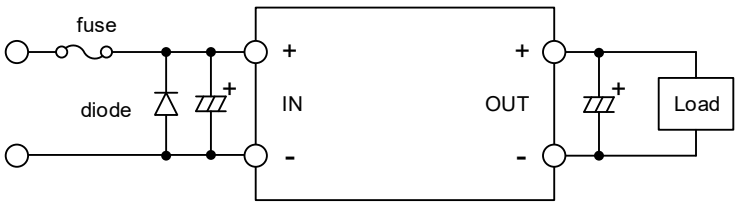

Please select diode and fuse after confirming the operation.

Figure 39. Circuit example with a diode and fuse

⚠ Note

1. Please make sure that your product has been evaluated in view of your specifications with our product being mounted to your product.
2. You are requested not to use our product deviating from the reference specifications.
3. If you have any concerns about materials other than those listed in the RoHS directive, please contact us.
4. Be sure to provide an appropriate fail-safe function on your product to prevent a second damage that may be caused by the abnormal function or the failure of our product.
5. Please don't wash this product under any conditions.

Product Specification

Product Specification in this datasheet are as of June 2026. Specifications and features may change in any manner without notice. Please check with our sales representatives.

Copyright ©2026 Murata Manufacturing Co., Ltd. All rights reserved.
Specifications are subject to change without notice.

Downloaded from Arrow.com.

Contact Form

https://www.murata.com/contactform?Product=Power%20Device

Disclaimers

The information described in this data sheet was carefully crafted for accuracy. However this product is based on the assumption that it will be used after thoroughly verifying and confirming the characteristics and system compatibility. Therefore, Murata is not responsible for any damages caused by errors in the description of the datasheet.

Murata constantly strives to improve the quality and reliability of our products, but it is inevitable that semiconductor products will fail with a certain probability. Therefore, regardless of whether the use conditions are within the range of this data sheet, Murata is not responsible for any damage caused by the failure of this product., (for example, secondary damage, compensation for accidents, punitive damage, loss of opportunity, and etc.) Also, regardless of whether Murata can foresee the events caused by the failure of our product, Murata has no obligations or responsibilities.

The buyer of this product and developer of systems incorporating this product must analyze, evaluate, and make judgements at their own risk in designing applications using this product. The buyer and the developer are responsible for verifying the safety of this product and the applications, and complying with all applicable laws, regulations, and other requirements.

Furthermore, the buyer and developer are responsible for predicting hazards and taking adequate safeguards against potential events at your own risk in order to prevent personal accidents, fire accidents, or other social damage. When using this product, perform thorough evaluation and verification of the safety design designed at your own risk for this product and the application.

Murata assumes that the buyer and developer have the expertise to verify all necessary issues for proper use of the product as described above and to take corrective action. Therefore, Murata has no liability arising out of the use of the product. The buyer and developer should take all necessary evaluations, verifications, corrective actions and etc., in your own responsibility and judgment.

This data sheet does not guarantee or grant any license to the information, including patents, copyrights, and other intellectual property rights, of the Murata or third parties. Regardless of whether the information described in this datasheet is express or implied, Murata does not take any responsibility or liability for any claims, damages, costs, losses, etc. relating to intellectual property rights or other rights from third parties due to the use of these information.

Patent Statement

Murata products are protected under one or more of the U.S. patents.

Copyright and Trademark

©2026 Murata Manufacturing Co., Ltd. All rights reserved.

This product is subject to the following operating requirements and the Life and Safety Critical Application Sales Policy.
Refer to: **https://www.murata.com/products/power/requirements**

Murata Manufacturing Co., Ltd makes no representation that the use of its products in the circuits described herein, or the use of other technical information contained herein, will not infringe upon existing or future patent rights. The descriptions contained herein do not imply the granting of licenses to make, use, or sell equipment constructed in accordance therewith. Specifications and cautions are subject to change without notice.

Copyright ©2026 Murata Manufacturing Co., Ltd. All rights reserved.
Specifications are subject to change without notice.

Downloaded from Arrow.com.