DATE	REV	ECN	APP'D. BY
3-8-16	A3	10594	TRM
8-29-17	A4	11078	TRM

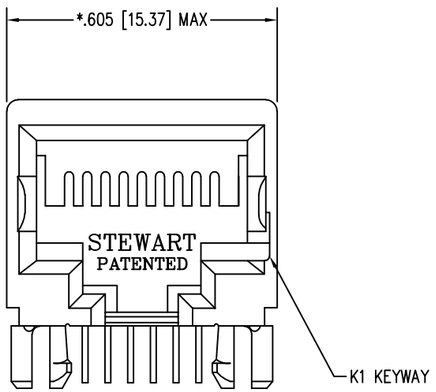

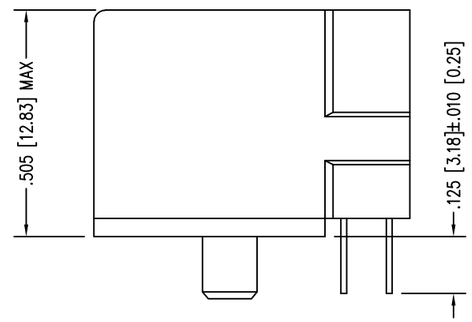

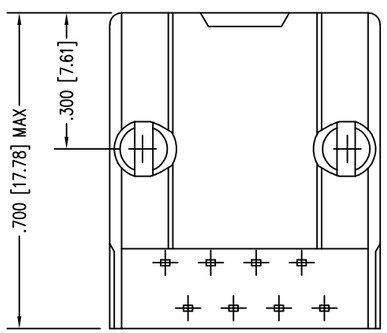

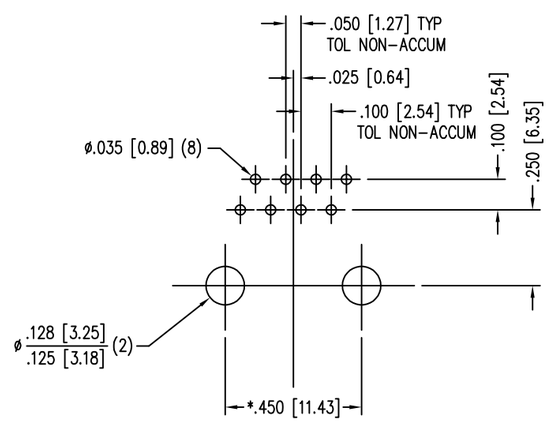

P.C.B. RECOMMENDED HOLE LAYOUT
SEEN FROM COMPONENT SIDE
TOLERANCE ±.003 [0.08] UNLESS OTHERWISE SPECIFIED

NOTES:

1. CONNECTOR MATERIALS:
   HOUSING: THERMOPLASTIC UL94 V-0
   CONTACTS/SHIELD: COPPER ALLOY
   SHIELD PLATING: NICKEL OR TIN
   CONTACT PLATING: SELECTIVE GOLD IN CONTACT AREA
   SEE CHART FOR PART NUMBER
2. FOR PRODUCT SPECIFICATIONS SEE PR022-01.
3. DIMENSIONS AND TOLERANCES COMPLY WITH TIA-1096 STANDARD.

30 MICRO-INCHES [0.76um]	SS-640810-A-NF-K1-A75
CONTACT PLATING IN MATING AREA	PART NUMBER

THIRD ANGLE PROJECTION

DO NOT SCALE DRAWING

DRAWING IS SUBJECT TO CHANGE WITHOUT NOTICE

DIMENSIONS: INCHES [METRIC]

UNLESS OTHERWISE SPECIFIED TOLERANCES ARE ±.005 [0.13] ANGLES ARE ± 1°

SHEET NO. 1 OF 1

RoHS

stewart CONNECTOR a bel group
11118 Susquehanna Trail South
Glen Rock, PA 17327-9199
(717) 235-7512
http://www.stewartconnector.com

TITLE: EIGHT POSITION, EIGHT CONTACT, SHORT VERSION JACK NON-FLANGED, KEYED

THIS DRAWING AND THE SUBJECT MATTER SHOWN THEREON ARE CONFIDENTIAL AND THE PROPRIETARY PROPERTY OF STEWART CONNECTOR AND SHALL NOT BE REPRODUCED, COPIED, OR USED IN ANY MANNER WITHOUT PRIOR WRITTEN CONSENT OF STEWART CONNECTOR. ONE OR MORE U.S. PATENTS MAY APPLY TO THIS PRODUCT. FOR DETAILS, PLEASE VISIT: HTTP://BELFUSE.COM/STEWART/STEWART_PATENTS/

DRN BY: KRL	DATE 1/24/06		
APPD BY: JM	DATE 1-26-06		
DWG NO. CT640125	REV. A4		

AutoCAD

Downloaded from Arrow.com.