Downloaded from Arrow.com.

REVISIONS			
LTR	DESCRIPTION	DATE	APPROVED
B	REVISED PER DCO# 01831	7/18/80	Blair
C	REVISED PER ECN# T- 3040	10-7-82	JB

1. RAYCHEM SOLDER SLEEVE
   (20 per assembly)
   Transparent blue, radiation crosslinked polyvinylidene fluoride containing a solder preform conforming to QQ-S-571 type Sn 63 S RMAP 2.

2. CARRIER STRIP
   Adhesive coated high temperature tape.

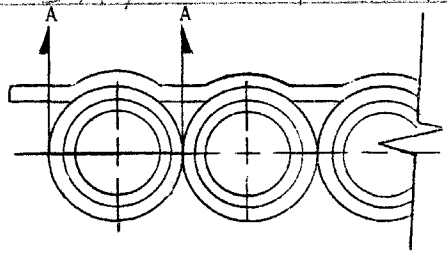

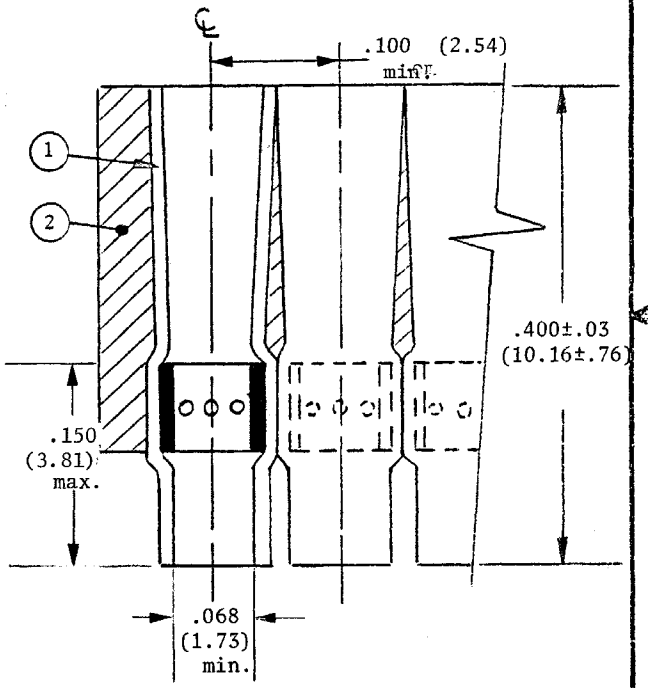

NOTES:
a. This assembly is designed for use with a Raychem AS-4000 Series Wire Organization System to terminate wires to a Raychem SEM Connector. The wire shall have 30 - 24 gauge silver or tin plated conductors and insulation rated for at least 125°C, the O.D. over the jacket shall be .025 and .068.
b. Temperature rating of terminator: -65°C to +125°C.
c. Insulation sleeve will recover to .030, max. I.D.
d. Acceptance sampling shall be in accordance with Inspection Level I of MIL-STD-105. The acceptable quality level (AQL) shall be 4.0.

© 1978 RAYCHEM CORPORATION

DO NOT SCALE THIS DRAWING

CONNECTORS SPECIFICATION CONTROL DRAWING

UNLESS OTHERWISE SPECIFIED DIMENSIONS ARE IN INCHES AND TOLERANCES ARE:
.XXX : ±
.XX : ±
: ±

DRAWN	MS	
CHECKED		
APPROVED	[illegible] 11-3-78	
APPROVED	JB 10/31/78	
APPROVED		
PART NO.		
PROJECT	6448-7029	

MATERIAL

FINISH

RAYCHEM

RAYCHEM CORPORATION
300 CONSTITUTION DRIVE
MENLO PARK, CALIFORNIA 94025

TITLE: Solder Sleeve Wire Terminator Assembly
24 - 30 Gauge Wire/SEM Connector

SIZE	CODE IDENT.	DWG. NO.
A	NO. 06090	CTA-0050

SCALE | WEIGHT | SHEET 1 OF 1