TRACO POWER

Inductor

TCK-150

Order Code	TCK-150
Inductance	68 µH ±20% (at 100 kHz / 1 V)
Impedance (DCR)	636 mΩ max.
Rated Current	0.59 A max.
Operating Temperature	-40°C to +125°C
RoHS Exemptions	No Exemptions
Overview Link	www.tracopower.com/overview/tck-150



Impedance Curve

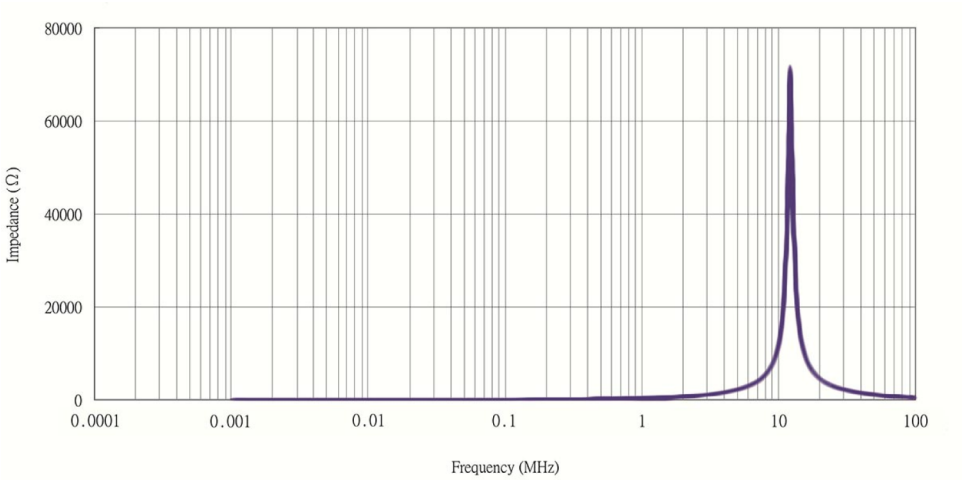

Outline Dimensions

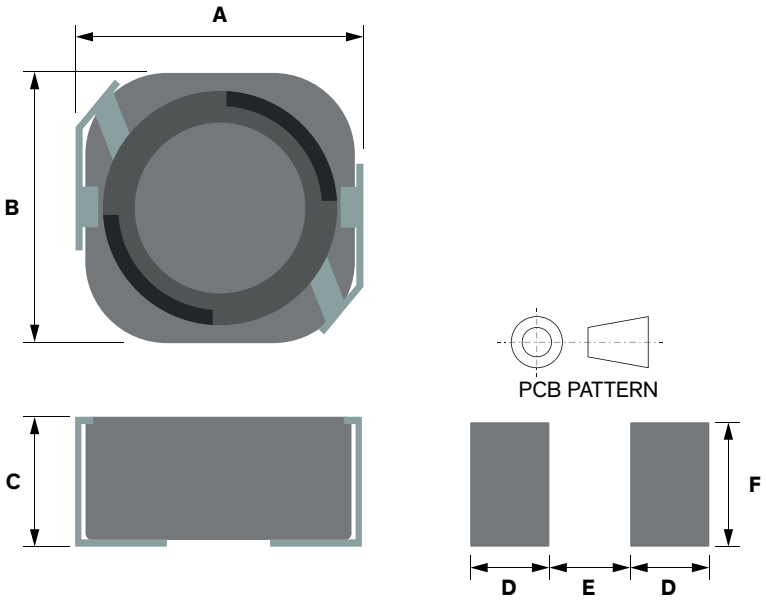

Dimensions [mm]	
A	5.3 ±0.4
B	5.0 ±0.4
C	2.7 ±0.5
D	2
E	2
F	2

All specifications valid at +25°C, unless otherwise stated.

© Copyright 2026 Traco Electronic AG Specifications can be changed without notice.

Downloaded from Arrow.com.