MODEL NO.	PACKAGING
145-0711-802	ONE PCS PER BAG

REV	ECO	DATE
001	ECO-19-0024	07/05/2019

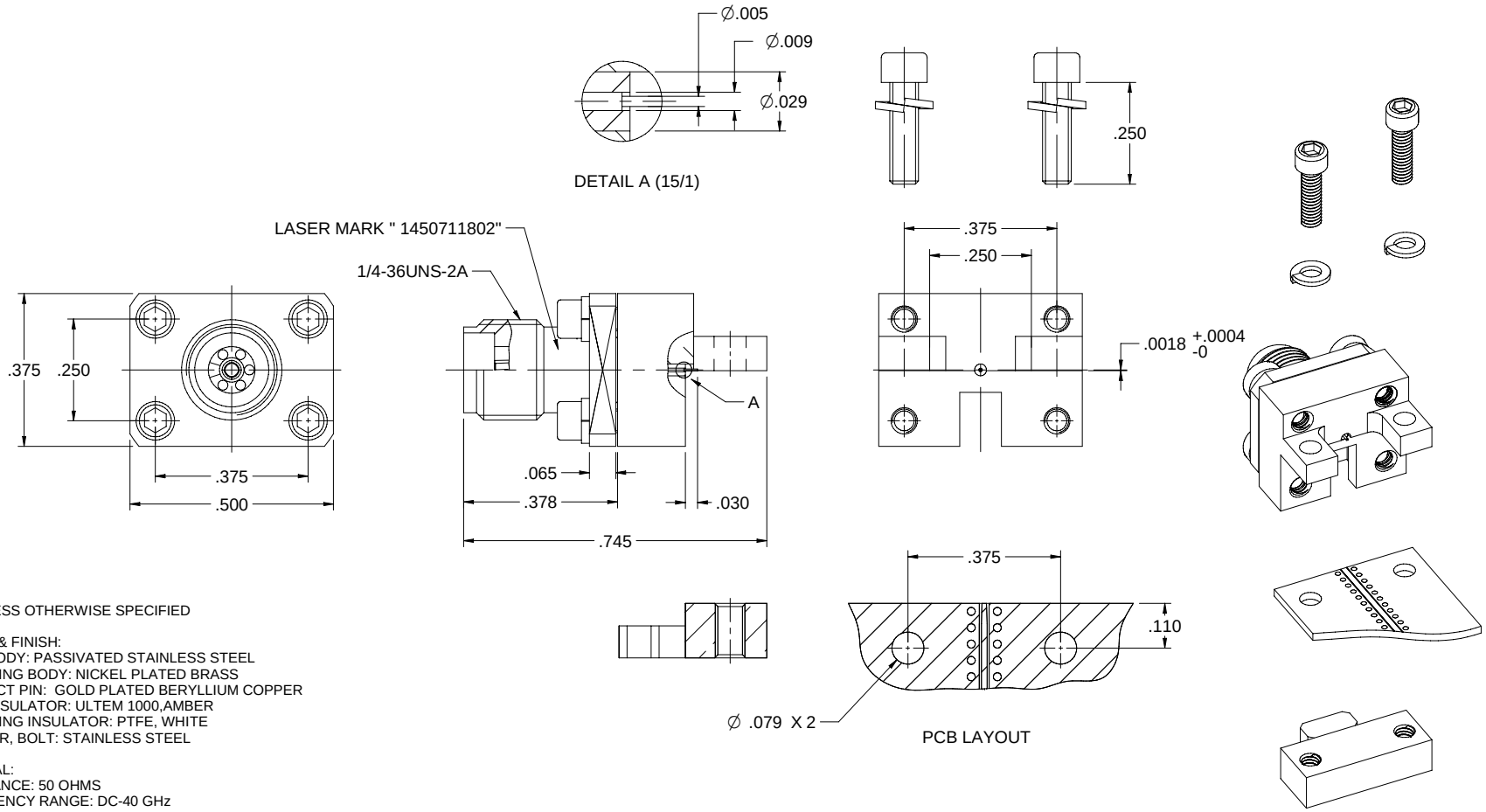

NOTES: UNLESS OTHERWISE SPECIFIED

1. MATERIAL & FINISH:
   1.1 MAIN BODY: PASSIVATED STAINLESS STEEL
   1.2 MOUNTING BODY: NICKEL PLATED BRASS
   1.3 CONTACT PIN: GOLD PLATED BERYLLIUM COPPER
   1.4 MAIN INSULATOR: ULTEM 1000,AMBER
   1.5 MOUNTING INSULATOR: PTFE, WHITE
   1.6 WASHER, BOLT: STAINLESS STEEL

2. ELECTRICAL:
   2.1 IMPEDANCE: 50 OHMS
   2.2 FREQUENCY RANGE: DC-40 GHz
   2.3 VOLTAGE STANDING WAVE RATIO: 1.2 MAX
   2.4 DIELECTRIC WITHSTANDING VOLTAGE: 750 VRMS MIN
   2.5 CONTACT RESISTANCE:
      2.5.1 CENTER CONTACT: 3 MILLIOHMS MAX
      2.5.2 OUTER CONTACT: 2 MILLIOHMS MAX

3. MECHANICAL:
   3.1 DURABILITY: 500CYCLES MIN

4. ENVIRONMENT:
   4.1 OPERATING TEMPERATURE: -55 TO 125°C
   4.2 THERMAL SHOCK: MIL-STD-202, METHOD 107, CONDITION B.
   4.3 SHOCK: MIL-STD-202, METHOD 213, CONDITION I
   4.4 VIBRATION: MIL-STD-202, METHOD 204, CONDITION D
   4.5 MOISTURE RESISTANCE: MIL-STD-202, METHOD 106
   4.6 SALT SPRAY: MIL-STD-202, METHOD 101, CONDITION B

cinch	Model No. 145-0711-801/810	Cage Code	Johnson
	RoHS2 2011/65/EU	3RD ANGLE PROJECTION	Title: END LAUNCH JACK SCREW-ON TYPE LOW PROFILE 2.92mm(SMK). 0.005" PIN
	UNLESS OTHERWISE SPECIFIED UNITS: INCH .XXX ±.02 .XXXX ±.01 ANGLES ±5°	Drawn by: Betty.Yu	Drawing No. 145-0711-801/810 Rev. 001
		Date: 07/05/2019	Size C DO NOT SCALE DRAWING Workmanship Std NONE Sheet 1 of 1

Please read our datasheet & drawing disclaimer here.

Downloaded from Arrow.com.