MICRO SWITCH
a Honeywell Division
FED. MFG. CODE 91929

SWITCH – ENCLOSED

CATALOG LISTING
1HE44–RB

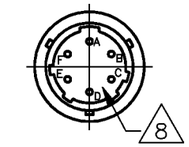

RECEPTACLE DETAIL

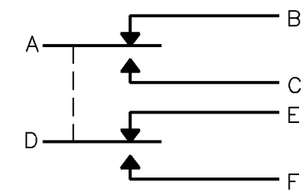

CIRCUIT DIAGRAM

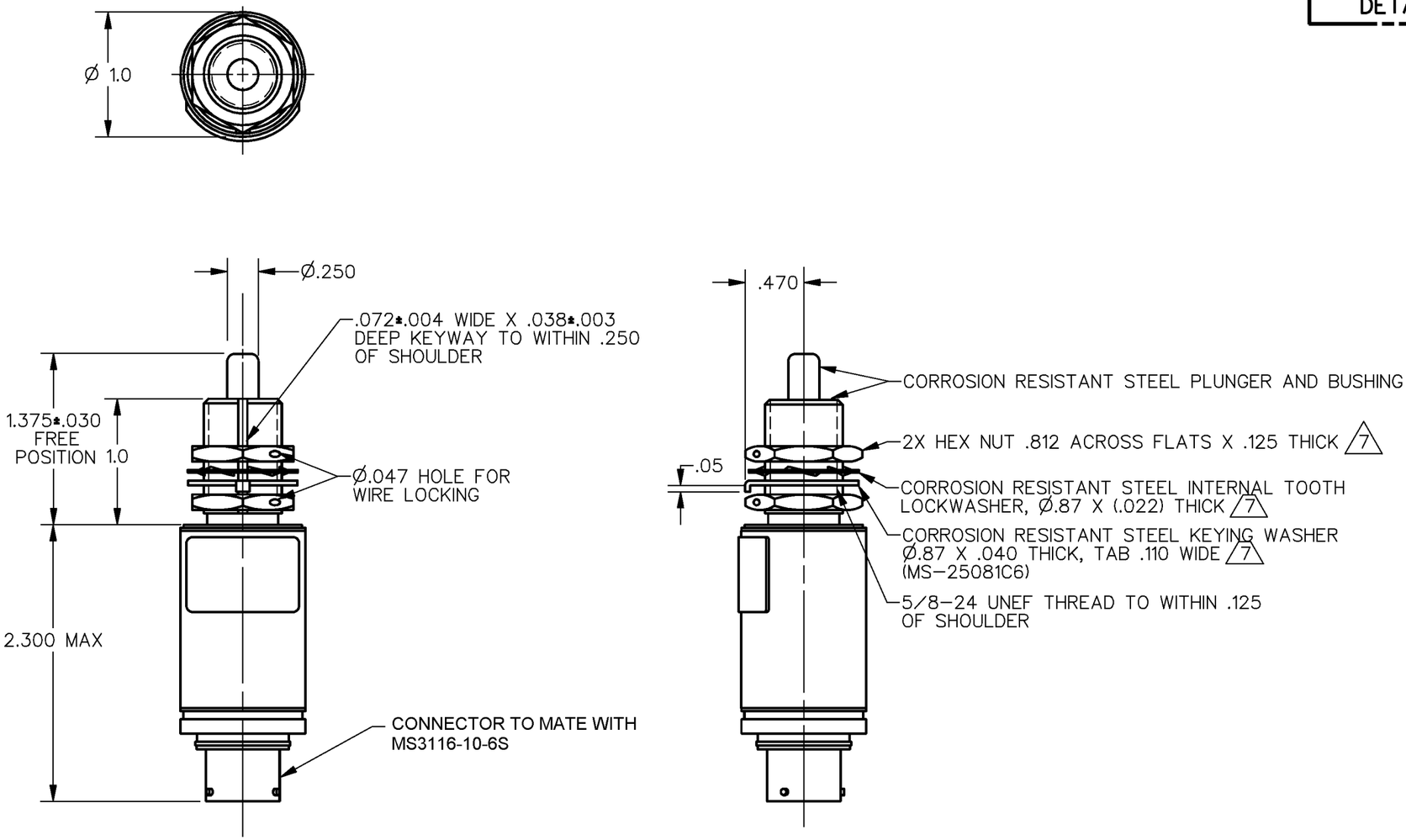

NOTES
1 – CORROSION RESISTIVE STEEL ENCLOSURE NO. 15193 PER FED. STD. 595
2 – SWITCH SEALED PER MIL–PRF–8805 SYMBOL 5
3 – CIRCUIT DIAGRAM, DATE CODE, FED. MFG. CODE AND CATALOG LISTING ARE SHOWN ON NAMEPLATE
4 – FOR OPERATION IN TEMPERATURES OF –65°F TO +257°F
5 – PLUNGER SEAL MATERIAL E.P. RUBBER
6 – COINCIDENCE OF OPERATING AND RELEASING POINTS: .010 INCH OF PLUNGER TRAVEL
7 HARDWARE MAY BE PACKAGED UNASSEMBLED PER MIL–PRF–8805
8 INTERFACIAL SEAL

THIS DRAWING COVERS A PROPRIETARY ITEM AND IS THE PROPERTY OF MICRO SWITCH. A DIVISION OF HONEYWELL. THIS DRAWING IS NOT TO BE COPIED OR USED WITHOUT THE APPROVAL OF MICRO SWITCH

THIRD ANGLE PROJECTION

SCALE FULL

DO NOT SCALE PRINT

CHARACTERISTICS

OPERATING FORCE	6–12 LB
FULL OVERTRAVEL FORCE	30 LB MAX
RELEASE FORCE	4 LB MIN
PRETRAVEL	.040 MAX
DIFFERENTIAL TRAVEL	.020 MAX
OVERTRAVEL	.250 MIN

ELECTRICAL DATA

CONTACT ARRANGEMENT
2X S P D T

LOAD	28 VDC	
	SEA LEVEL	100,000 FT.
RES	5	5
IND	3	3
MOTOR	4	4

UNLESS OTHERWISE SPECIFIED TOLERANCES ARE

ONE PLACE	(.0)	±.030
TWO PLACE	(.00)	±.015
THREE PLACE	(.000)	±.005
ANGLES		±

WEIGHT 5.5 OZ MAX

ANSI Y14.5M–1982 APPLIES

CATALOG LISTING 1HE44–RB
PAGE 1 OF 1
ISSUE M 11
RELEASE NO. PR–19824 REPLACES
CHECK 07OCT08
REVISIONS
A OBS. C068450 CSL 23 AUG 90
B REINST. PR19824 SAV 27 JAN 92
C CO–81044B G J W 1 OCT 96
D CO–93970 S A V 14 JAN 99
E 0044462 JA 07OCT08
CHECK BLR 27JUN92
D A W 27JUN92
CHECK
DRAWN S A V 27JAN92
RASTER

Downloaded from Arrow.com.