REVISIONS					
REV	ECO	DESCRIPTION	DATE	BY	APPR
A3	-	RELEASE CUSTOMER DRAWING	22FEB14	JARRY	

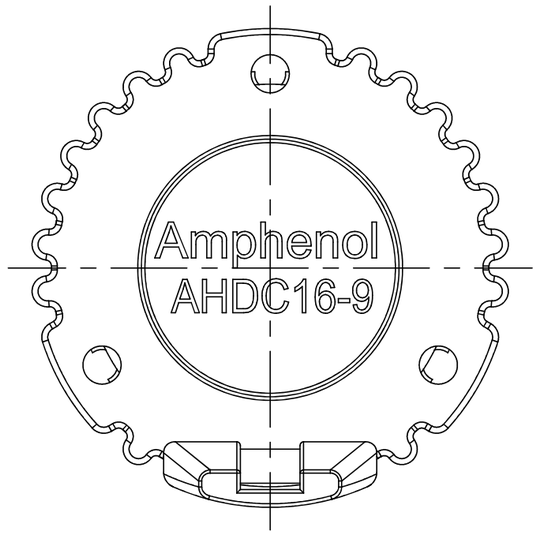

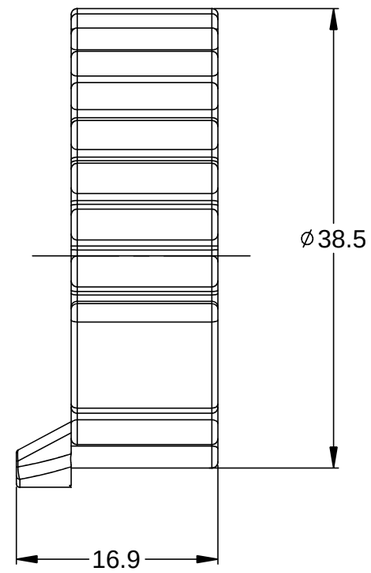

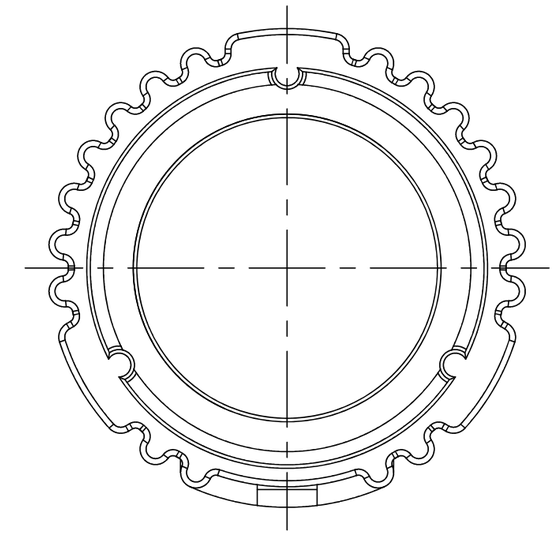

PART NUMBER CHART	
COLOR	PART NUMBER
GREY	AHDC-16-9
BLACK	AHDC-16-9-BLK

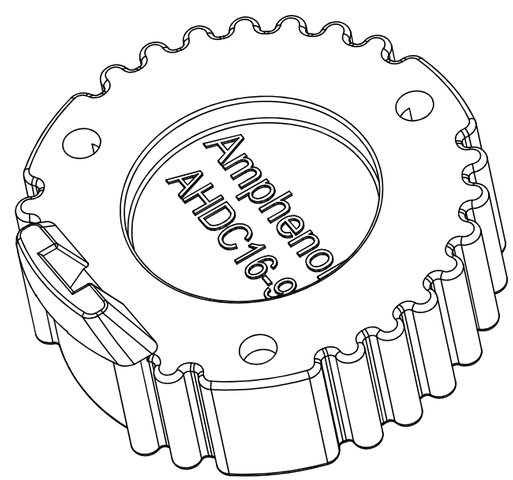

NOTES: UNLESS OTHERWISE SPECIFIED

1. MATERIAL: THERMOPLASTIC
2. COMPATIBLE WITH ALL 9 POSITION AHD SERIES RECEPTACLES
3. RoHS COMPLIANT.
4. ALL DIMENSIONS ARE FOR REFERENCE USE ONLY.

	SEE CHART		
	PART NUMBER	DESCRIPTION	ITEM
QUANTITY	MATERIALS LIST		

UNLESS OTHERWISE SPECIFIED
1) All dimensions are in metric(mm).
2) Tolerances are as follows:
1 PL DEC ±0.30
2 PL DEC ±0.15
3 PL DEC ±0.08
Fractions ±1/64
Angles ±1°
3) Note reference = X

MATERIAL SPECIFICATIONS:

PROCESS SPECIFICATIONS:

NEXT ASS'Y:

SIGNATURES		DATE
DRAWN:	JARRY	22FEB14
CHECKED:		
ENGINEER:		
APPROVAL:		
CUSTOMER:		

THIS DRAWING IS SUPPLIED FOR INFORMATION ONLY. DESIGN FEATURES, SPECIFICATIONS AND PERFORMANCE DATA SHOWN HEREON ARE THE PROPERTY OF THE AMPHENOL CORPORATION. NO RIGHTS OF REPRODUCTION ARE IMPLIED. ALL DIMENSIONS ARE SUBJECT TO NORMAL MANUFACTURING VARIATIONS.

Amphenol
Sine Systems - www.amphenol-sine.com
44724 Morley Drive
Clinton Township, MI 48036

RECEPTACLE CAP,9 POSITION, AHD

SIZE	TYPE	DWG NO:	REVISION
B	C-	AHDC-16-9-XXX	A3

SCALE: NONE SHEET 1 OF 1

TITLE: RECEPTACLE CAP,9 POSITION, AHD
DWG NO: AHDC-16-9-XXX
REV: A3
SH: 1
OF: 1

Downloaded from Arrow.com.