SERIES: VGS-350D | DESCRIPTION: AC-DC POWER SUPPLY

FEATURES

- 85 ~ 305 Vac, 120 ~ 430 Vdc input voltage
- adjustable output voltage
- certified to UL/EN/BS EN 62368-1
- designed to meet EN 60335, EN 61558, and GB 4943
- CISPR32/EN55032 CLASS B compliant
- temperature range -40 °C ~ +85 °C with derating
- baseplate cooling
- over-temperature, output over-voltage, over-current, short-circuit protection
- over-current & short-circuit protection delay
- 5,000 m operating altitude
- accepts AC or DC input (dual-use of same terminal)
- 150% peak load output for 1 second

MODEL

MODEL	output voltage typ (Vdc)	output voltage range (Vdc)	output current max (A)	output power max (W)	ripple and noise[1] typ (mVp-p)	efficiency[2] typ (%)
VGS-350D-5	5	4.5~5.5	60.0	300.0	200	90
VGS-350D-12	12	11.4~12.6	29.2	350.4	200	92
VGS-350D-24	24	22.8~25.2	14.6	350.4	240	94
VGS-350D-36	36	34.2~37.8	9.75	351.0	240	94
VGS-350D-48	48	45.6~50.4	7.32	350.4	240	94

Note:
1. Ripple and noise are measured at 20 MHz BW with 47 uF aluminum electrolytic capacitor and 0.1 uF ceramic capacitor on the output.
2. Measured at 230 Vac.
3. Unless otherwise specified, the parameters in this datasheet were measured under the conditions of Ta=25°C, humidity<75% RH with nominal input voltage and rated output load.

PART NUMBER KEY

VGS-350D - XX

Base Number — Output Voltage

Please read our datasheet & drawing disclaimer here.

Downloaded from Arrow.com.

INPUT

parameter	conditions/description	min	typ	max	units
voltage range	ac input dc input	85 120		305 430	Vac Vdc
frequency range		47		63	Hz
current	at 115 Vac at 230 Vac			4 2	A A
inrush current	at 115 Vac, cold start at 230 Vac, cold start		30 60		A A
leakage current	at 240 Vac			0.5	mA
power factor	at 115 Vac, full load at 230 Vac, full load		0.98 0.98		

OUTPUT

parameter	conditions/description	min	typ	max	units
capacitive load	at 25°C 5 Vdc output model 12 Vdc output model 24 Vdc output model 36 Vdc output model 48 Vdc output model			 12,000 10,000 8,000 6,000 4,000	 µF µF µF µF µF
initial set point acuracy	5 Vdc output model, full load range all other models, full load range		±2 ±1		% %
line regulation	5 Vdc output model, rated load all other models, rated load		±0.5 ±0.3		%
load regulation	5 V model at 230 Vac, 0~100% load all other models at 230 Vac, 0~100% load		±1 ±0.5		% %
hold-up time	at 115 & 230 Vac, full load		12		ms

PROTECTIONS

parameter	conditions/description	min	typ	max	units
over current protection[4]	normal & high temperature	110		200	%
	low temperature			110	%
over voltage protection	5 Vdc output model, hiccup 12 Vdc output model, hiccup 24 Vdc output model, hiccup 36 Vdc output model, hiccup 48 Vdc output model, hiccup			6.5 15.6 31.6 46.8 62.4	Vdc Vdc Vdc Vdc Vdc
short circuit protection	hiccup, continuous, auto recovery				
over temperature protection	output shutdown, auto recovery				

Note: 4. Delay protection, delay time is 1s with auto recovery after the abnormality is removed.

Downloaded from Arrow.com.

SAFETY & COMPLIANCE

parameter	conditions/description	min	typ	max	units
isolation voltage	input to output for 1 minute, 5 mA max input to ground for 1 minute, 5 mA max output to ground for 1 minute, 5 mA max	4,000 2,000 1,500			Vac Vac Vac
safety approvals	certified to 62368[5]: UL, EN, BS EN designed to meet 60335: EN designed to meet 61558: EN designed to meet 4943: GB				
safety class	Class I				
conducted emissions	CISPR32/EN55032 CLASS B				
radiated emissions	CISPR32/EN55032 CLASS B				
harmonic current	IEC/EN61000-3-2 CLASS A				
voltage flicker	IEC/EN6100-3-2				
ESD	IEC/EN 61000-4-2 Contact ±6KV/Air ±8KV, perf. Criteria A				
radiated immunity	IEC/EN 61000-4-3 10V/m, perf. Criteria A				
EFT/burst	IEC/EN 61000-4-4 ±2KV, perf. Criteria A				
surge	IEC/EN 61000-4-5 line to line ±2KV/line to ground ±4KV, perf. Criteria A				
conducted immunity	IEC/EN61000-4-6 10Vrms, perf. Criteria A				
voltage dips and interruption	IEC/EN61000-4-11 0%, 70%, perf. Criteria B				
intercom interference test	MS-SOP-DQC-007, perf. Criteria B				
RoHS compliant	yes				
MTBF	as per MIL-HDBK-217F at 25 °C	300,000			hrs

Note: 5. Certification applies to 100~240Vac, 200~240Vdc.

ENVIRONMENTAL

parameter	conditions/description	min	typ	max	units
operating temperature	see derating curve	-40		85	°C
storage temperature		-40		85	°C
storage humidity	non-condensing	10		95	%

MECHANICAL

parameter	conditions/description	min	typ	max	units
dimensions	220.00 x 62.00 x 31.00				mm
weight			680		g
cooling	natural convection				
case material	metal (AL6063, SGCC)				

Downloaded from Arrow.com.

MECHANICAL DRAWING

units: mm [inches]
tolerance: ±1.00 [±0.039]
ADJ: Output voltage adjustable resistor.
Wire range: 22~14 AWG
Tightening torque: M3, Max 0.5 N·m

PIN OUT	
PIN	Function
1	⏚
2	AC (N)
3	AC (L)
4	+Vo
5	+Vo
6	-Vo
7	-Vo

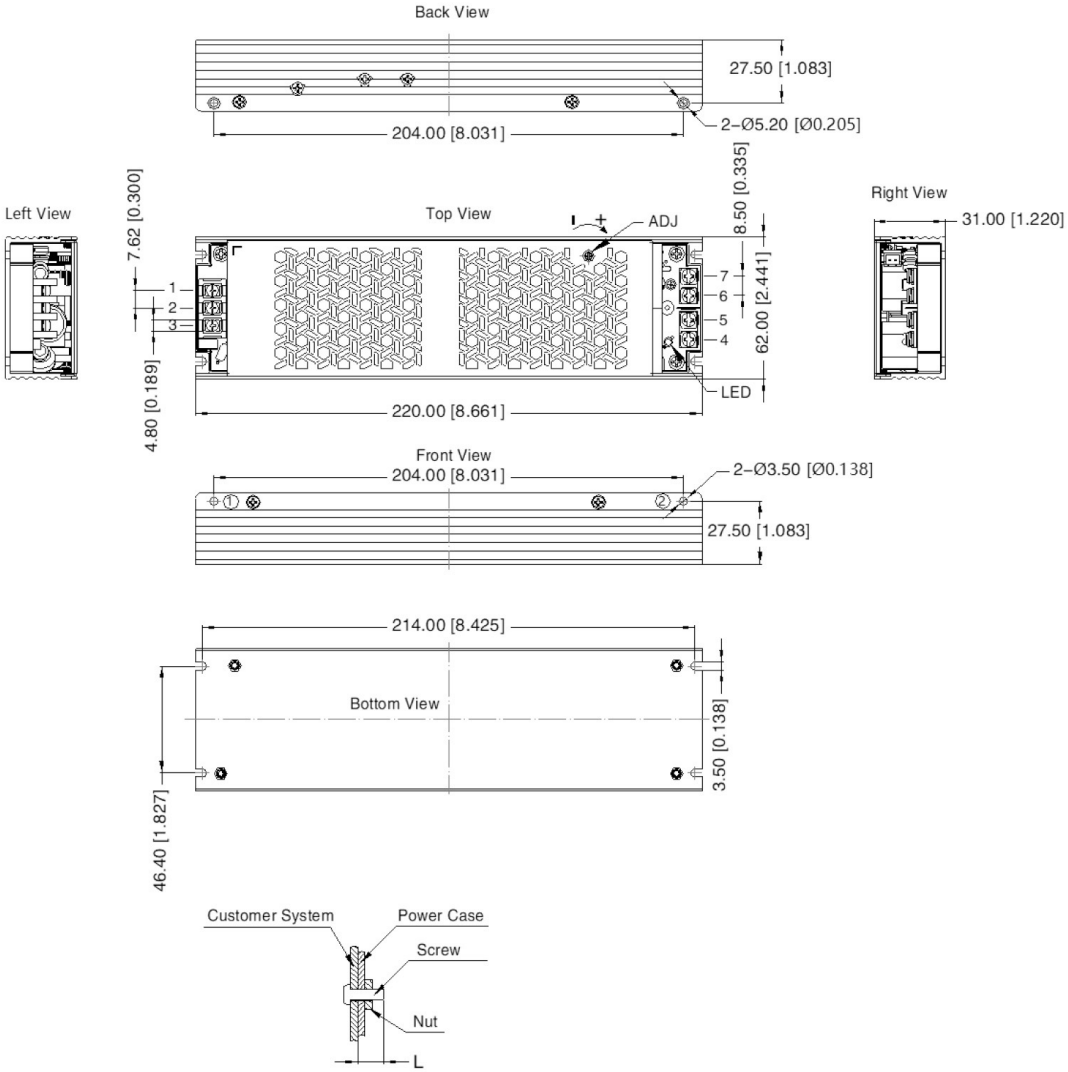

Position	Screw Spec.	L (suggested)	Torque (max)
① ~②	M3	6 mm	0.4 N·m

Downloaded from Arrow.com.

INSTALATION DIAGRAM

Figure 1

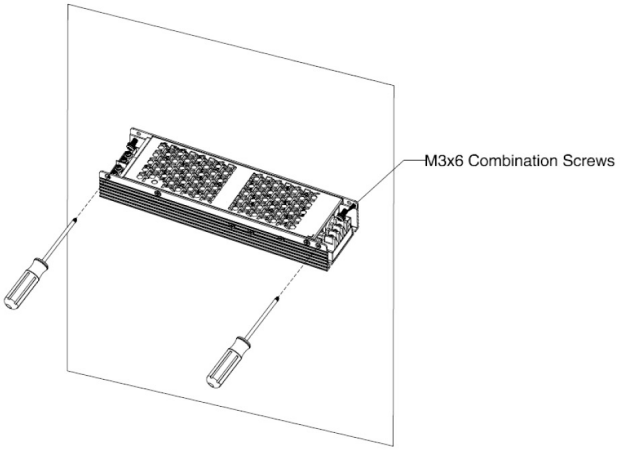

Figure 2

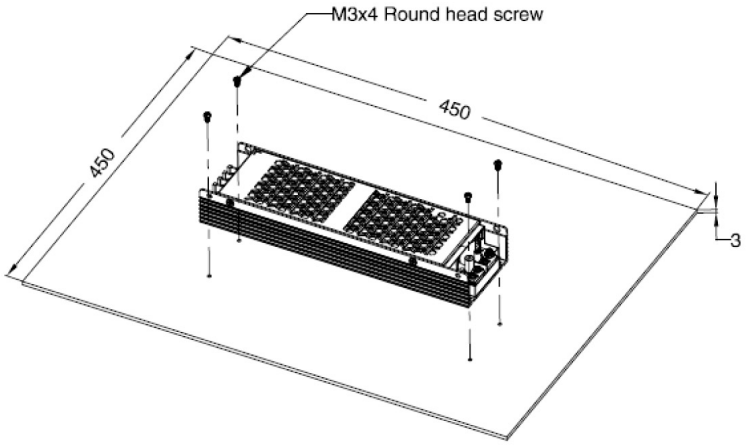

Note:
6. Figure 1 is a schematic diagram of side installation, install with M3 × 6 combination screws.
   Refer to the derating curve without aluminum plate.
7. Figure 2 is the schematic diagram of the bottom installation, install with M3 × 4 round head screws, it is necessary to apply thermal grease on the bottom of the product.
   Refer to the derating curve with aluminum plate.

Downloaded from Arrow.com.

DERATING CURVES

TEMPERATURE DERATING CURVE with aluminum plate (85~305 Vac, 120~430 Vdc)

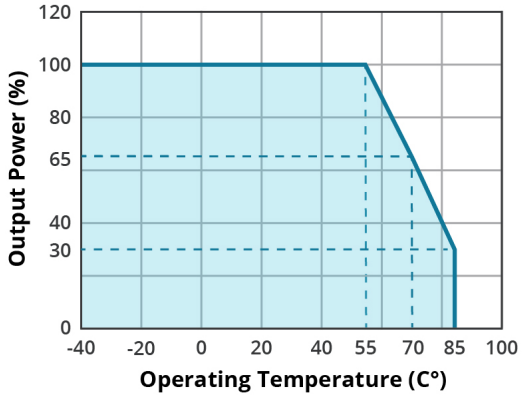

TEMPERATURE DERATING CURVE without aluminum plate (85~305 Vac, 120~430 Vdc)

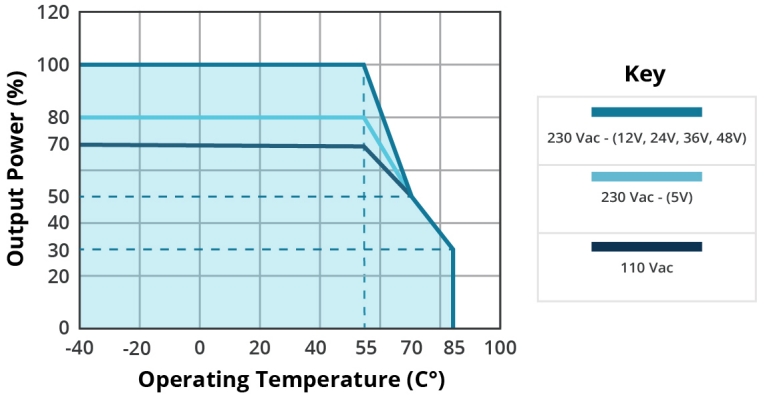

INPUT VOLTAGE DERATING CURVE (25°C)

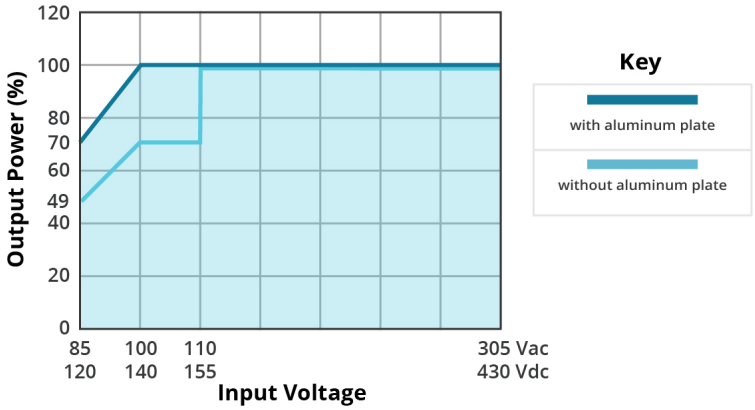

Note:
8. With an AC input voltage between 80 ~ 100 Vac and a DC input between 120 ~ 140 Vdc the output power must be derated as per the temperature derating curves.
9. This product is suitable for applications using natural convection. For applications in closed enviroment please consult CUI.

EFFICIENCY CURVES

EFFICIENCY VS INPUT VOLTAGE (full load)

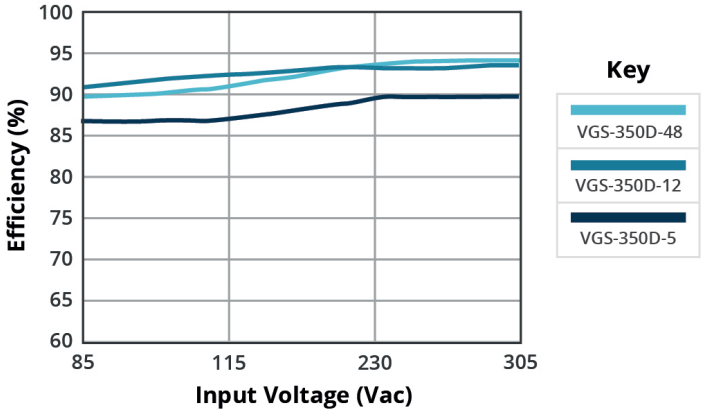

EFFICIENCY VS OUTPUT CURRENT (Vin = 230 Vac)

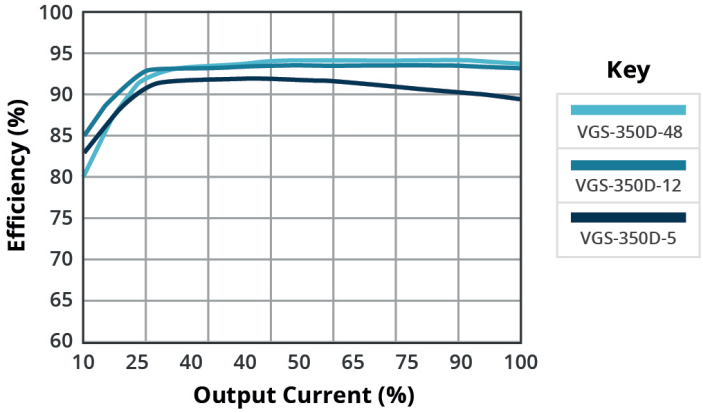

Downloaded from Arrow.com.

REVISION HISTORY

rev.	description	date
1.0	initial release	10/31/2023

The revision history provided is for informational purposes only and is believed to be accurate.

CUI INC
a bel group

Headquarters
20050 SW 112th Ave.
Tualatin, OR 97062
800.275.4899

Fax 503.612.2383
cui.com
techsupport@cui.com

CUI offers a two (2) year limited warranty. Complete warranty information is listed on our website.

CUI reserves the right to make changes to the product at any time without notice. Information provided by CUI is believed to be accurate and reliable. However, no responsibility is assumed by CUI for its use, nor for any infringements of patents or other rights of third parties which may result from its use.

CUI products are not authorized or warranted for use as critical components in equipment that requires an extremely high level of reliability. A critical component is any component of a life support device or system whose failure to perform can be reasonably expected to cause the failure of the life support device or system, or to affect its safety or effectiveness.

Downloaded from Arrow.com.