P89V51RB2/RC2/RD2

8-bit 80C51 5 V low power 16/32/64 kB flash microcontroller with 1 kB RAM

Rev. 05 — 12 November 2009 Product data sheet

1. General description

The P89V51RB2/RC2/RD2 are 80C51 microcontrollers with 16/32/64 kB flash and 1024 B of data RAM.

A key feature of the P89V51RB2/RC2/RD2 is its X2 mode option. The design engineer can choose to run the application with the conventional 80C51 clock rate (12 clocks per machine cycle) or select the X2 mode (six clocks per machine cycle) to achieve twice the throughput at the same clock frequency. Another way to benefit from this feature is to keep the same performance by reducing the clock frequency by half, thus dramatically reducing the EMI.

The flash program memory supports both parallel programming and in serial ISP. Parallel programming mode offers gang-programming at high speed, reducing programming costs and time to market. ISP allows a device to be reprogrammed in the end product under software control. The capability to field/update the application firmware makes a wide range of applications possible.

The P89V51RB2/RC2/RD2 is also capable of IAP, allowing the flash program memory to be reconfigured even while the application is running.

2. Features

- 80C51 CPU
- 5 V operating voltage from 0 MHz to 40 MHz
- 16/32/64 kB of on-chip flash user code memory with ISP and IAP
- Supports 12-clock (default) or 6-clock mode selection via software or ISP
- SPI and enhanced UART
- PCA with PWM and capture/compare functions
- Four 8-bit I/O ports with three high-current port 1 pins (16 mA each)
- Three 16-bit timers/counters
- Programmable watchdog timer
- Eight interrupt sources with four priority levels
- Second DPTR register
- Low EMI mode (ALE inhibit)
- TTL- and CMOS-compatible logic levels

founded by Philips

Downloaded from Arrow.com.

- Brownout detection
- Low power modes
  - Power-down mode with external interrupt wake-up
  - Idle mode
- DIP40, PLCC44 and TQFP44 packages

3. Ordering information

Table 1. Ordering information

Type number	Package		
	Name	Description	Version
P89V51RB2FA	PLCC44	plastic leaded chip carrier; 44 leads	SOT187-2
P89V51RB2FN	DIP40	plastic dual in-line package; 40 leads (600 mil)	SOT129-1
P89V51RB2BBC	TQFP44	plastic thin quad flat package; 44 leads; body 10 × 10 × 1.0 mm	SOT376-1
P89V51RC2FA	PLCC44	plastic leaded chip carrier; 44 leads	SOT187-2
P89V51RC2FBC	TQFP44	plastic thin quad flat package; 44 leads; body 10 × 10 × 1.0 mm	SOT376-1
P89V51RC2FN	DIP40	plastic dual in-line package; 40 leads (600 mil)	SOT129-1
P89V51RD2FA	PLCC44	plastic leaded chip carrier; 44 leads	SOT187-2
P89V51RD2FBC	TQFP44	plastic thin quad flat package; 44 leads; body 10 × 10 × 1.0 mm	SOT376-1
P89V51RD2BN	DIP40	plastic dual in-line package; 40 leads (600 mil)	SOT129-1
P89V51RD2FN	DIP40	plastic dual in-line package; 40 leads (600 mil)	SOT129-1

3.1 Ordering options

Table 2. Ordering options

Type number	Flash memory	Temperature range	Frequency
P89V51RB2FA	16 kB	–40 °C to +85 °C	0 MHz to 40 MHz
P89V51RB2FN	16 kB	–40 °C to +85 °C	
P89V51RB2BBC	16 kB	0 °C to +70 °C	
P89V51RC2FA	32 kB	–40 °C to +85 °C	
P89V51RC2FBC	32 kB	–40 °C to +85 °C	
P89V51RC2FN	32 kB	–40 °C to +85 °C	
P89V51RD2FA	64 kB	–40 °C to +85 °C	
P89V51RD2FBC	64 kB	–40 °C to +85 °C	
P89V51RD2BN	64 kB	0 °C to +70 °C	
P89V51RD2FN	64 kB	–40 °C to +85 °C	

© NXP B.V. 2009. All rights reserved.

Downloaded from Arrow.com.

4. Block diagram

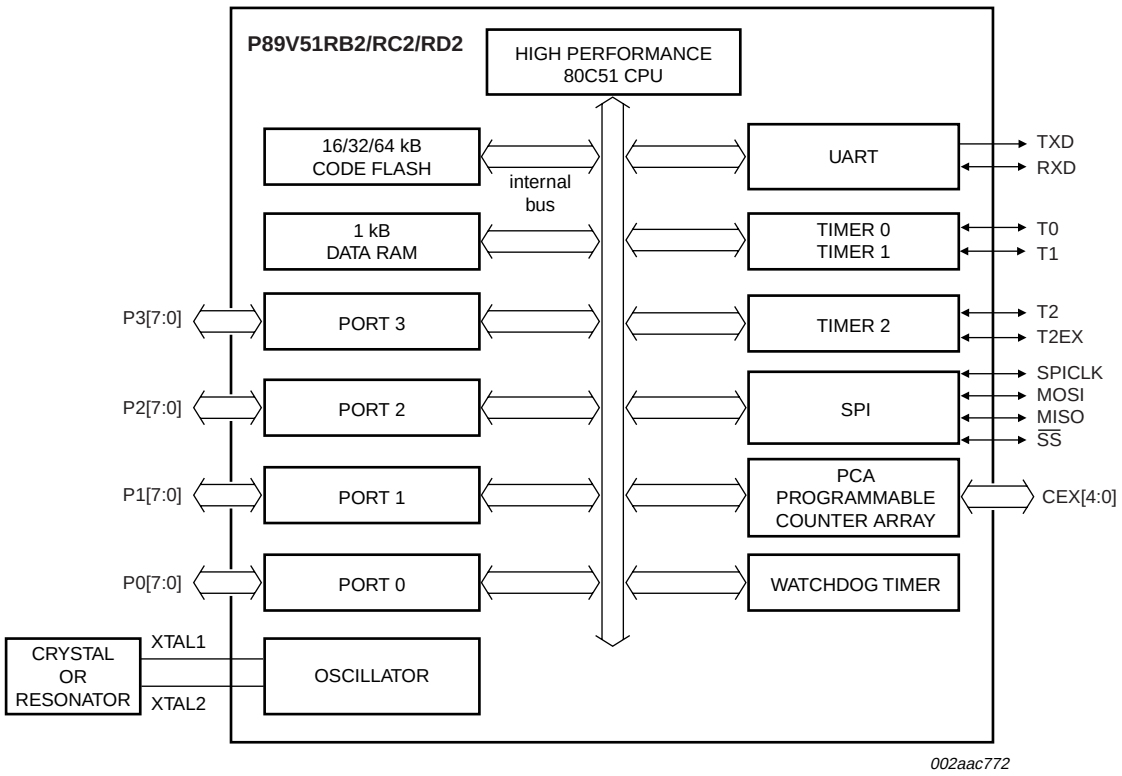

Fig 1. Block diagram

© NXP B.V. 2009. All rights reserved.

Downloaded from Arrow.com.

5. Pinning information

5.1 Pinning

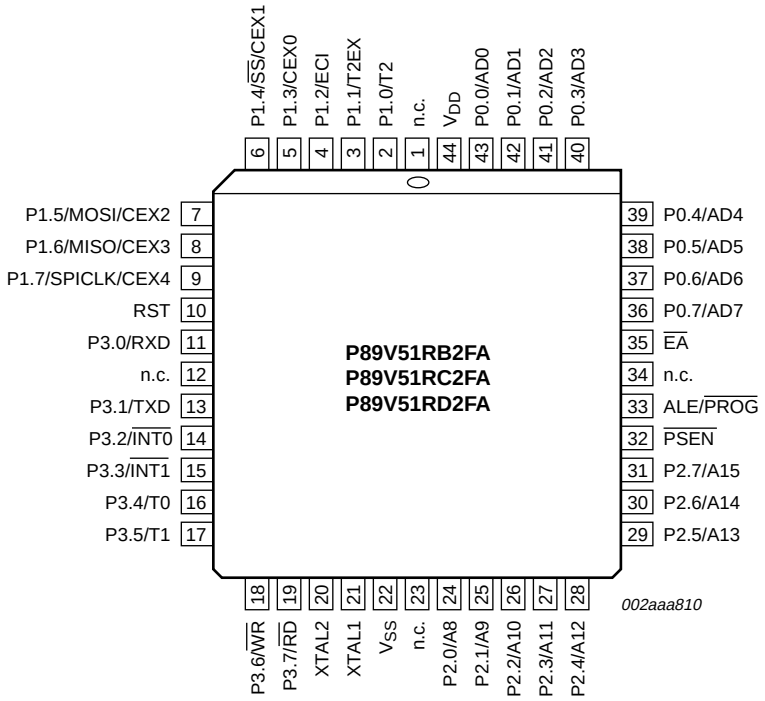

Fig 2. PLCC44 pin configuration

© NXP B.V. 2009. All rights reserved.

Downloaded from Arrow.com.

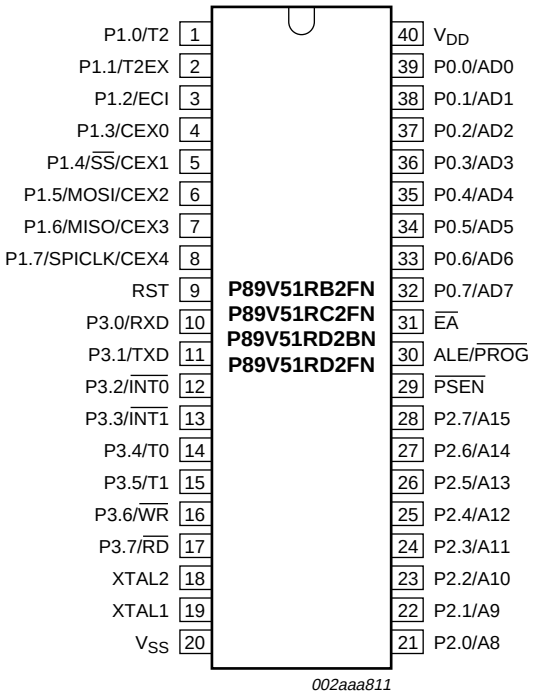

Fig 3. DIP40 pin configuration

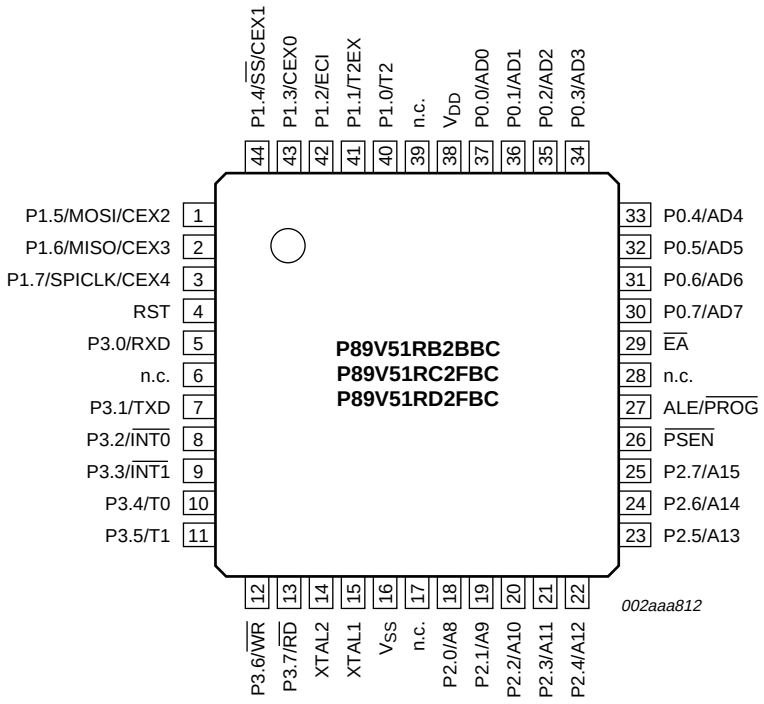

Fig 4. TQFP44 pin configuration

© NXP B.V. 2009. All rights reserved.

Downloaded from Arrow.com.

5.2 Pin description

Table 3. P89V51RB2/RC2/RD2 pin description

Symbol	Pin			Type	Description
	DIP40	TQFP44	PLCC44		
P0.0 to P0.7				I/O	**Port 0:** Port 0 is an 8-bit open drain bidirectional I/O port. Port 0 pins that have '1's written to them float, and in this state can be used as high-impedance inputs. Port 0 is also the multiplexed low-order address and data bus during accesses to external code and data memory. In this application, it uses strong internal pull-ups when transitioning to '1's. Port 0 also receives the code bytes during the external host mode programming, and outputs the code bytes during the external host mode verification. External pull-ups are required during program verification or as a general purpose I/O port.
P0.0/AD0	39	37	43	I/O	**P0.0 —** Port 0 bit 0.
				I/O	**AD0 —** Address/data bit 0.
P0.1/AD1	38	36	42	I/O	**P0.1 —** Port 0 bit 1.
				I/O	**AD1 —** Address/data bit 1.
P0.2/AD2	37	35	41	I/O	**P0.2 —** Port 0 bit 2.
				I/O	**AD2 —** Address/data bit 2.
P0.3/AD3	36	34	40	I/O	**P0.3 —** Port 0 bit 3.
				I/O	**AD3 —** Address/data bit 3.
P0.4/AD4	35	33	39	I/O	**P0.4 —** Port 0 bit 4.
				I/O	**AD4 —** Address/data bit 4.
P0.5/AD5	34	32	38	I/O	**P0.5 —** Port 0 bit 5.
				I/O	**AD5 —** Address/data bit 5.
P0.6/AD6	33	31	37	I/O	**P0.6 —** Port 0 bit 6.
				I/O	**AD6 —** Address/data bit 6.
P0.7/AD7	32	30	36	I/O	**P0.7 —** Port 0 bit 7.
				I/O	**AD7 —** Address/data bit 7.
P1.0 to P1.7				I/O with internal pull-up	**Port 1:** Port 1 is an 8-bit bidirectional I/O port with internal pull-ups. The Port 1 pins are pulled high by the internal pull-ups when '1's are written to them and can be used as inputs in this state. As inputs, Port 1 pins that are externally pulled LOW will source current (I_{IL}) because of the internal pull-ups. P1.5, P1.6, P1.7 have high current drive of 16 mA. Port 1 also receives the low-order address bytes during the external host mode programming and verification.
P1.0/T2	1	40	2	I/O	**P1.0 —** Port 1 bit 0.
				I/O	**T2 —** External count input to Timer/counter 2 or Clock-out from Timer/counter 2.
P1.1/T2EX	2	41	3	I/O	**P1.1 —** Port 1 bit 1.
				I	**T2EX**: Timer/counter 2 capture/reload trigger and direction control.

© NXP B.V. 2009. All rights reserved.

Downloaded from Arrow.com.

Table 3. P89V51RB2/RC2/RD2 pin description *...continued*

Symbol	Pin			Type	Description
	DIP40	TQFP44	PLCC44		
P1.2/ECI	3	42	4	I/O	**P1.2 —** Port 1 bit 2.
				I	**ECI —** External clock input. This signal is the external clock input for the PCA.
P1.3/CEX0	4	43	5	I/O	**P1.3 —** Port 1 bit 3.
				I/O	**CEX0 —** Capture/compare external I/O for PCA Module 0. Each capture/compare module connects to a Port 1 pin for external I/O. When not used by the PCA, this pin can handle standard I/O.
P1.4/$\overline{SS}$/CEX1	5	44	6	I/O	**P1.4 —** Port 1 bit 4.
				I	**$\overline{SS}$ —** Slave port select input for SPI.
				I/O	**CEX1 —** Capture/compare external I/O for PCA Module 1.
P1.5/MOSI/ CEX2	6	1	7	I/O	**P1.5 —** Port 1 bit 5.
				I/O	**MOSI —** Master Output Slave Input for SPI.
				I/O	**CEX2 —** Capture/compare external I/O for PCA Module 2.
P1.6/MISO/ CEX3	7	2	8	I/O	**P1.6 —** Port 1 bit 6.
				I/O	**MISO —** Master Input Slave Output for SPI.
				I/O	**CEX3 —** Capture/compare external I/O for PCA Module 3.
P1.7/SPICLK/ CEX4	8	3	9	I/O	**P1.7 —** Port 1 bit 7.
				I/O	**SPICLK —** Serial clock input/output for SPI.
				I/O	**CEX4 —** Capture/compare external I/O for PCA Module 4.
P2.0 to P2.7				I/O with internal pull-up	**Port 2**: Port 2 is an 8-bit bidirectional I/O port with internal pull-ups. Port 2 pins are pulled HIGH by the internal pull-ups when '1's are written to them and can be used as inputs in this state. As inputs, Port 2 pins that are externally pulled LOW will source current (I_{IL}) because of the internal pull-ups. Port 2 sends the high-order address byte during fetches from external program memory and during accesses to external Data Memory that use 16-bit address (MOVX@DPTR). In this application, it uses strong internal pull-ups when transitioning to '1's. Port 2 also receives some control signals and a partial of high-order address bits during the external host mode programming and verification.
P2.0/A8	21	18	24	I/O	**P2.0 —** Port 2 bit 0.
				O	**A8 —** Address bit 8.
P2.1/A9	22	19	25	I/O	**P2.1 —** Port 2 bit 1.
				O	**A9 —** Address bit 9.
P2.2/A10	23	20	26	I/O	**P2.2 —** Port 2 bit 2.
				O	**A10 —** Address bit 10.
P2.3/A11	24	21	27	I/O	**P2.3 —** Port 2 bit 3.
				O	**A11 —** Address bit 11.
P2.4/A12	25	22	28	I/O	**P2.4 —** Port 2 bit 4.
				O	**A12 —** Address bit 12.

© NXP B.V. 2009. All rights reserved.

Downloaded from Arrow.com.

Table 3. P89V51RB2/RC2/RD2 pin description *...continued*

Symbol	Pin			Type	Description
	DIP40	TQFP44	PLCC44		
P2.5/A13	26	23	29	I/O	**P2.5 —** Port 2 bit 5.
				O	**A13 —** Address bit 13.
P2.6/A14	27	24	30	I/O	**P2.6 —** Port 2 bit 6.
				O	**A14 —** Address bit 14.
P2.7/A15	28	25	31	I/O	**P2.7 —** Port 2 bit 7.
				O	**A15 —** Address bit 15.
P3.0 to P3.7				I/O with internal pull-up	**Port 3**: Port 3 is an 8-bit bidirectional I/O port with internal pull-ups. Port 3 pins are pulled HIGH by the internal pull-ups when '1's are written to them and can be used as inputs in this state. As inputs, Port 3 pins that are externally pulled LOW will source current (I_{IL}) because of the internal pull-ups. Port 3 also receives some control signals and a partial of high-order address bits during the external host mode programming and verification.
P3.0/RXD	10	5	11	I	**P3.0 —** Port 3 bit 0.
				I	**RXD —** Serial input port.
P3.1/TXD	11	7	13	O	**P3.1 —** Port 3 bit 1.
				O	**TXD —** Serial output port.
P3.2/$\overline{\text{INT0}}$	12	8	14	I	**P3.2 —** Port 3 bit 2.
				I	**$\overline{\text{INT0}}$ —** External interrupt 0 input.
P3.3/$\overline{\text{INT1}}$	13	9	15	I	**P3.3 —** Port 3 bit 3.
				I	**$\overline{\text{INT1}}$ —** External interrupt 1 input.
P3.4/T0	14	10	16	I/O	**P3.4 —** Port 3 bit 4.
				I	**T0 —** External count input to Timer/counter 0.
P3.5/T1	15	11	17	I/O	**P3.5 —** Port 3 bit 5.
				I	**T1 —** External count input to Timer/counter 1.
P3.6/$\overline{\text{WR}}$	16	12	18	O	**P3.6 —** Port 3 bit 6.
				O	**$\overline{\text{WR}}$ —** External data memory write strobe.
P3.7/$\overline{\text{RD}}$	17	13	19	O	**P3.7 —** Port 3 bit 7.
				O	**$\overline{\text{RD}}$ —** External data memory read strobe.
$\overline{\text{PSEN}}$	29	26	32	I/O	**Program Store Enable**: $\overline{\text{PSEN}}$ is the read strobe for external program memory. When the device is executing from internal program memory, $\overline{\text{PSEN}}$ is inactive (HIGH). When the device is executing code from external program memory, $\overline{\text{PSEN}}$ is activated twice each machine cycle, except that two $\overline{\text{PSEN}}$ activations are skipped during each access to external data memory. A forced HIGH-to-LOW input transition on the $\overline{\text{PSEN}}$ pin while the RST input is continually held HIGH for more than 10 machine cycles will cause the device to enter external host mode programming.

© NXP B.V. 2009. All rights reserved.

Downloaded from Arrow.com.

Table 3. P89V51RB2/RC2/RD2 pin description *...continued*

Symbol	Pin			Type	Description
	DIP40	TQFP44	PLCC44		
RST	9	4	10	I	**Reset**: While the oscillator is running, a HIGH logic state on this pin for two machine cycles will reset the device. If the $\overline{PSEN}$ pin is driven by a HIGH-to-LOW input transition while the RST input pin is held HIGH, the device will enter the external host mode, otherwise the device will enter the normal operation mode.
$\overline{EA}$	31	29	35	I	**External Access Enable**: $\overline{EA}$ must be connected to V_{SS} in order to enable the device to fetch code from the external program memory. $\overline{EA}$ must be strapped to V_{DD} for internal program execution. The $\overline{EA}$ pin can tolerate a high voltage of 12 V.
ALE/$\overline{PROG}$	30	27	33	I/O	**Address Latch Enable:** ALE is the output signal for latching the low byte of the address during an access to external memory. This pin is also the programming pulse input ($\overline{PROG}$) for flash programming. Normally the ALE[1] is emitted at a constant rate of $1/6$ the crystal frequency[2] and can be used for external timing and clocking. One ALE pulse is skipped during each access to external data memory. However, if AO is set to '1', ALE is disabled.
n.c.	-	6, 17, 28, 39	1, 12, 23, 34	I/O	not connected
XTAL1	19	15	21	I	**Crystal 1**: Input to the inverting oscillator amplifier and input to the internal clock generator circuits.
XTAL2	18	14	20	O	**Crystal 2:** Output from the inverting oscillator amplifier.
V_{DD}	40	38	44	I	**Power supply**
V_{SS}	20	16	22	I	**Ground**

[1] ALE loading issue: When ALE pin experiences higher loading (>30 pF) during the reset, the microcontroller may accidentally enter into modes other than normal working mode. The solution is to add a pull-up resistor of 3 kΩ to 50 kΩ to V_{DD}, e.g., for ALE pin.

[2] For 6-clock mode, ALE is emitted at $1/3$ of crystal frequency.

© NXP B.V. 2009. All rights reserved.

Downloaded from Arrow.com.

6. Functional description

6.1 Special function registers

Remark: SFR accesses are restricted in the following ways:

- User must **not** attempt to access any SFR locations not defined.
- Accesses to any defined SFR locations must be strictly for the functions for the SFRs.
- SFR bits labeled '-', '0' or '1' can **only** be written and read as follows:
  - '-' Unless otherwise specified, **must** be written with '0', but can return any value when read (even if it was written with '0'). It is a reserved bit and may be used in future derivatives.
  - '0' **must** be written with '0', and will return a '0' when read.
  - '1' **must** be written with '1', and will return a '1' when read.

© NXP B.V. 2009. All rights reserved.

Downloaded from Arrow.com.

Table 4. Special function registers

** indicates SFRs that are bit addressable*

Name	Description	SFR address	Bit functions and addresses							
			MSB							LSB
		Bit address	E7	E6	E5	E4	E3	E2	E1	E0
ACC*	Accumulator	E0H								
AUXR	Auxiliary function register	8EH	-	-	-	-	-	-	EXTRAM	AO
AUXR1	Auxiliary function register 1	A2H	-	-	-		GF2	0	-	DPS
		Bit address	F7	F6	F5	F4	F3	F2	F1	F0
B*	B register	F0H								
CCAP0H	Module 0 Capture HIGH	FAH								
CCAP1H	Module 1 Capture HIGH	FBH								
CCAP2H	Module 2 Capture HIGH	FCH								
CCAP3H	Module 3 Capture HIGH	FDH								
CCAP4H	Module 4 Capture HIGH	FEH								
CCAP0L	Module 0 Capture LOW	EAH								
CCAP1L	Module 1 Capture LOW	EBH								
CCAP2L	Module 2 Capture LOW	ECH								
CCAP3L	Module 3 Capture LOW	EDH								
CCAP4L	Module 4 Capture LOW	EEH								
CCAPM0	Module 0 Mode	DAH	-	ECOM_0	CAPP_0	CAPN_0	MAT_0	TOG_0	PWM_0	ECCF_0
CCAPM1	Module 1 Mode	DBH	-	ECOM_1	CAPP_1	CAPN_1	MAT_1	TOG_1	PWM_1	ECCF_1
CCAPM2	Module 2 Mode	DCH	-	ECOM_2	CAPP_2	CAPN_2	MAT_2	TOG_2	PWM_2	ECCF_2
CCAPM3	Module 3 Mode	DDH	-	ECOM_3	CAPP_3	CAPN_3	MAT_3	TOG_3	PWM_3	ECCF_3
CCAPM4	Module 4 Mode	DEH	-	ECOM_4	CAPP_4	CAPN_4	MAT_4	TOG_4	PWM_4	ECCF_4
		Bit address	DF	DE	DD	DC	DB	DA	D9	D8
CCON*	PCA Counter Control	D8H	CF	CR	-	CCF4	CCF3	CCF2	CCF1	CCF0
CH	PCA Counter HIGH	F9H								
CL	PCA Counter LOW	E9H								
CMOD	PCA Counter Mode	D9H	CIDL	WDTE	-	-	-	CPS1	CPS0	ECF
DPTR	Data Pointer (2 B)									
DPH	Data Pointer HIGH	83H								
DPL	Data Pointer LOW	82H								

© NXP B.V. 2009. All rights reserved.

Downloaded from Arrow.com.

Table 4. Special function registers *...continued*

** indicates SFRs that are bit addressable*

Name	Description	SFR address	Bit functions and addresses							
			MSB							LSB
FST	Flash Status Register	B6	-	SB	-	-	EDC	-	-	-
		Bit address	**AF**	**AE**	**AD**	**AC**	**AB**	**AA**	**A9**	**A8**
IEN0*	Interrupt Enable 0	A8H	EA	EC	ET2	ES0	ET1	EX1	ET0	EX0
		Bit address	**EF**	**EE**	**ED**	**EC**	**EB**	**EA**	**E9**	**E8**
IEN1*	Interrupt Enable 1	E8H	-	-	-	-	EBO			
		Bit address	**BF**	**BE**	**BD**	**BC**	**BB**	**BA**	**B9**	**B8**
IP0*	Interrupt Priority	B8H	-	PPC	PT2	PS	PT1	PX1	PT0	PX0
IP0H	Interrupt Priority 0 HIGH	B7H	-	PPCH	PT2H	PSH	PT1H	PX1H	PT0H	PX0H
		Bit address	**FF**	**FE**	**FD**	**FC**	**FB**	**FA**	**F9**	**F8**
IP1*	Interrupt Priority 1	F8H	-	-	-	-	PBO			
IP1H	Interrupt Priority 1 HIGH	F7H	-	-	-	-	PBOH			
FCF		B1H	-	-	-	-	-	-	SWR	BSEL
		Bit address	**87**	**86**	**85**	**84**	**83**	**82**	**81**	**80**
P0*	Port 0	80H	AD7	AD6	AD5	AD4	AD3	AD2	AD1	AD0
		Bit address	**97**	**96**	**95**	**94**	**93**	**92**	**91**	**90**
P1*	Port 1	90H	CEX4/ SPICLK	CEX3/ MISO	CEX2/ MOSI	CEX1/ $\overline{SS}$	CEX0	ECI	T2EX	T2
		Bit address	**A7**	**A6**	**A5**	**A4**	**A3**	**A2**	**A1**	**A0**
P2*	Port 2	A0H	A15	A14	A13	A12	A11	A10	A9	A8
		Bit address	**B7**	**B6**	**B5**	**B4**	**B3**	**B2**	**B1**	**B0**
P3*	Port 3	B0H	$\overline{RD}$	$\overline{WR}$	T1	T0	$\overline{INT1}$	$\overline{INT0}$	TXD	RXD
PCON	Power Control Register	87H	SMOD1	SMOD0	BOF	POF	GF1	GF0	PD	IDL
		Bit address	**D7**	**D6**	**D5**	**D4**	**D3**	**D2**	**D1**	**D0**
PSW*	Program Status Word	D0H	CY	AC	F0	RS1	RS0	OV	F1	P
RCAP2H	Timer2 Capture HIGH	CBH								
RCAP2L	Timer2 Capture LOW	CAH								
		Bit address	**9F**	**9E**	**9D**	**9C**	**9B**	**9A**	**99**	**98**
SCON*	Serial Port Control	98H	SM0/FE_	SM1	SM2	REN	TB8	RB8	TI	RI
SBUF	Serial Port Data Buffer Register	99H								

© NXP B.V. 2009. All rights reserved.

Downloaded from Arrow.com.

Table 4. Special function registers *...continued*

** indicates SFRs that are bit addressable*

Name	Description	SFR address	Bit functions and addresses							
			MSB							LSB
SADDR	Serial Port Address Register	A9H								
SADEN	Serial Port Address Enable	B9H								
		Bit address	**87[1]**	**86[1]**	**85[1]**	**84[1]**	**83[1]**	**82[1]**	**81[1]**	**80[1]**
SPCTL	SPI Control Register	D5H	SPIE	SPEN	DORD	MSTR	CPOL	CPHA	SPR1	SPR0
SPCFG	SPI Configuration Register	AAH	SPIF	SPWCOL	-	-	-	-	-	-
SPDAT	SPI Data	86H								
SP	Stack Pointer	81H								
		Bit address	**8F**	**8E**	**8D**	**8C**	**8B**	**8A**	**89**	**88**
TCON*	Timer Control Register	88H	TF1	TR1	TF0	TR0	IE1	IT1	IE0	IT0
		Bit address	**CF**	**CE**	**CD**	**CC**	**CB**	**CA**	**C9**	**C8**
T2CON*	Timer2 Control Register	C8H	TF2	EXF2	RCLK	TCLK	EXEN2	TR2	C/T2	CP/RL2
T2MOD	Timer2 Mode Control	C9H	-	-	ENT2				T2OE	DCEN
TH0	Timer 0 HIGH	8CH								
TH1	Timer 1 HIGH	8DH								
TH2	Timer 2 HIGH	CDH								
TL0	Timer 0 LOW	8AH								
TL1	Timer 1 LOW	8BH								
TL2	Timer 2 LOW	CCH								
TMOD	Timer 0 and 1 Mode	89H	GATE	C/T	M1	M0	GATE	C/T	M1	M0
WDTC	Watchdog Timer Control	C0H	-	-	-	WDOUT	WDRE	WDTS	WDT	SWDT
WDTD	Watchdog Timer Data/Reload	85H								

[1] Unimplemented bits in SFRs (labeled '-') are 'X's (unknown) at all times. Unless otherwise specified, '1's should not be written to these bits since they may be used for other purposes in future derivatives. The reset values shown for these bits are '0's although they are unknown when read.

© NXP B.V. 2009. All rights reserved.

Downloaded from Arrow.com.

6.2 Memory organization

The device has separate address spaces for program and data memory.

6.2.1 Flash program memory bank selection

There are two internal flash memory blocks in the device. Block 0 has 16/32/64 kB and is organized as 128/256/512 sectors, each sector consists of 128 B. Block 1 contains the IAP/ISP routines and may be enabled such that it overlays the first 8 kB of the user code memory. The overlay function is controlled by the combination of the Software Reset Bit (SWR) at FCF.1 and the Bank Select Bit (BSEL) at FCF.0. The combination of these bits and the memory source used for instructions is shown in Table 5.

Table 5. Code memory bank selection

SWR (FCF.1)	BSEL (FCF.0)	Addresses from 0000H to 1FFFH	Addresses above 1FFFH
0	0	boot code (in block 1)	user code (in block 0)
0	1	user code (in block 0)	
1	0		
1	1		

Access to the IAP routines in block 1 may be enabled by clearing the BSEL bit (FCF.0), provided that the SWR bit (FCF.1) is cleared. Following a power-on sequence, the boot code is automatically executed and attempts to autobaud to a host. If no autobaud occurs within approximately 400 ms and the SoftICE flag is not set, control will be passed to the user code. A software reset is used to accomplish this control transfer and as a result the SWR bit will remain set. **Therefore the user's code will need to clear the SWR bit in order to access the IAP routines in block 1.** However, caution must be taken when dynamically changing the BSEL bit. Since this will cause different physical memory to be mapped to the logical program address space, the user must avoid clearing the BSEL bit when executing user code within the address range 0000H to 1FFFH.

6.2.2 Power-on reset code execution

At initial power up, the port pins will be in a random state until the oscillator has started and the internal reset algorithm has weakly pulled all pins high. Powering up the device without a valid reset could cause the MCU to start executing instructions from an indeterminate location. Such undefined states may inadvertently corrupt the code in the flash. A system reset will not affect the 1 kB of on-chip RAM while the device is running, however, the contents of the on-chip RAM during power up are indeterminate.

When power is applied to the device, the RST pin must be held high long enough for the oscillator to start up (usually several milliseconds for a low frequency crystal), in addition to two machine cycles for a valid power-on reset. An example of a method to extend the RST signal is to implement a RC circuit by connecting the RST pin to V_{DD} through a 10 µF capacitor and to V_{SS} through an 8.2 kΩ resistor as shown in Figure 5. Note that if an RC circuit is being used, provisions should be made to ensure the V_{DD} rise time does not exceed 1 ms and the oscillator start-up time does not exceed 10 ms.

For a low frequency oscillator with slow start-up time the reset signal must be extended in order to account for the slow start-up time. This method maintains the necessary relationship between V_{DD} and RST to avoid programming at an indeterminate location, which may cause corruption in the code of the flash. The power-on detection is designed

© NXP B.V. 2009. All rights reserved.

Downloaded from Arrow.com.

to work during initial power up, before the voltage reaches the brownout detection level. The POF flag in the PCON register is set to indicate an initial power up condition. The POF flag will remain active until cleared by software.

Following a power-on or external reset the P89V51RB2/RC2/RD2 will force the SWR and BSEL bits (FCF[1:0]) = 00. This causes the boot block to be mapped into the lower 8 kB of code memory and the device will execute the ISP code in the boot block and attempt to autobaud to the host. If the autobaud is successful the device will remain in ISP mode. If, after approximately 400 ms, the autobaud is unsuccessful the boot block code will check to see if the SoftICE flag is set (from a previous programming operation). If the SoftICE flag is set the device will enter SoftICE mode. If the SoftICE flag is cleared, the boot code will execute a software reset causing the device to execute the user code from block 0 starting at address 0000H. Note that an external reset applied to the RST pin has the same effect as a power-on reset.

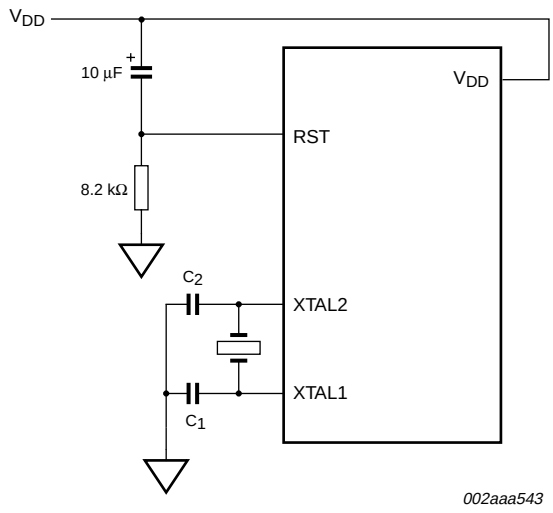

Fig 5. Power-on reset circuit

6.2.3 Software reset

A software reset is executed by changing the SWR bit (FCF.1) from ‘0’ to ‘1’. A software reset will reset the program counter to address 0000H and force both the SWR and BSEL bits (FCF[1:0]) = 10. This will result in the lower 8 kB of the user code memory being mapped into the user code memory space. Thus the user's code will be executed starting at address 0000H. A software reset will not change WDTC.2 or RAM data. Other SFRs will be set to their reset values.

6.2.4 Brownout detect reset

The device includes a brownout detection circuit to protect the system from severe supply voltage fluctuations. The P89V51RB2/RC2/RD2's brownout detection threshold is 2.35 V. When V_{DD} drops below this voltage threshold, the brownout detect triggers the circuit to generate a brownout interrupt but the CPU still runs until the supplied voltage returns to the brownout detection voltage V_{BOD}. The default operation for a brownout detection is to cause a processor reset.

© NXP B.V. 2009. All rights reserved.

Downloaded from Arrow.com.

V_{DD} must stay below V_{BOD} at least four oscillator clock periods before the brownout detection circuit will respond.

Brownout interrupt can be enabled by setting the EBO bit (IEA.3). If EBO bit is set and a brownout condition occurs, a brownout interrupt will be generated to execute the program at location 004BH. It is required that the EBO bit be cleared by software after the brownout interrupt is serviced. Clearing EBO bit when the brownout condition is active will properly reset the device. If brownout interrupt is not enabled, a brownout condition will reset the program to resume execution at location 0000H. A brownout detect reset will clear the BSEL bit (FCF.0) but will not change the SWR bit (FCF.1) and therefore will not change the banking of the lower 8 kB of user code memory space.

6.2.5 Watchdog reset

Like a brownout detect reset, the watchdog timer reset will clear the BSEL bit (FCF.0) but will not change the SWR bit (FCF.1) and therefore will not change the banking of the lower 8 kB of user code memory space.

The state of the SWR and BSEL bits after different types of resets is shown in Table 6. This results in the code memory bank selections as shown.

Table 6. Effects of reset sources on bank selection

Reset source	SWR bit result (FCF.1)	BSEL bit result (FCF.0)	Addresses from 0000H to 1FFFH	Addresses above 1FFFH
External reset	0	0	Boot code (in block 1)	User code (in block 0)
Power-on reset				
Watchdog reset	x	0	Retains state of SWR bit. If SWR, BSEL = 00 then uses boot code. If SWR, BSEL = 10 then uses user code.	
Brownout detect reset				
Software reset	1	0	User code (in block 0)	

6.2.6 Data RAM memory

The data RAM has 1024 B of internal memory. The device can also address up to 64 kB for external data memory.

6.2.7 Expanded data RAM addressing

The P89V51RB2/RC2/RD2 has 1 kB of RAM. See Figure 6 “Internal and external data memory structure” on page 19.

The device has four sections of internal data memory:

1. The lower 128 B of RAM (00H to 7FH) are directly and indirectly addressable.
2. The higher 128 B of RAM (80H to FFH) are indirectly addressable.
3. The special function registers (80H to FFH) are directly addressable only.
4. The expanded RAM of 768 B (00H to 2FFH) is indirectly addressable by the move external instruction (MOVX) and clearing the EXTRAM bit (see ‘Auxiliary function Register’ (AUXR) in Table 4 “Special function registers” on page 11).

Since the upper 128 B occupy the same addresses as the SFRs, the RAM must be accessed indirectly. The RAM and SFRs space are physically separate even though they have the same addresses.

© NXP B.V. 2009. All rights reserved.

Downloaded from Arrow.com.

Table 7. AUXR - Auxiliary register (address 8EH) bit allocation

Not bit addressable; Reset value 00H

Bit	7	6	5	4	3	2	1	0
Symbol	-	-	-	-	-	-	EXTRAM	AO

Table 8. AUXR - Auxiliary register (address 8EH) bit description

Bit	Symbol	Description
7 to 2	-	Reserved for future use. Should be set to ‘0’ by user programs.
1	EXTRAM	Internal/External RAM access using MOVX @Ri/@DPTR. When ‘0’, core attempts to access internal XRAM with address specified in MOVX instruction. If address supplied with this instruction exceeds on-chip available XRAM, off-chip XRAM is going to be selected and accessed. When ‘1’, every MOVX @Ri/@DPTR instruction targets external data memory by default.
0	AO	ALE off: disables/enables ALE. AO = 0 results in ALE emitted at a constant rate of ½ the oscillator frequency. In case of AO = 1, ALE is active only during a MOVX or MOVC.

When instructions access addresses in the upper 128 B (above 7FH), the MCU determines whether to access the SFRs or RAM by the type of instruction given. If it is indirect, then RAM is accessed. If it is direct, then an SFR is accessed. See the examples below.

Indirect Access:

MOV@R0, #data; R0 contains 90H

Register R0 points to 90H which is located in the upper address range. Data in ‘#data’ is written to RAM location 90H rather than port 1.

Direct Access:

MOV90H, #data; write data to P1

Data in ‘#data’ is written to port 1. Instructions that write directly to the address write to the SFRs.

To access the expanded RAM, the EXTRAM bit must be cleared and MOVX instructions must be used. The extra 768 B of memory is physically located on the chip and logically occupies the first 768 B of external memory (addresses 000H to 2FFH).

When EXTRAM = 0, the expanded RAM is indirectly addressed using the MOVX instruction in combination with any of the registers R0, R1 of the selected bank or DPTR. Accessing the expanded RAM does not affect ports P0, P3.6 ($\overline{WR}$), P3.7 ($\overline{RD}$), or P2. With EXTRAM = 0, the expanded RAM can be accessed as in the following example.

Expanded RAM Access (Indirect Addressing only):

MOVX@DPTR, A DPTR contains 0A0H

© NXP B.V. 2009. All rights reserved.

Downloaded from Arrow.com.

DPTR points to 0A0H and data in ‘A’ is written to address 0A0H of the expanded RAM rather than external memory. Access to external memory higher than 2FFH using the MOVX instruction will access external memory (0300H to FFFFH) and will perform in the same way as the standard 8051, with P0 and P2 as data/address bus, and P3.6 and P3.7 as write and read timing signals.

When EXTRAM = 1, MOVX @Ri and MOVX @DPTR will be similar to the standard 8051. Using MOVX @Ri provides an 8-bit address with multiplexed data on Port 0. Other output port pins can be used to output higher order address bits. This provides external paging capabilities. Using MOVX @DPTR generates a 16-bit address. This allows external addressing up the 64 kB. Port 2 provides the high-order eight address bits (DPH), and Port 0 multiplexes the low order eight address bits (DPL) with data. Both MOVX @Ri and MOVX @DPTR generates the necessary read and write signals (P3.6 - $\overline{WR}$ and P3.7 - $\overline{RD}$) for external memory use. Table 9 shows external data memory $\overline{RD}$, $\overline{WR}$ operation with EXTRAM bit.

The stack pointer (SP) can be located anywhere within the 256 B of internal RAM (lower 128 B and upper 128 B). The stack pointer may not be located in any part of the expanded RAM.

Table 9. External data memory $\overline{RD}$, $\overline{WR}$ with EXTRAM bit[1]

AUXR	MOVX @DPTR, A or MOVX A, @DPTR		MOVX @Ri, A or MOVX A, @Ri
	ADDR < 0300H	ADDR ≥ 0300H	ADDR = any
EXTRAM = 0	$\overline{RD}$/$\overline{WR}$ not asserted	$\overline{RD}$/$\overline{WR}$ asserted	$\overline{RD}$/$\overline{WR}$ not asserted
EXTRAM = 1	$\overline{RD}$/$\overline{WR}$ asserted	$\overline{RD}$/$\overline{WR}$ asserted	$\overline{RD}$/$\overline{WR}$ asserted

[1] Access limited to ERAM address within OSPI to 0FFH; cannot access 100H to 02FFH.

© NXP B.V. 2009. All rights reserved.

Downloaded from Arrow.com.

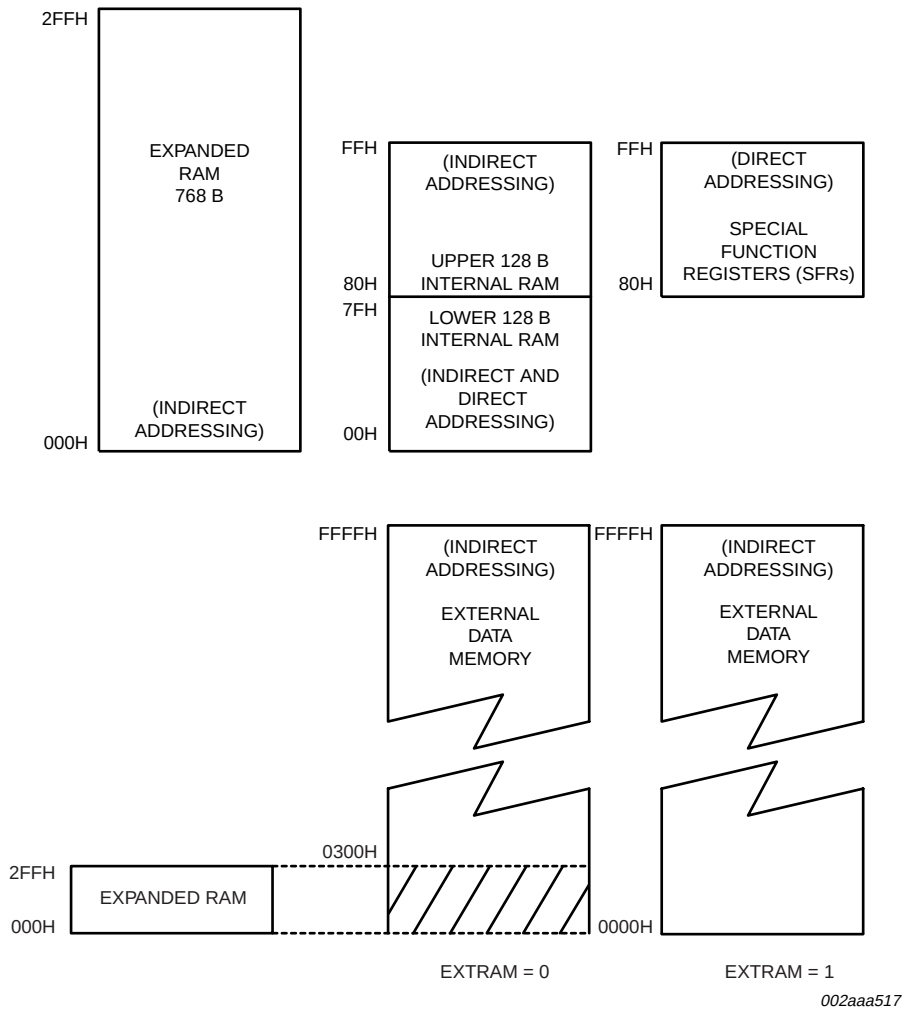

Fig 6. Internal and external data memory structure

6.2.8 Dual data pointers

The device has two 16-bit data pointers. The DPTR Select (DPS) bit in AUXR1 determines which of the two data pointers is accessed. When DPS = 0, DPTR0 is selected; when DPS = 1, DPTR1 is selected. Quickly switching between the two data pointers can be accomplished by a single INC instruction on AUXR1 (see Figure 7).

© NXP B.V. 2009. All rights reserved.

Downloaded from Arrow.com.

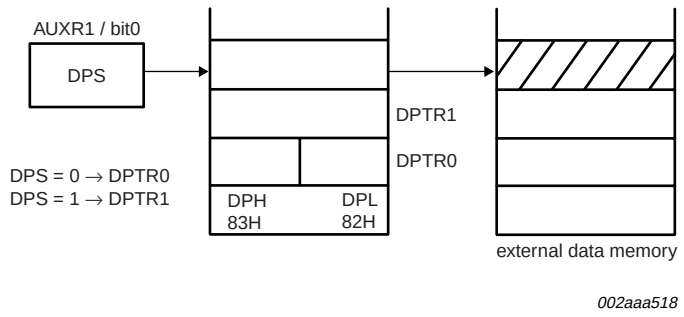

Fig 7. Dual data pointer organization

Table 10. AUXR1 - Auxiliary register 1 (address A2H) bit allocation

Not bit addressable; Reset value 00H

Bit	7	6	5	4	3	2	1	0
Symbol	-	-	-	-	GF2	0	-	DPS

Table 11. AUXR1 - Auxiliary register 1 (address A2H) bit description

Bit	Symbol	Description
7 to 4	-	Reserved for future use. Should be set to ‘0’ by user programs.
3	GF2	General purpose user-defined flag.
2	0	This bit contains a hard-wired ‘0’. Allows toggling of the DPS bit by incrementing AUXR1, without interfering with other bits in the register.
1	-	Reserved for future use. Should be set to ‘0’ by user programs.
0	DPS	Data pointer select. Chooses one of two Data Pointers for use by the program. See text for details.

6.3 Flash memory IAP

6.3.1 Flash organization

The P89V51RB2/RC2/RD2 program memory consists of a 16/32/64 kB block. ISP capability, in a second 8 kB block, is provided to allow the user code to be programmed in-circuit through the serial port. There are three methods of erasing or programming of the flash memory that may be used. First, the flash may be programmed or erased in the end-user application by calling low-level routines through a common entry point (IAP). Second, the on-chip ISP bootloader may be invoked. This ISP bootloader will, in turn, call low-level routines through the same common entry point that can be used by the end-user application. Third, the flash may be programmed or erased using the parallel method by using a commercially available EPROM programmer which supports this device.

6.3.2 Boot block (block 1)

When the microcontroller programs its own flash memory, all of the low level details are handled by code that is contained in block 1. A user program calls the common entry point in the block 1 with appropriate parameters to accomplish the desired operation. Boot block operations include erase user code, program user code, program security bits, etc.

© NXP B.V. 2009. All rights reserved.

Downloaded from Arrow.com.

A chip-erase operation can be performed using a commercially available parallel programer. This operation will erase the contents of this boot block and it will be necessary for the user to reprogram this boot block (block 1) with the NXP-provided ISP/IAP code in order to use the ISP or IAP capabilities of this device. Go to http://www.nxp.com/support for questions or to obtain the hex file for this device.

6.3.3 ISP

ISP is performed without removing the microcontroller from the system. The ISP facility consists of a series of internal hardware resources coupled with internal firmware to facilitate remote programming of the P89V51RB2/RC2/RD2 through the serial port. This firmware is provided by NXP and embedded within each P89V51RB2/RC2/RD2 device. The NXP ISP facility has made in-circuit programming in an embedded application possible with a minimum of additional expense in components and circuit board area. The ISP function uses five pins (V_{DD}, V_{SS}, TXD, RXD, and RST). Only a small connector needs to be available to interface your application to an external circuit in order to use this feature.

6.3.4 Using ISP

The ISP feature allows for a wide range of baud rates to be used in your application, independent of the oscillator frequency. It is also adaptable to a wide range of oscillator frequencies. This is accomplished by measuring the bit-time of a single bit in a received character. This information is then used to program the baud rate in terms of timer counts based on the oscillator frequency. The ISP feature requires that an initial character (an uppercase U) be sent to the P89V51RB2/RC2/RD2 to establish the baud rate. The ISP firmware provides auto-echo of received characters. Once baud rate initialization has been performed, the ISP firmware will only accept Intel Hex-type records. Intel Hex records consist of ASCII characters used to represent hexadecimal values and are summarized below:

:NNAAAARRDD..DDCC<crlf>

In the Intel Hex record, the ‘NN’ represents the number of data bytes in the record. The P89V51RB2/RC2/RD2 will accept up to 32 data bytes. The ‘AAAA’ string represents the address of the first byte in the record. If there are zero bytes in the record, this field is often set to 0000. The ‘RR’ string indicates the record type. A record type of ‘00’ is a data record. A record type of ‘01’ indicates the end-of-file mark. In this application, additional record types will be added to indicate either commands or data for the ISP facility.

The maximum number of data bytes in a record is limited to 32 (decimal). ISP commands are summarized in Table 12. As a record is received by the P89V51RB2/RC2/RD2, the information in the record is stored internally and a checksum calculation is performed. The operation indicated by the record type is not performed until the entire record has been received. Should an error occur in the checksum, the P89V51RB2/RC2/RD2 will send an ‘X’ out the serial port indicating a checksum error. If the checksum calculation is found to match the checksum in the record, then the command will be executed. In most cases, successful reception of the record will be indicated by transmitting a ‘.’ character out the serial port.

© NXP B.V. 2009. All rights reserved.

Downloaded from Arrow.com.

Table 12. ISP hex record formats

Record type	Command/data function
00	Program User Code Memory :nnaaaa00dd..ddcc Where: nn = number of bytes to program aaaa = address dd..dd = data bytes cc = checksum Example: :10000000010203040500607080 9cc
01	End of File (EOF), no operation :xxxxxx01cc Where: xxxxxx = required field but value is a ‘don’t care’ cc = checksum Example: :00000001FF
02	Set SoftICE mode Following the next reset the device will enter the SoftICE mode. Will erase user code memory, erase device serial number. :00000002cc Where: xxxxxx = required field but value is a ‘don’t care’ cc = checksum Example: :00000002FE

© NXP B.V. 2009. All rights reserved.

Downloaded from Arrow.com.

Table 12. ISP hex record formats *…continued*

Record type	Command/data function
03	Miscellaneous Write Functions :nnxxxx03ffssddcc Where: nn = number of bytes in the record xxxx = required field but value is a 'don't care' ff = subfunction code ss = selection code dd = data (if needed) cc = checksum Subfunction code = 01 (Erase block 0) ff = 01 Subfunction code = 05 (Program security bit, Double Clock) ff = 05 ss = 01 program security bit ss = 05 program double clock bit Subfunction code = 08 (Erase sector, 128 B) ff = 08 ss = high byte of sector address (A15:8) dd = low byte of sector address (A7, A6:0 = 0) Example: :0300000308E000F2 (erase sector at E000H)
04	Display Device Data or Blank Check :05xxxx04ssssseeeeffcc Where 05 = number of bytes in the record xxxx = required field but value is a 'don't care' 04 = function code for display or blank check ssss = starting address, MSB first eeee = ending address, MSB first ff = subfunction 00 = display data 01 = blank check cc = checksum Subfunction codes: Example: :0500000400001FFF00D9 (display from 0000H to 1FFFH)

© NXP B.V. 2009. All rights reserved.

Downloaded from Arrow.com.

Table 12. ISP hex record formats *…continued*

Record type	Command/data function
05	Miscellaneous Read Functions :02xxxx05ffsscc Where: 02 = number of bytes in the record xxxx = required field but value is a 'don't care' 05 = function code for misc read ffss = subfunction and selection code 0000 = read manufacturer id 0001 = read device id 1 0002 = read boot code version 0700 = read security bit (00 SoftICE serial number match 0 SB 0 Double Clock) cc = checksum Example: :020000050000F9 (display manufacturer id)
06	Direct Load of Baud Rate :02xxxx06HHLLcc Where: 02 = number of bytes in the record xxxx = required field but value is a 'don't care' HH = high byte of timer LL = low byte of timer cc = checksum Example: :02000006FFFFcc (load T2 = FFFF)
07	Reset serial number, erase user code, clear SoftICE mode :xxxxxx07cc Where: xxxxxx = required field but value is a 'don't care' 07 = reset serial number function cc = checksum Example: :00000007F9
08	Verify serial number :nnxxxx08ss..sscc Where: xxxxxx = required field but value is a 'don't care' 08 = verify serial number function ss..ss = serial number contents cc = checksum Example: :03000008010203EF (verify s/n = 010203)

© NXP B.V. 2009. All rights reserved.

Downloaded from Arrow.com.

Table 12. ISP hex record formats *...continued*

Record type	Command/data function
09	Write serial number :nnxxxx09ss..sscc Where: xxxxxx = required field but value is a 'don't care' 09 = write serial number function ss..ss = serial number contents cc = checksum Example: :03000009010203EE (write s/n = 010203)
0A	Display serial number :xxxxxx0Acc Where: xxxxxx = required field but value is a 'don't care' 0A = display serial number function cc = checksum Example: :0000000AF6
0B	Reset and run user code :xxxxxx0Bcc Where: xxxxxx = required field but value is a 'don't care' 0B = Reset and run user code cc = checksum Example: :0000000BF5

6.3.5 Using the serial number

This device has the option of storing a 31 B serial number along with the length of the serial number (for a total of 32 B) in a non-volatile memory space. When ISP mode is entered, the serial number length is evaluated to determine if the serial number is in use. If the length of the serial number is programmed to either 00H or FFH, the serial number is considered not in use. If the serial number is in use, reading, programming, or erasing of the user code memory or the serial number is blocked until the user transmits a 'verify serial number' record containing a serial number and length that matches the serial number and length previously stored in the device. The user can reset the serial number to all zeros and set the length to zero by sending the 'reset serial number' record. In addition, the 'reset serial number' record will also erase all user code.

6.3.6 IAP method

Several IAP calls are available for use by an application program to permit selective erasing, reading and programming of flash sectors, security bit, configuration bytes, and device id. All calls are made through a common interface, PGM_MTP. The programming functions are selected by setting up the microcontroller's registers before making a call to PGM_MTP at 1FF0H. The IAP calls are shown in Table 13.

© NXP B.V. 2009. All rights reserved.

Downloaded from Arrow.com.

Table 13. IAP function calls

IAP function	IAP call parameters
Read ID	**Input parameters:** R1 = 00H DPH = 00H DPL = 00H = mfgr id DPL = 01H = device id 1 DPL = 02H = boot code version number **Return parameter(s):** ACC = requested parameter
Erase block 0	**Input parameters:** R1 = 01H **Return parameter(s):** ACC = 00 = pass ACC = !00 = fail
Program User Code	**Input parameters:** R1 = 02H DPH = memory address MSB DPL = memory address LSB ACC = byte to program **Return parameter(s):** ACC = 00 = pass ACC = !00 = fail
Read User Code	**Input parameters:** R1 = 03H DPH = memory address MSB DPL = memory address LSB **Return parameter(s):** ACC = device data

© NXP B.V. 2009. All rights reserved.

Downloaded from Arrow.com.

Table 13. IAP function calls *...continued*

IAP function	IAP call parameters
Program Security Bit, Double Clock	**Input parameters:** R1 = 05H DPL = 01H = security bit DPL = 05H = Double Clock **Return parameter(s):** ACC = 00 = pass ACC = !00 = fail
Read Security Bit, Double Clock, SoftICE	**Input parameters:** ACC = 07H **Return parameter(s):** ACC = 00 SoftICE S/N-match 0 SB 0 DBL_CLK
Erase sector	**Input parameters:** R1 = 08H DPH = sector address high byte DPL = sector address low byte **Return parameter(s):** ACC = 00 = pass ACC = !00 = fail

6.4 Timers/counters 0 and 1

The two 16-bit Timer/counter registers: Timer 0 and Timer 1 can be configured to operate either as timers or event counters (see Table 14 and Table 15).

In the 'Timer' function, the register is incremented every machine cycle. Thus, one can think of it as counting machine cycles. Since a machine cycle consists of six oscillator periods, the count rate is $1/6$ of the oscillator frequency.

In the 'Counter' function, the register is incremented in response to a 1-to-0 transition at its corresponding external input pin, T0 or T1. In this function, the external input is sampled once every machine cycle.

When the samples show a high in one cycle and a low in the next cycle, the count is incremented. The new count value appears in the register in the machine cycle following the one in which the transition was detected. Since it takes two machine cycles (12 oscillator periods) for 1-to-0 transition to be recognized, the maximum count rate is $1/12$ of the oscillator frequency. There are no restrictions on the duty cycle of the external input signal, but to ensure that a given level is sampled at least once before it changes, it should be held for at least one full machine cycle. In addition to the 'Timer' or 'Counter' selection, Timer 0 and Timer 1 have four operating modes from which to select.

The 'Timer' or 'Counter' function is selected by control bits C/T in the Special Function Register TMOD. These two Timer/counters have four operating modes, which are selected by bit-pairs (M1, M0) in TMOD. Modes 0, 1, and 2 are the same for both Timers/counters. Mode 3 is different. The four operating modes are described in the following text.

© NXP B.V. 2009. All rights reserved.

Downloaded from Arrow.com.

Table 14. TMOD - Timer/counter mode control register (address 89H) bit allocation

Not bit addressable; Reset value: 0000 0000B; Reset source(s): any source

Bit	7	6	5	4	3	2	1	0
Symbol	T1GATE	T1C/$\overline{T}$	T1M1	T1M0	T0GATE	T0C/$\overline{T}$	T0M1	T0M0

Table 15. TMOD - Timer/counter mode control register (address 89H) bit description

Bit	Symbol	Description
	T1/T0	Bits controlling Timer1/Timer0
	GATE	Gating control when set. Timer/counter 'x' is enabled only while 'INTx' pin is HIGH and 'TRx' control pin is set. When cleared, Timer 'x' is enabled whenever 'TRx' control bit is set.
	C/$\overline{T}$	Gating Timer or Counter Selector cleared for Timer operation (input from internal system clock.) Set for Counter operation (input from 'Tx' input pin).

Table 16. TMOD - Timer/counter mode control register (address 89H) M1/M0 operating mode

M1	M0	Operating mode	
0	0	0	8048 timer 'TLx' serves as 5-bit prescaler
0	1	1	16-bit Timer/counter 'THx' and 'TLx' are cascaded; there is no prescaler.
1	0	2	8-bit auto-reload Timer/counter 'THx' holds a value which is to be reloaded into 'TLx' each time it overflows.
1	1	3	(Timer 0) TL0 is an 8-bit Timer/counter controlled by the standard Timer 0 control bits. TH0 is an 8-bit timer only controlled by Timer 1 control bits.
1	1	3	(Timer 1) Timer/counter 1 stopped.

Table 17. TCON - Timer/counter control register (address 88H) bit allocation

Bit addressable; Reset value: 0000 0000B; Reset source(s): any reset

Bit	7	6	5	4	3	2	1	0
Symbol	TF1	TR1	TF0	TR0	IE1	IT1	IE0	IT0

Table 18. TCON - Timer/counter control register (address 88H) bit description

Bit	Symbol	Description
7	TF1	Timer 1 overflow flag. Set by hardware on Timer/counter overflow. Cleared by hardware when the processor vectors to Timer 1 Interrupt routine, or by software.
6	TR1	Timer 1 Run control bit. Set/cleared by software to turn Timer/counter 1 on/off.
5	TF0	Timer 0 overflow flag. Set by hardware on Timer/counter overflow. Cleared by hardware when the processor vectors to Timer 0 Interrupt routine, or by software.
4	TR0	Timer 0 Run control bit. Set/cleared by software to turn Timer/counter 0 on/off.
3	IE1	Interrupt 1 Edge flag. Set by hardware when external interrupt 1 edge/low level is detected. Cleared by hardware when the interrupt is processed, or by software.

© NXP B.V. 2009. All rights reserved.

Downloaded from Arrow.com.

Table 18. TCON - Timer/counter control register (address 88H) bit description *...continued*

Bit	Symbol	Description
2	IT1	Interrupt 1 Type control bit. Set/cleared by software to specify falling edge/low level that triggers external interrupt 1.
1	IE0	Interrupt 0 Edge flag. Set by hardware when external interrupt 0 edge/low level is detected. Cleared by hardware when the interrupt is processed, or by software.
0	IT0	Interrupt 0 Type control bit. Set/cleared by software to specify falling edge/low level that triggers external interrupt 0.

6.4.1 Mode 0

Putting either Timer into mode 0 makes it look like an 8048 Timer, which is an 8-bit Counter with a fixed divide-by-32 prescaler. Figure 8 shows mode 0 operation.

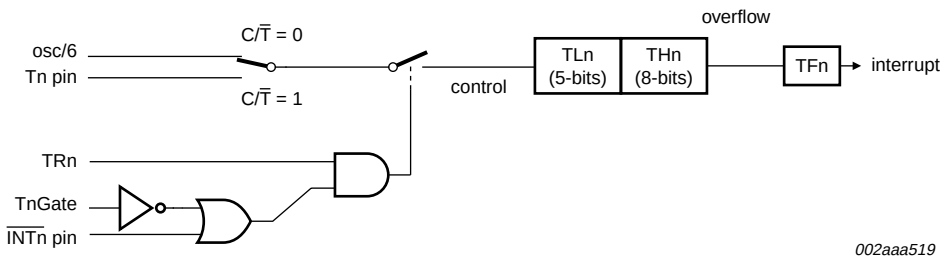

Fig 8. Timer/counter 0 or 1 in mode 0 (13-bit counter)

In this mode, the Timer register is configured as a 13-bit register. As the count rolls over from all 1s to all 0s, it sets the Timer interrupt flag TFn. The count input is enabled to the Timer when TRn = 1 and either GATE = 0 or $\overline{INT}$n = 1. (Setting GATE = 1 allows the Timer to be controlled by external input $\overline{INT}$n, to facilitate pulse width measurements). TRn is a control bit in the Special Function Register TCON (Figure 7). The GATE bit is in the TMOD register.

The 13-bit register consists of all 8 bits of THn and the lower 5 bits of TLn. The upper 3 bits of TLn are indeterminate and should be ignored. Setting the run flag (TRn) does not clear the registers.

Mode 0 operation is the same for Timer 0 and Timer 1 (see Figure 8). There are two different GATE bits, one for Timer 1 (TMOD.7) and one for Timer 0 (TMOD.3).

6.4.2 Mode 1

Mode 1 is the same as mode 0, except that all 16 bits of the timer register (THn and TLn) are used. See Figure 9.

© NXP B.V. 2009. All rights reserved.

Downloaded from Arrow.com.

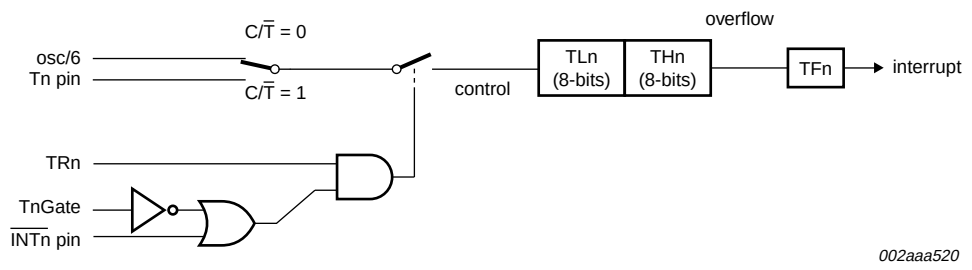

Fig 9. Timer/counter 0 or 1 in mode 1 (16-bit counter)

6.4.3 Mode 2

Mode 2 configures the Timer register as an 8-bit Counter (TLn) with automatic reload, as shown in Figure 10. Overflow from TLn not only sets TFn, but also reloads TLn with the contents of THn, which must be preset by software. The reload leaves THn unchanged. Mode 2 operation is the same for Timer 0 and Timer 1.

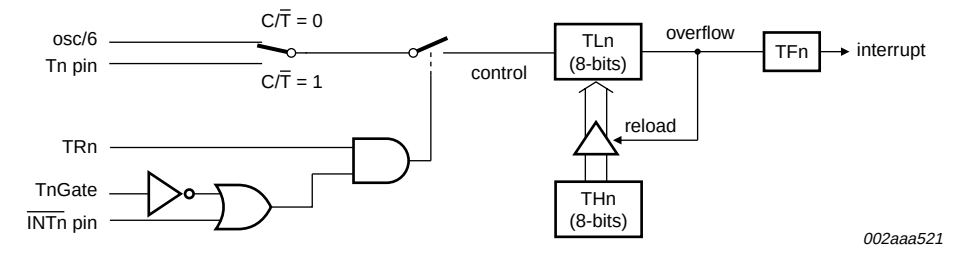

Fig 10. Timer/counter 0 or 1 in mode 2 (8-bit auto-reload)

6.4.4 Mode 3

When timer 1 is in mode 3 it is stopped (holds its count). The effect is the same as setting TR1 = 0.

Timer 0 in mode 3 establishes TL0 and TH0 as two separate 8-bit counters. The logic for mode 3 and Timer 0 is shown in Figure 11. TL0 uses the Timer 0 control bits: T0C/$\overline{T}$, T0GATE, TR0, $\overline{INT0}$, and TF0. TH0 is locked into a timer function (counting machine cycles) and takes over the use of TR1 and TF1 from Timer 1. Thus, TH0 now controls the 'Timer 1' interrupt.

Mode 3 is provided for applications that require an extra 8-bit timer. With Timer 0 in mode 3, the P89V51RB2/RC2/RD2 can look like it has an additional Timer.

Note: When Timer 0 is in mode 3, Timer 1 can be turned on and off by switching it into and out of its own mode 3. It can still be used by the serial port as a baud rate generator, or in any application not requiring an interrupt.

© NXP B.V. 2009. All rights reserved.

Downloaded from Arrow.com.

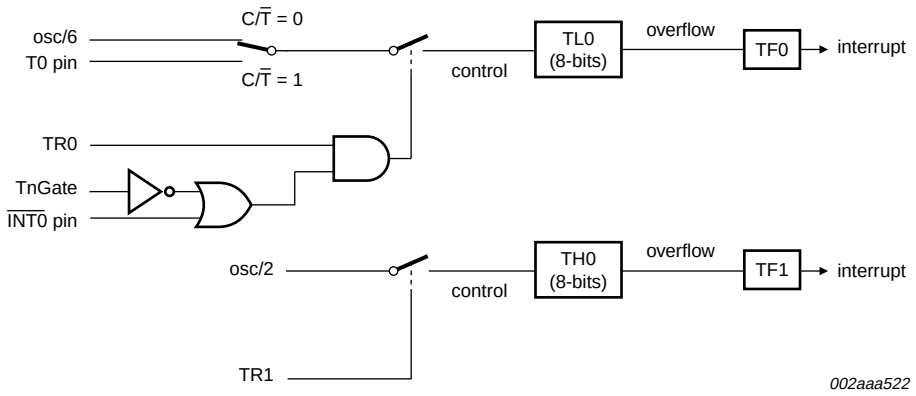

Fig 11. Timer/counter 0 mode 3 (two 8-bit counters)

6.5 Timer 2

Timer 2 is a 16-bit Timer/counter which can operate as either an event timer or an event counter, as selected by C/T2 in the special function register T2CON. Timer 2 has four operating modes: Capture, Auto-reload (up or down counting), Clock-out, and Baud Rate Generator which are selected according to Table 19 using T2CON (Table 20 and Table 21) and T2MOD (Table 22 and Table 23).

Table 19. Timer 2 operating mode

RCLK + TCLK	CP/$\overline{RL2}$	TR2	T2OE	Mode
0	0	1	0	16-bit auto reload
0	1	1	0	16-bit capture
0	0	1	1	programmable clock-out
1	X	1	0	baud rate generator
X	X	0	X	off

Table 20. T2CON - Timer/counter 2 control register (address C8H) bit allocation
Bit addressable; Reset value: 00H

Bit	7	6	5	4	3	2	1	0
Symbol	TF2	EXF2	RCLK	TCLK	EXEN2	TR2	C/$\overline{T2}$	CP/$\overline{RL2}$

Table 21. T2CON - Timer/counter 2 control register (address C8H) bit description

Bit	Symbol	Description
7	TF2	Timer 2 overflow flag set by a Timer 2 overflow and must be cleared by software. TF2 will not be set when either RCLK or TCLK = 1 or when Timer 2 is in Clock-out mode.
6	EXF2	Timer 2 external flag is set when Timer 2 is in capture, reload or baud-rate mode, EXEN2 = 1 and a negative transition on T2EX occurs. If Timer 2 interrupt is enabled EXF2 = 1 causes the CPU to vector to the Timer 2 interrupt routine. EXF2 must be cleared by software.
5	RCLK	Receive clock flag. When set, causes the UART to use Timer 2 overflow pulses for its receive clock in modes 1 and 3. RCLK = 0 causes Timer 1 overflow to be used for the receive clock.

© NXP B.V. 2009. All rights reserved.

Downloaded from Arrow.com.

Table 21. T2CON - Timer/counter 2 control register (address C8H) bit description *...continued*

Bit	Symbol	Description
4	TCLK	Transmit clock flag. When set, causes the UART to use Timer 2 overflow pulses for its transmit clock in modes 1 and 3. TCLK = 0 causes Timer 1 overflows to be used for the transmit clock.
3	EXEN2	Timer 2 external enable flag. When set, allows a capture or reload to occur as a result of a negative transition on T2EX if Timer 2 is not being used to clock the serial port. EXEN2 = 0 causes Timer 2 to ignore events at T2EX.
2	TR2	Start/stop control for Timer 2. A logic '1' enables the timer to run.
1	C/$\overline{T}$2	Timer or counter select. (Timer 2) 0 = internal timer (f_{osc} / 6) 1 = external event counter (falling edge triggered; external clock's maximum rate = f_{osc} / 12
0	CP/$\overline{RL}$2	Capture/Reload flag. When set, captures will occur on negative transitions at T2EX if EXEN2 = 1. When cleared, auto-reloads will occur either with Timer 2 overflows or negative transitions at T2EX when EXEN2 = 1. When either RCLK = 1 or TCLK = 1, this bit is ignored and the timer is forced to auto-reload on Timer 2 overflow.

Table 22. T2MOD - Timer 2 mode control register (address C9H) bit allocation

Not bit addressable; Reset value: XX00 0000B

Bit	7	6	5	4	3	2	1	0
Symbol	-	-	-	-	-	-	T2OE	DCEN

Table 23. T2MOD - Timer 2 mode control register (address C9H) bit description

Bit	Symbol	Description
7 to 2	-	Reserved for future use. Should be set to '0' by user programs.
1	T2OE	Timer 2 Output Enable bit. Used in programmable clock-out mode only.
0	DCEN	Down Count Enable bit. When set, this allows Timer 2 to be configured as an up/down counter.

6.5.1 Capture mode

In the Capture mode there are two options which are selected by bit EXEN2 in T2CON. If EXEN2 = 0 Timer 2 is a 16-bit timer or counter (as selected by C/$\overline{T}$2 in T2CON) which upon overflowing sets bit TF2, the Timer 2 overflow bit.

The capture mode is illustrated in Figure 12.

© NXP B.V. 2009. All rights reserved.

Downloaded from Arrow.com.

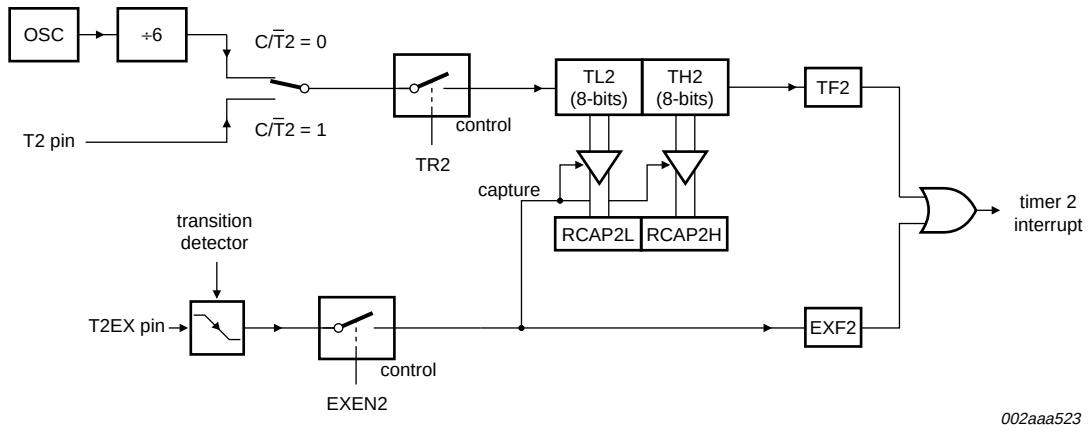

Fig 12. Timer 2 in Capture mode

This bit can be used to generate an interrupt (by enabling the Timer 2 interrupt bit in the IEN0 register). If EXEN2 = 1, Timer 2 operates as described above, but with the added feature that a 1-to-0 transition at external input T2EX causes the current value in the Timer 2 registers, TL2 and TH2, to be captured into registers RCAP2L and RCAP2H, respectively.

In addition, the transition at T2EX causes bit EXF2 in T2CON to be set, and EXF2 like TF2 can generate an interrupt (which vectors to the same location as Timer 2 overflow interrupt). The Timer 2 interrupt service routine can interrogate TF2 and EXF2 to determine which event caused the interrupt.

There is no reload value for TL2 and TH2 in this mode. Even when a capture event occurs from T2EX, the counter keeps on counting T2 pin transitions or f_{osc} / 6 pulses. Since once loaded contents of RCAP2L and RCAP2H registers are not protected, once Timer2 interrupt is signalled it has to be serviced before new capture event on T2EX pin occurs. Otherwise, the next falling edge on T2EX pin will initiate reload of the current value from TL2 and TH2 to RCAP2L and RCAP2H and consequently corrupt their content related to previously reported interrupt.

6.5.2 Auto-reload mode (up or down counter)

In the 16-bit auto-reload mode, Timer 2 can be configured as either a timer or counter (via C/$\overline{T}$2 in T2CON), then programmed to count up or down. The counting direction is determined by bit DCEN (Down Counter Enable) which is located in the T2MOD register (see Table 22 and Table 23). When reset is applied, DCEN = 0 and Timer 2 will default to counting up. If the DCEN bit is set, Timer 2 can count up or down depending on the value of the T2EX pin.

Figure 13 shows Timer 2 counting up automatically (DCEN = 0).

© NXP B.V. 2009. All rights reserved.

Downloaded from Arrow.com.

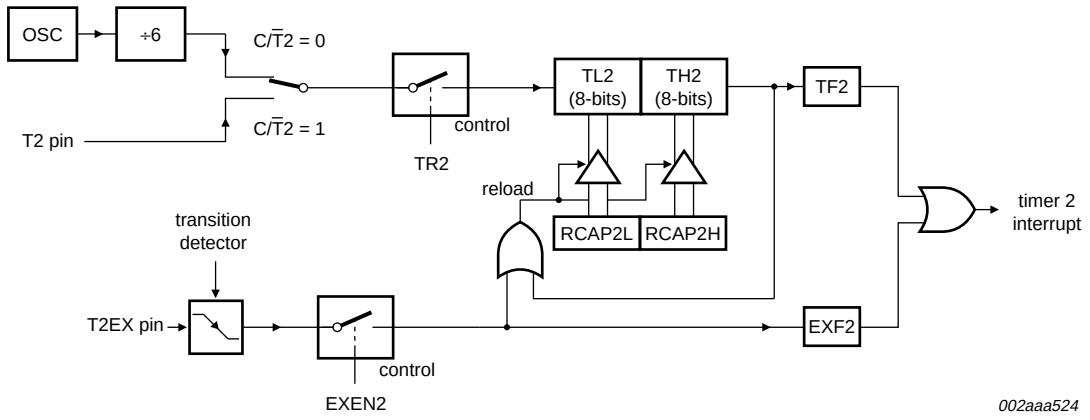

Fig 13. Timer 2 in auto-reload mode (DCEN = 0)

In this mode, there are two options selected by bit EXEN2 in T2CON register. If EXEN2 = 0, then Timer 2 counts up to 0FFFFH and sets the TF2 (Overflow Flag) bit upon overflow. This causes the Timer 2 registers to be reloaded with the 16-bit value in RCAP2L and RCAP2H. The values in RCAP2L and RCAP2H are preset by software means.

Auto reload frequency when Timer 2 is counting up can be determined from this formula:

$$\frac{SupplyFrequency}{(65536 \angle (RCAP2H, RCAP2L))} \quad (1)$$

Where SupplyFrequency is either f_{osc} ($C/\overline{T2} = 0$) or frequency of signal on T2 pin ($C/\overline{T2} = 1$).

If EXEN2 = 1, a 16-bit reload can be triggered either by an overflow or by a 1-to-0 transition at input T2EX. This transition also sets the EXF2 bit. The Timer 2 interrupt, if enabled, can be generated when either TF2 or EXF2 is ‘1’.

Microcontroller’s hardware will need three consecutive machine cycles in order to recognize falling edge on T2EX and set EXF2 = 1: in the first machine cycle pin T2EX has to be sampled as ‘1’; in the second machine cycle it has to be sampled as ‘0’, and in the third machine cycle EXF2 will be set to ‘1’.

In Figure 14, DCEN = 1 and Timer 2 is enabled to count up or down. This mode allows pin T2EX to control the direction of count. When a logic ‘1’ is applied at pin T2EX Timer 2 will count up. Timer 2 will overflow at 0FFFFH and set the TF2 flag, which can then generate an interrupt, if the interrupt is enabled. This timer overflow also causes the 16-bit value in RCAP2L and RCAP2H to be reloaded into the timer registers TL2 and TH2.

© NXP B.V. 2009. All rights reserved.

Downloaded from Arrow.com.

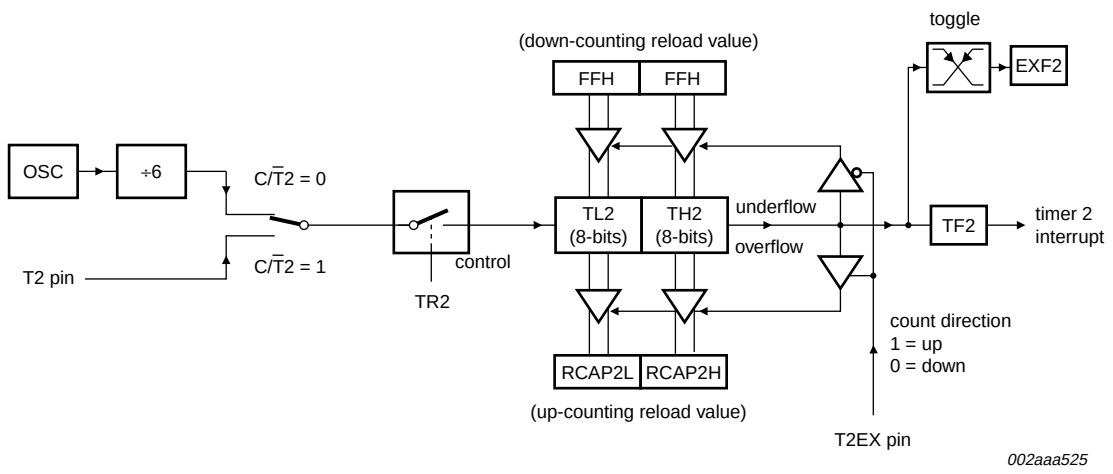

Fig 14. Timer 2 in Auto Reload mode (DCEN = 1)

When a logic 0 is applied at pin T2EX this causes Timer 2 to count down. The timer will underflow when TL2 and TH2 become equal to the value stored in RCAP2L and RCAP2H. Timer 2 underflow sets the TF2 flag and causes 0FFFFH to be reloaded into the timer registers TL2 and TH2. The external flag EXF2 toggles when Timer 2 underflows or overflows. This EXF2 bit can be used as a 17th bit of resolution if needed.

6.5.3 Programmable clock-out

A 50 % duty cycle clock can be programmed to come out on pin T2 (P1.0). This pin, besides being a regular I/O pin, has two additional functions. It can be programmed:

1. To input the external clock for Timer/counter 2, or
2. To output a 50 % duty cycle clock ranging from 122 Hz to 8 MHz at a 16 MHz operating frequency.

To configure the Timer/counter 2 as a clock generator, bit C/$\overline{T}$2 (in T2CON) must be cleared and bit T2OE in T2MOD must be set. Bit TR2 (T2CON.2) also must be set to start the timer.

The Clock-Out frequency depends on the oscillator frequency and the reload value of Timer 2 capture registers (RCAP2H, RCAP2L) as shown in Equation 2:

$$\frac{OscillatorFrequency}{2 \times (65536 \angle (RCAP2H, RCAP2L))} \quad (2)$$

Where (RCAP2H,RCAP2L) = the content of RCAP2H and RCAP2L taken as a 16-bit unsigned integer.

In the Clock-Out mode Timer 2 roll-overs will not generate an interrupt. This is similar to when it is used as a baud-rate generator.

6.5.4 Baud rate generator mode

Bits TCLK and/or RCLK in T2CON allow the UART) transmit and receive baud rates to be derived from either Timer 1 or Timer 2 (See Section 6.6 “UARTs” on page 37 for details). When TCLK = 0, Timer 1 is used as the UART transmit baud rate generator. When

© NXP B.V. 2009. All rights reserved.

Downloaded from Arrow.com.

TCLK = 1, Timer 2 is used as the UART transmit baud rate generator. RCLK has the same effect for the UART receive baud rate. With these two bits, the serial port can have different receive and transmit baud rates – Timer 1 or Timer 2.

Figure 15 shows Timer 2 in baud rate generator mode:

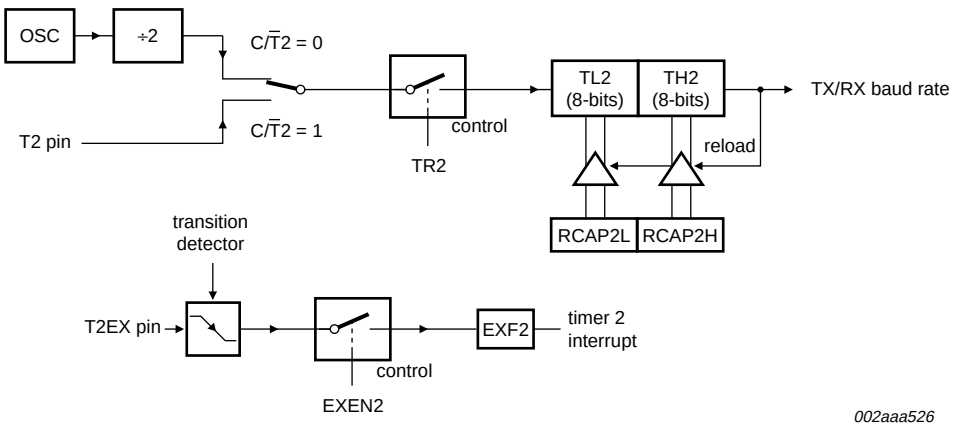

Fig 15. Timer 2 in Baud Rate Generator mode

The baud rate generation mode is like the auto-reload mode, when a rollover in TH2 causes the Timer 2 registers to be reloaded with the 16-bit value in registers RCAP2H and RCAP2L, which are preset by software.

The baud rates in modes 1 and 3 are determined by Timer 2's overflow rate given below:

Modes 1 and 3 baud rates = Timer 2 Overflow Rate / 16

The timer can be configured for either 'timer' or 'counter' operation. In many applications, it is configured for 'timer' operation (C/$\overline{T}$2 = 0). Timer operation is different for Timer 2 when it is being used as a baud rate generator.

Usually, as a timer it would increment every machine cycle (i.e., $\frac{1}{6}$ the oscillator frequency). As a baud rate generator, it increments at the oscillator frequency. Thus the baud rate formula is as follows:

Modes 1 and 3 baud rates =

$$\frac{OscillatorFrequency}{(n \times (65536 - (RCAP2H, RCAP2L)))} \quad (3)$$

n = 32 in X1 mode, 16 in X2 mode

Where: (RCAP2H, RCAP2L) = The content of RCAP2H and RCAP2L taken as a 16-bit unsigned integer.

The Timer 2 as a baud rate generator mode is valid only if RCLK and/or TCLK = 1 in T2CON register. Note that a rollover in TH2 does not set TF2, and will not generate an interrupt. Thus, the Timer 2 interrupt does not have to be disabled when Timer 2 is in the baud rate generator mode. Also if the EXEN2 (T2 external enable flag) is set, a 1-to-0 transition in T2EX (Timer/counter 2 trigger input) will set EXF2 (T2 external flag) but will

© NXP B.V. 2009. All rights reserved.

Downloaded from Arrow.com.

not cause a reload from (RCAP2H, RCAP2L) to (TH2,TL2). Therefore when Timer 2 is in use as a baud rate generator, T2EX can be used as an additional external interrupt, if needed.

When Timer 2 is in the baud rate generator mode, one should not try to read or write TH2 and TL2. Under these conditions, a read or write of TH2 or TL2 may not be accurate. The RCAP2 registers may be read, but should not be written to, because a write might overlap a reload and cause write and/or reload errors. The timer should be turned off (clear TR2) before accessing the Timer 2 or RCAP2 registers. Table 24 shows commonly used baud rates and how they can be obtained from Timer 2.

6.5.5 Summary of baud rate equations

Timer 2 is in baud rate generating mode. If Timer 2 is being clocked through pin T2 (P1.0) the baud rate is:

Baud rate = Timer 2 overflow rate / 16

If Timer 2 is being clocked internally, the baud rate is:

Baud rate = f_{osc} / (16 × (65536 – (RCAP2H, RCAP2L)))

Where f_{osc} = oscillator frequency

To obtain the reload value for RCAP2H and RCAP2L, the above equation can be rewritten as:

RCAP2H, RCAP2L = 65536 – f_{osc} / (16 × baud rate)

Table 24. Timer 2 generated commonly used baud rates

Rate	Osc freq	Timer 2	
		RCAP2H	RCAP2L
750 kBd	12 MHz	FF	FF
19.2 kBd	12 MHz	FF	D9
9.6 kBd	12 MHz	FF	B2
4.8 kBd	12 MHz	FF	64
2.4 kBd	12 MHz	FE	C8
600 Bd	12 MHz	FB	1E
220 Bd	12 MHz	F2	AF
600 Bd	6 MHz	FD	8F
220 Bd	6 MHz	F9	57

6.6 UARTs

The UART operates in all standard modes. Enhancements over the standard 80C51 UART include Framing Error detection, and automatic address recognition.

6.6.1 Mode 0

Serial data enters and exits through RXD and TXD outputs the shift clock. Only 8 bits are transmitted or received, LSB first. The baud rate is fixed at $\frac{1}{6}$ of the CPU clock frequency. UART configured to operate in this mode outputs serial clock on TXD line no matter whether it sends or receives data on RXD line.

© NXP B.V. 2009. All rights reserved.

Downloaded from Arrow.com.

6.6.2 Mode 1

10 bits are transmitted (through TXD) or received (through RXD): a start bit (logical 0), 8 data bits (LSB first), and a stop bit (logical 1). When data is received, the stop bit is stored in RB8 in Special Function Register SCON. The baud rate is variable and is determined by the Timer $\frac{1}{2}$ overflow rate.

6.6.3 Mode 2

11 bits are transmitted (through TXD) or received (through RXD): start bit (logical 0), 8 data bits (LSB first), a programmable 9th data bit, and a stop bit (logical 1). When data is transmitted, the 9th data bit (TB8 in SCON) can be assigned the value of 0 or (e.g. the parity bit (P, in the PSW) could be moved into TB8). When data is received, the 9th data bit goes into RB8 in Special Function Register SCON, while the stop bit is ignored. The baud rate is programmable to either $\frac{1}{16}$ or $\frac{1}{32}$ of the CPU clock frequency, as determined by the SMOD1 bit in PCON.

6.6.4 Mode 3

11 bits are transmitted (through TXD) or received (through RXD): a start bit (logical 0), 8 data bits (LSB first), a programmable 9th data bit, and a stop bit (logical 1). In fact, mode 3 is the same as mode 2 in all respects except baud rate. The baud rate in mode 3 is variable and is determined by the Timer $\frac{1}{2}$ overflow rate.

Table 25. SCON - Serial port control register (address 98H) bit allocation

Bit addressable; Reset value: 00H

Bit	7	6	5	4	3	2	1	0
Symbol	SM0/FE	SM1	SM2	REN	TB8	RB8	TI	RI

Table 26. SCON - Serial port control register (address 98H) bit description

Bit	Symbol	Description
7	SM0/FE	The usage of this bit is determined by SMOD0 in the PCON register. If SMOD0 = 0, this bit is SM0, which with SM1, defines the serial port mode. If SMOD0 = 1, this bit is FE (Framing Error). FE is set by the receiver when an invalid stop bit is detected. Once set, this bit cannot be cleared by valid frames but can only be cleared by software. (Note: It is recommended to set up UART mode bits SM0 and SM1 before setting SMOD0 to '1'.)
6	SM1	With SM0, defines the serial port mode (see Table 27 below).
5	SM2	Enables the multiprocessor communication feature in modes 2 and 3. In mode 2 or 3, if SM2 is set to '1', then RI will not be activated if the received 9th data bit (RB8) is '0'. In mode 1, if SM2 = 1 then RI will not be activated if a valid stop bit was not received. In mode 0, SM2 should be '0'.
4	REN	Enables serial reception. Set by software to enable reception. Clear by software to disable reception.
3	TB8	The 9th data bit that will be transmitted in modes 2 and 3. Set or clear by software as desired.

© NXP B.V. 2009. All rights reserved.

Downloaded from Arrow.com.

Table 26. SCON - Serial port control register (address 98H) bit description *...continued*

Bit	Symbol	Description
2	RB8	In modes 2 and 3, is the 9th data bit that was received. In mode 1, if SM2 = 0, RB8 is the stop bit that was received. In mode 0, RB8 is undefined.
1	TI	Transmit interrupt flag. Set by hardware at the end of the 8th bit time in mode 0, or at the stop bit in the other modes, in any serial transmission. Must be cleared by software.
0	RI	Receive interrupt flag. Set by hardware at the end of the 8th bit time in mode 0, or approximately halfway through the stop bit time in all other modes. (See SM2 for exceptions). Must be cleared by software.

Table 27. SCON - Serial port control register (address 98H) SM0/SM1 mode definition

SM0, SM1	UART mode	Baud rate
0 0	0: shift register	CPU clock / 6
0 1	1: 8-bit UART	variable
1 0	2: 9-bit UART	CPU clock / 32 or CPU clock / 16
1 1	3: 9-bit UART	variable

6.6.5 Framing error

Framing error (FE) is reported in the SCON.7 bit if SMOD0 (PCON.6) = 1. If SMOD0 = 0, SCON.7 is the SM0 bit for the UART, it is recommended that SM0 is set up before SMOD0 is set to ‘1’.

6.6.6 More about UART mode 1

Reception is initiated by a detected 1-to-0 transition at RXD. For this purpose RXD is sampled at a rate of 16 times whatever baud rate has been established. When a transition is detected, the divide-by-16 counter is immediately reset to align its rollovers with the boundaries of the incoming bit times.

The 16 states of the counter divide each bit time into 16ths. At the 7th, 8th, and 9th counter states of each bit time, the bit detector samples the value of RXD. The value accepted is the value that was seen in at least 2 of the 3 samples. This is done for noise rejection. If the value accepted during the first bit time is not 0, the receive circuits are reset and the unit goes back to looking for another 1-to-0 transition. This is to provide rejection of false start bits. If the start bit proves valid, it is shifted into the input shift register, and reception of the rest of the frame will proceed.

The signal to load SBUF and RB8, and to set RI, will be generated if, and only if, the following conditions are met at the time the final shift pulse is generated: (a) RI = 0, and (b) either SM2 = 0, or the received stop bit = 1.

If either of these two conditions is not met, the received frame is irretrievably lost. If both conditions are met, the stop bit goes into RB8, the 8 data bits go into SBUF, and RI is activated.

6.6.7 More about UART modes 2 and 3

Reception is performed in the same manner as in mode 1.

© NXP B.V. 2009. All rights reserved.

Downloaded from Arrow.com.

The signal to load SBUF and RB8, and to set RI, will be generated if, and only if, the following conditions are met at the time the final shift pulse is generated: (a) RI = 0, and (b) either SM2 = 0, or the received 9th data bit = 1.

If either of these conditions is not met, the received frame is irretrievably lost, and RI is not set. If both conditions are met, the received 9th data bit goes into RB8, and the first 8 data bits go into SBUF.

6.6.8 Multiprocessor communications

UART modes 2 and 3 have a special provision for multiprocessor communications. In these modes, 9 data bits are received or transmitted. When data is received, the 9th bit is stored in RB8. The UART can be programmed so that when the stop bit is received, the serial port interrupt will be activated only if RB8 = 1. This feature is enabled by setting bit SM2 in SCON. One way to use this feature in multiprocessor systems is as follows:

When the master processor wants to transmit a block of data to one of several slaves, it first sends out an address byte which identifies the target slave. An address byte differs from a data byte in a way that the 9th bit is ‘1’ in an address byte and ‘0’ in the data byte. With SM2 = 1, no slave will be interrupted by a data byte, i.e. the received 9th bit is ‘0’. However, an address byte having the 9th bit set to ‘1’ will interrupt all slaves, so that each slave can examine the received byte and see if it is being addressed or not. The addressed slave will clear its SM2 bit and prepare to receive the data (still 9 bits long) that follow. The slaves that weren’t being addressed leave their SM2 bits set and go on about their business, ignoring the subsequent data bytes.

SM2 has no effect in mode 0, and in mode 1 can be used to check the validity of the stop bit, although this is better done with the Framing Error flag. When UART receives data in mode 1 and SM2 = 1, the receive interrupt will not be activated unless a valid stop bit is received.

6.6.9 Automatic address recognition

Automatic Address Recognition is a feature which allows the UART to recognize certain addresses in the serial bit stream by using hardware to make the comparisons. This feature saves a great deal of software overhead by eliminating the need for the software to examine every serial address which passes by the serial port. This feature is enabled for the UART by setting the SM2 bit in SCON. In the 9 bit UART modes, mode 2 and mode 3, the Receive Interrupt flag (RI) will be automatically set when the received byte contains either the ‘Given’ address or the ‘Broadcast' address. The 9 bit mode requires that the 9th information bit is a ‘1’ to indicate that the received information is an address and not data.

Using the Automatic Address Recognition feature allows a master to selectively communicate with one or more slaves by invoking the Given slave address or addresses. All of the slaves may be contacted by using the Broadcast address. Two Special Function Registers are used to define the slave’s address, SADDR, and the address mask, SADEN. SADEN is used to define which bits in the SADDR are to be used and which bits are ‘don’t care’. The SADEN mask can be logically ANDed with the SADDR to create the ‘Given’ address which the master will use for addressing each of the slaves. Use of the Given address allows multiple slaves to be recognized while excluding others.

This device uses the methods presented in Figure 16 to determine if a ‘Given’ or ‘Broadcast’ address has been received or not.

© NXP B.V. 2009. All rights reserved.

Downloaded from Arrow.com.

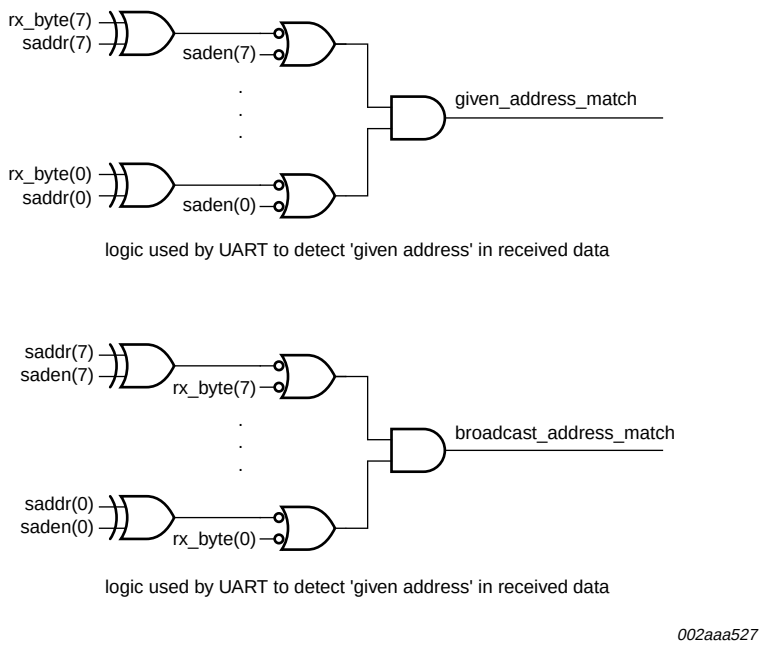

Fig 16. Schemes used by the UART to detect 'given' and 'broadcast' addresses when multiprocessor communications is enabled

The following examples will help to show the versatility of this scheme.

Example 1, slave 0:

$$\begin{array}{r} \text{SADDR} = 1100\ 0000 \\ \underline{\text{SADEN} = 1111\ 1101} \\ \text{Given} = 1100\ 00\text{X}0 \end{array} \quad (4)$$

Example 2, slave 1:

$$\begin{array}{r} \text{SADDR} = 1100\ 0000 \\ \underline{\text{SADEN} = 1111\ 1110} \\ \text{Given} = 1100\ 000\text{X} \end{array} \quad (5)$$

In the above example SADDR is the same and the SADEN data is used to differentiate between the two slaves. Slave 0 requires a '0' in bit 0 and it ignores bit 1. Slave 1 requires a '0' in bit 1 and bit 0 is ignored. A unique address for Slave 0 would be 1100 0010 since slave 1 requires a '0' in bit 1. A unique address for slave 1 would be 1100 0001 since a '1' in bit 0 will exclude slave 0. Both slaves can be selected at the same time by an address which has bit 0 = 0 (for slave 0) and bit 1 = 0 (for slave 1). Thus, both could be addressed with 1100 0000.

© NXP B.V. 2009. All rights reserved.

Downloaded from Arrow.com.

In a more complex system the following could be used to select slaves 1 and 2 while excluding slave 0:

Example 1, slave 0:

$$\begin{array}{r} \text{SADDR} = 1100\ 0000 \\ \underline{\text{SADEN} = 1111\ 1001} \\ \text{Given} = 1100\ 0\text{XX}0 \end{array} \quad (6)$$

Example 2, slave 1:

$$\begin{array}{r} \text{SADDR} = 1110\ 0000 \\ \underline{\text{SADEN} = 1111\ 1010} \\ \text{Given} = 1110\ 0\text{X}0\text{X} \end{array} \quad (7)$$

Example 3, slave 2:

$$\begin{array}{r} \text{SADDR} = 1100\ 0000 \\ \underline{\text{SADEN} = 1111\ 1100} \\ \text{Given} = 1100\ 00\text{XX} \end{array} \quad (8)$$

In the above example the differentiation among the 3 slaves is in the lower 3 address bits. Slave 0 requires that bit 0 = 0 and it can be uniquely addressed by 1110 0110. Slave 1 requires that bit 1 = 0 and it can be uniquely addressed by 1110 0101. Slave 2 requires that bit 2 = 0 and its unique address is 1110 0011. To select Slaves 0 and 1 and exclude Slave 2 use address 1110 0100, since it is necessary to make bit 2 = 1 to exclude slave 2. The Broadcast Address for each slave is created by taking the logical OR of SADDR and SADEN. Zeros in this result are treated as don't-cares. In most cases, interpreting the don't-cares as ones, the broadcast address will be FF hexadecimal. Upon reset SADDR and SADEN are loaded with 0s. This produces a given address of all 'don't cares' as well as a Broadcast address of all 'don't cares'. This effectively disables the Automatic Addressing mode and allows the microcontroller to use standard UART drivers which do not make use of this feature.

6.7 SPI

6.7.1 SPI features

- Master or slave operation
- 10 MHz bit frequency (max)
- LSB first or MSB first data transfer
- Four programmable bit rates
- End of transmission (SPIF)
- Write collision flag protection (WCOL)
- Wake-up from Idle mode (slave mode only)

6.7.2 SPI description

The SPI allows high-speed synchronous data transfer between the P89V51RB2/RC2/RD2 and peripheral devices or between several P89V51RB2/RC2/RD2 devices. Figure 17 shows the correspondence between master and slave SPI devices. The SPICLK pin is the

© NXP B.V. 2009. All rights reserved.

Downloaded from Arrow.com.

clock output and input for the master and slave modes, respectively. The SPI clock generator will start following a write to the master devices SPI data register. The written data is then shifted out of the MOSI pin on the master device into the MOSI pin of the slave device. Following a complete transmission of one byte of data, the SPI clock generator is stopped and the SPIF flag is set. An SPI interrupt request will be generated if the SPI Interrupt Enable bit (SPIE) and the Serial Port Interrupt Enable bit (ES) are both set.

An external master drives the Slave Select input pin, $\overline{SS}$/P1[4], low to select the SPI module as a slave. If $\overline{SS}$/P1[4] has not been driven low, then the slave SPI unit is not active and the MOSI/P1[5] port can also be used as an input port pin.

CPHA and CPOL control the phase and polarity of the SPI clock. Figure 18 and Figure 19 show the four possible combinations of these two bits.

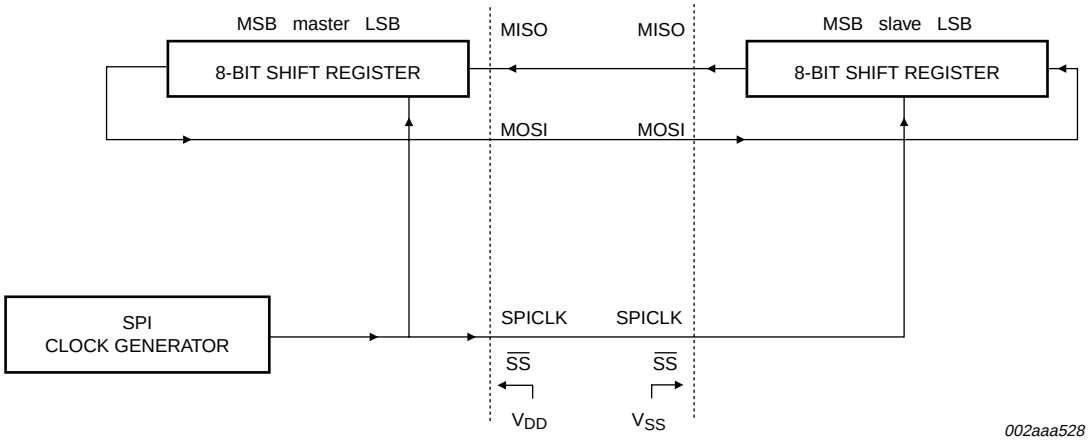

Fig 17. SPI master-slave interconnection

Table 28. SPCR - SPI control register (address D5H) bit allocation

Bit addressable; Reset source(s): any reset; Reset value: 0000 0000B

Bit	7	6	5	4	3	2	1	0
Symbol	SPIE	SPE	DORD	MSTR	CPOL	CPHA	SPR1	SPR0

Table 29. SPCR - SPI control register (address D5H) bit description

Bit	Symbol	Description
7	SPIE	If both SPIE and ES are set to one, SPI interrupts are enabled.
6	SPE	SPI enable bit. When set enables SPI.
5	DORD	Data transmission order. 0 = MSB first; 1 = LSB first in data transmission.
4	MSTR	Master/slave select. 1 = master mode, 0 = slave mode.
3	CPOL	Clock polarity. 1 = SPICLK is high when idle (active LOW), 0 = SPICLK is low when idle (active HIGH).

© NXP B.V. 2009. All rights reserved.

Downloaded from Arrow.com.

Table 29. SPCR - SPI control register (address D5H) bit description *...continued*

Bit	Symbol	Description
2	CPHA	Clock Phase control bit. 1 = shift triggered on the trailing edge of the clock; 0 = shift triggered on the leading edge of the clock.
1	SPR1	SPI Clock Rate Select bit 1. Along with SPR0 controls the SPICLK rate of the device when a master. SPR1 and SPR0 have no effect on the slave. See Table 30 below.
0	SPR0	SPI Clock Rate Select bit 0. Along with SPR1 controls the SPICLK rate of the device when a master. SPR1 and SPR0 have no effect on the slave. See Table 30 below.

Table 30. SPCR - SPI control register (address D5H) clock rate selection

SPR1	SPR0	SPICLK = f_{osc} divided by
0	0	4
0	1	16
1	0	64
1	1	128

Table 31. SPSR - SPI status register (address AAH) bit allocation

Bit addressable; Reset source(s): any reset; Reset value: 0000 0000B

Bit	7	6	5	4	3	2	1	0
Symbol	SPIF	WCOL	-	-	-	-	-	-

Table 32. SPSR - SPI status register (address AAH) bit description

Bit	Symbol	Description
7	SPIF	SPI interrupt flag. Upon completion of data transfer, this bit is set to '1'. If SPIE = 1 and ES = 1, an interrupt is then generated. This bit is cleared by software.
6	WCOL	Write Collision Flag. Set if the SPI data register is written to during data transfer. This bit is cleared by software.
5 to 0	-	Reserved for future use. Should be set to '0' by user programs.

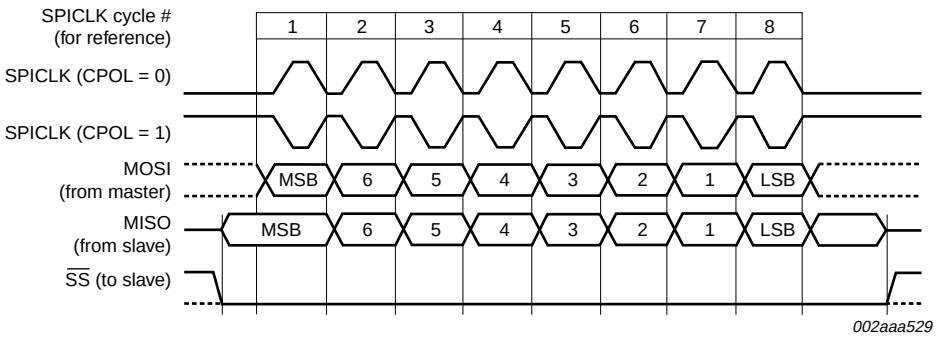

Fig 18. SPI transfer format with CPHA = 0

© NXP B.V. 2009. All rights reserved.

Downloaded from Arrow.com.

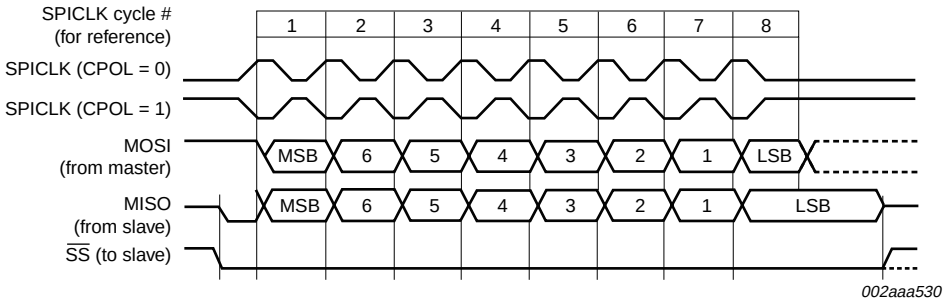

Fig 19. SPI transfer format with CPHA = 1

6.8 Watchdog timer

The device offers a programmable Watchdog Timer (WDT) for fail safe protection against software deadlock and automatic recovery.

To protect the system against software deadlock, the user software must refresh the WDT within a user-defined time period. If the software fails to do this periodical refresh, an internal hardware reset will be initiated if enabled (WDRE = 1). The software can be designed such that the WDT times out if the program does not work properly.

The WDT in the device uses the system clock (XTAL1) as its time base. So strictly speaking, it is a Watchdog counter rather than a WDT. The WDT register will increment every 344064 crystal clocks. The upper 8-bits of the time base register (WDTD) are used as the reload register of the WDT.

The WDTS flag bit is set by WDT overflow and is not changed by WDT reset. User software can clear WDTS by writing ‘1' to it.

Figure 20 provides a block diagram of the WDT. Two SFRs (WDTC and WDTD) control WDT operation. During Idle mode, WDT operation is temporarily suspended, and resumes upon an interrupt exit from idle.

The time-out period of the WDT is calculated as follows:

$$\text{Period} = (255 - \text{WDTD}) \times 344064 \times 1 / f_{CLK(XTAL1)}$$

where WDTD is the value loaded into the WDTD register and f_{osc} is the oscillator frequency.

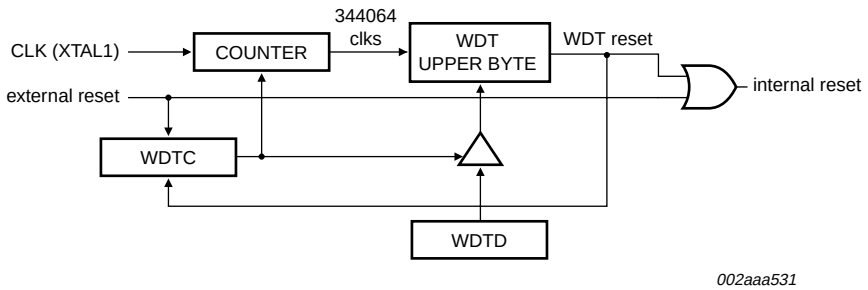

Fig 20. Block diagram of programmable WDT

© NXP B.V. 2009. All rights reserved.

Downloaded from Arrow.com.

Table 33. WDTC - Watchdog control register (address COH) bit allocation

Bit addressable; Reset value: 00H

Bit	7	6	5	4	3	2	1	0
Symbol	-	-	-	WDOUT	WDRE	WDTS	WDT	SWDT

Table 34. WDTC - Watchdog control register (address COH) bit description

Bit	Symbol	Description
7 to 5	-	Reserved for future use. Should be set to ‘0’ by user programs.
4	WDOUT	Watchdog output enable. When this bit and WDRE are both set, a Watchdog reset will drive the reset pin active for 32 clocks.
3	WDRE	Watchdog timer reset enable. When set enables a watchdog timer reset.
2	WDTS	Watchdog timer reset flag, when set indicates that a WDT reset occurred. Reset in software.
1	WDT	Watchdog timer refresh. Set by software to force a WDT reset.
0	SWDT	Start watchdog timer, when set starts the WDT. When cleared, stops the WDT.

6.9 PCA

The PCA includes a special 16-bit Timer that has five 16-bit capture/compare modules associated with it. Each of the modules can be programmed to operate in one of four modes: rising and/or falling edge capture, software timer, high-speed output, or PWM. Each module has a pin associated with it in port 1. Module 0 is connected to P1.3 (CEX0), module 1 to P1.4 (CEX1), etc. Registers CH and CL contain current value of the free running up counting 16-bit PCA timer. The PCA timer is a common time base for all five modules and can be programmed to run at: $1/6$ the oscillator frequency, $1/2$ the oscillator frequency, the Timer 0 overflow, or the input on the ECI pin (P1.2). The timer count source is determined from the CPS1 and CPS0 bits in the CMOD SFR (see Table 35 and Table 36).

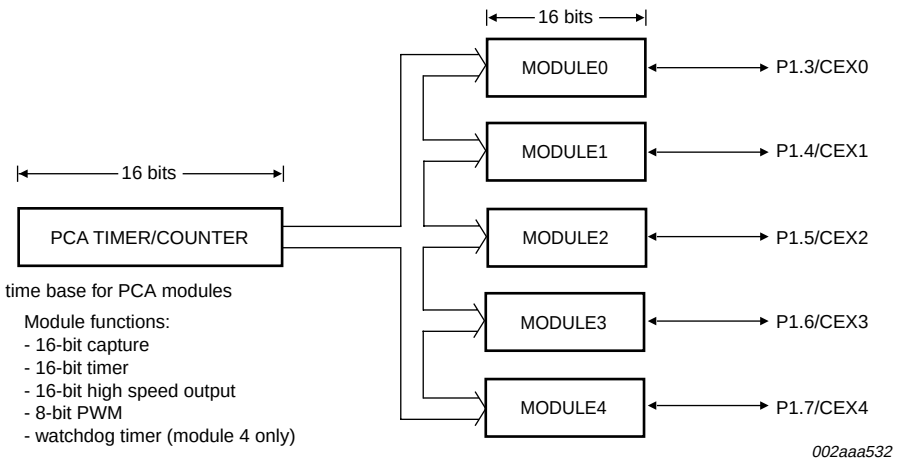

Fig 21. PCA

© NXP B.V. 2009. All rights reserved.

Downloaded from Arrow.com.

In the CMOD SFR there are three additional bits associated with the PCA. They are CIDL which allows the PCA to stop during Idle mode, WDTE which enables or disables the Watchdog function on module 4, and ECF which when set causes an interrupt and the PCA overflow flag CF (in the CCON SFR) to be set when the PCA timer overflows.

The watchdog timer function is implemented in module 4 of PCA.

The CCON SFR contains the run control bit for the PCA (CR) and the flags for the PCA timer (CF) and each module (CCF4:0). To run the PCA the CR bit (CCON.6) must be set by software. The PCA is shut off by clearing this bit. The CF bit (CCON.7) is set when the PCA counter overflows and an interrupt will be generated if the ECF bit in the CMOD register is set. The CF bit can only be cleared by software. Bits 0 through 4 of the CCON register are the flags for the modules (bit 0 for module 0, bit 1 for module 1, etc.) and are set by hardware when either a match or a capture occurs. These flags can only be cleared by software. All the modules share one interrupt vector. The PCA interrupt system is shown in Figure 22.

Each module in the PCA has a special function register associated with it. These registers are: CCAPM0 for module 0, CCAPM1 for module 1, etc. The registers contain the bits that control the mode that each module will operate in.

The ECCF bit (from CCAPMn.0 where n = 0, 1, 2, 3, or 4 depending on the module) enables the CCFn flag in the CCON SFR to generate an interrupt when a match or compare occurs in the associated module (see Figure 22).

PWM (CCAPMn.1) enables the pulse width modulation mode.

The TOG bit (CCAPMn.2) when set causes the CEX output associated with the module to toggle when there is a match between the PCA counter and the module's capture/compare register.

The match bit MAT (CCAPMn.3) when set will cause the CCFn bit in the CCON register to be set when there is a match between the PCA counter and the module's capture/compare register.

The next two bits CAPN (CCAPMn.4) and CAPP (CCAPMn.5) determine the edge that a capture input will be active on. The CAPN bit enables the negative edge, and the CAPP bit enables the positive edge. If both bits are set both edges will be enabled and a capture will occur for either transition.

The last bit in the register ECOM (CCAPMn.6) when set enables the comparator function.

There are two additional registers associated with each of the PCA modules. They are CCAPnH and CCAPnL and these are the registers that store the 16-bit count when a capture occurs or a compare should occur. When a module is used in the PWM mode these registers are used to control the duty cycle of the output.

© NXP B.V. 2009. All rights reserved.

Downloaded from Arrow.com.

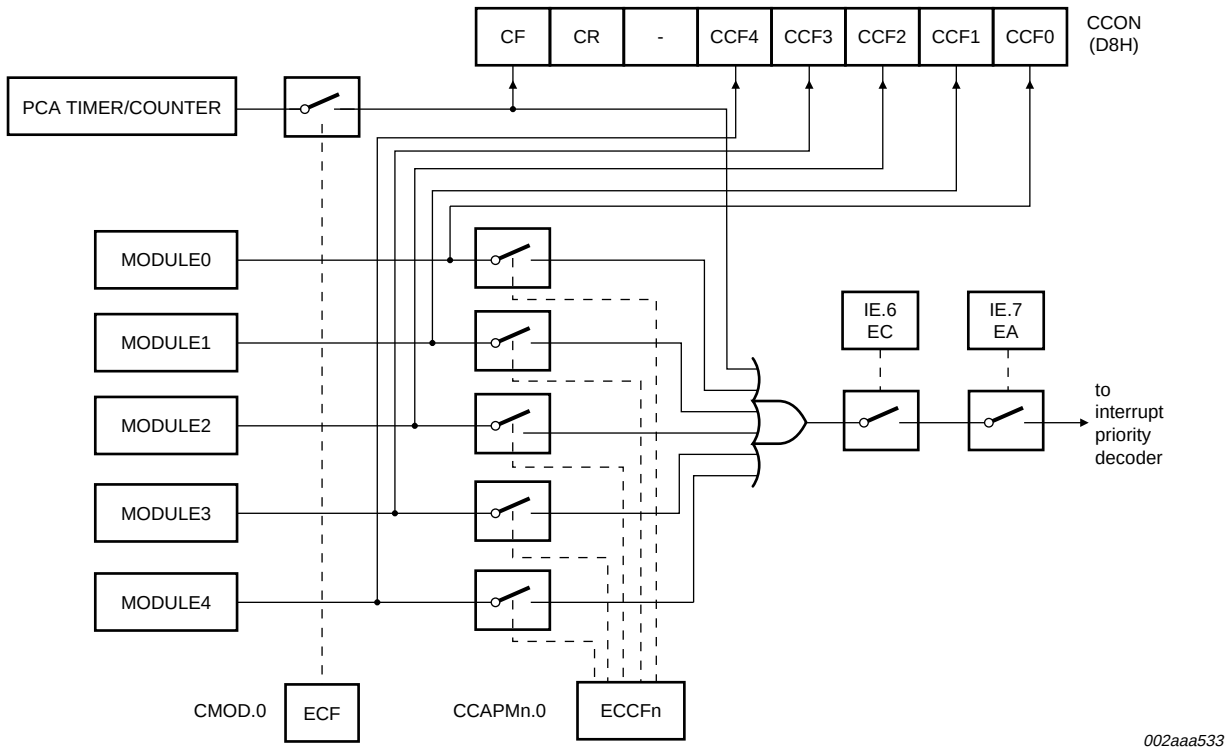

Fig 22. PCA interrupt system

Table 35. CMOD - PCA counter mode register (address D9H) bit allocation

Not bit addressable; Reset value: 00H

Bit	7	6	5	4	3	2	1	0
Symbol	CIDL	WDTE	-	-	-	CPS1	CPS0	ECF

Table 36. CMOD - PCA counter mode register (address D9H) bit description

Bit	Symbol	Description
7	CIDL	Counter Idle Control: CIDL = 0 programs the PCA Counter to continue functioning during Idle mode. CIDL = 1 programs it to be gated off during idle.
6	WDTE	Watchdog Timer Enable: WDTE = 0 disables watchdog timer function on module 4. WDTE = 1 enables it.
5 to 3	-	Reserved for future use. Should be set to ‘0’ by user programs.
2 to 1	CPS1, CPS0	PCA Count Pulse Select (see Table 37 below).
0	ECF	PCA Enable Counter Overflow Interrupt: ECF = 1 enables CF bit in CCON to generate an interrupt. ECF = 0 disables that function.

© NXP B.V. 2009. All rights reserved.

Downloaded from Arrow.com.

Table 37. CMOD - PCA counter mode register (address D9H) count pulse select

CPS1	CPS0	Select PCA input
0	0	0 Internal clock, f_{osc} / 6
0	1	1 Internal clock, f_{osc} / 2
1	0	2 Timer 0 overflow
1	1	3 External clock at ECI/P1.2 pin (max rate = f_{osc} / 4)

Table 38. CCON - PCA counter control register (address 0D8H) bit allocation

Bit addressable; Reset value: 00H

Bit	7	6	5	4	3	2	1	0
Symbol	CF	CR	-	CCF4	CCF3	CCF2	CCF1	CCF0

Table 39. CCON - PCA counter control register (address 0D8H) bit description

Bit	Symbol	Description
7	CF	PCA counter overflow flag. Set by hardware when the counter rolls over. CF flags an interrupt if bit ECF in CMOD is set. CF may be set by either hardware or software but can only be cleared by software.
6	CR	PCA counter run control bit. Set by software to turn the PCA counter on. Must be cleared by software to turn the PCA counter off.
5	-	Reserved for future use. Should be set to ‘0’ by user programs.
4	CCF4	PCA Module 4 Interrupt Flag. Set by hardware when a match or capture occurs. Must be cleared by software.
3	CCF3	PCA Module 3 Interrupt Flag. Set by hardware when a match or capture occurs. Must be cleared by software.
2	CCF2	PCA Module 2 Interrupt Flag. Set by hardware when a match or capture occurs. Must be cleared by software.
1	CCF1	PCA Module 1 Interrupt Flag. Set by hardware when a match or capture occurs. Must be cleared by software.
0	CCF0	PCA Module 0 Interrupt Flag. Set by hardware when a match or capture occurs. Must be cleared by software.

Table 40. CCAPMn - PCA modules compare/capture register (address CCAPM0 0DAH, CCAPM1 0DBH, CCAPM2 0DCH, CCAPM3 0DDH, CCAPM4 0DEH) bit allocation

Not bit addressable; Reset value: 00H

Bit	7	6	5	4	3	2	1	0
Symbol	-	ECOMn	CAPPn	CAPNn	MATn	TOGn	PWMn	ECCFn

Table 41. CCAPMn - PCA modules compare/capture register (address CCAPM0 0DAH, CCAPM1 0DBH, CCAPM2 0DCH, CCAPM3 0DDH, CCAPM4 0DEH) bit description

Bit	Symbol	Description
7	-	Reserved for future use. Should be set to ‘0’ by user programs.
6	ECOMn	Enable Comparator. ECOMn = 1 enables the comparator function.
5	CAPPn	Capture Positive, CAPPn = 1 enables positive edge capture.
4	CAPNn	Capture Negative, CAPNn = 1 enables negative edge capture.
3	MATn	Match. When MATn = 1 a match of the PCA counter with this module’s compare/capture register causes the CCFn bit in CCON to be set, flagging an interrupt.

© NXP B.V. 2009. All rights reserved.

Downloaded from Arrow.com.

Table 41. CCAPMn - PCA modules compare/capture register (address CCAPM0 0DAH, CCAPM1 0DBH, CCAPM2 0DCH, CCAPM3 0DDH, CCAPM4 0DEH) bit description

Bit	Symbol	Description
2	TOGn	Toggle. When TOGn = 1, a match of the PCA counter with this module's compare/capture register causes the CEXn pin to toggle.
1	PWMn	Pulse Width Modulation mode. PWMn = 1 enables the CEXn pin to be used as a pulse width modulated output.
0	ECCFn	Enable CCF Interrupt. Enables compare/capture flag CCFn in the CCON register to generate an interrupt.

Table 42. PCA module modes (CCAPMn register)

ECOMn	CAPPn	CAPNn	MATn	TOGn	PWMn	ECCFn	Module function
0	0	0	0	0	0	0	no operation
x	1	0	0	0	0	x	16-bit capture by a positive-edge trigger on CEXn
x	0	1	0	0	0	x	16-bit capture by a negative-edge trigger on CEXn
x	1	1	0	0	0	x	16-bit capture by any transition on CEXn
1	0	0	1	0	0	x	16-bit software timer
1	0	0	1	1	0	x	16-bit high-speed output
1	0	0	0	0	1	0	8-bit PWM
1	0	0	1	x	0	x	Watchdog timer

6.9.1 PCA capture mode

To use one of the PCA modules in the capture mode (Figure 23) either one or both of the CCAPM bits CAPN and CAPP for that module must be set. The external CEX input for the module (on port 1) is sampled for a transition. When a valid transition occurs the PCA hardware loads the value of the PCA counter registers (CH and CL) into the module's capture registers (CCAPnL and CCAPnH).

© NXP B.V. 2009. All rights reserved.

Downloaded from Arrow.com.

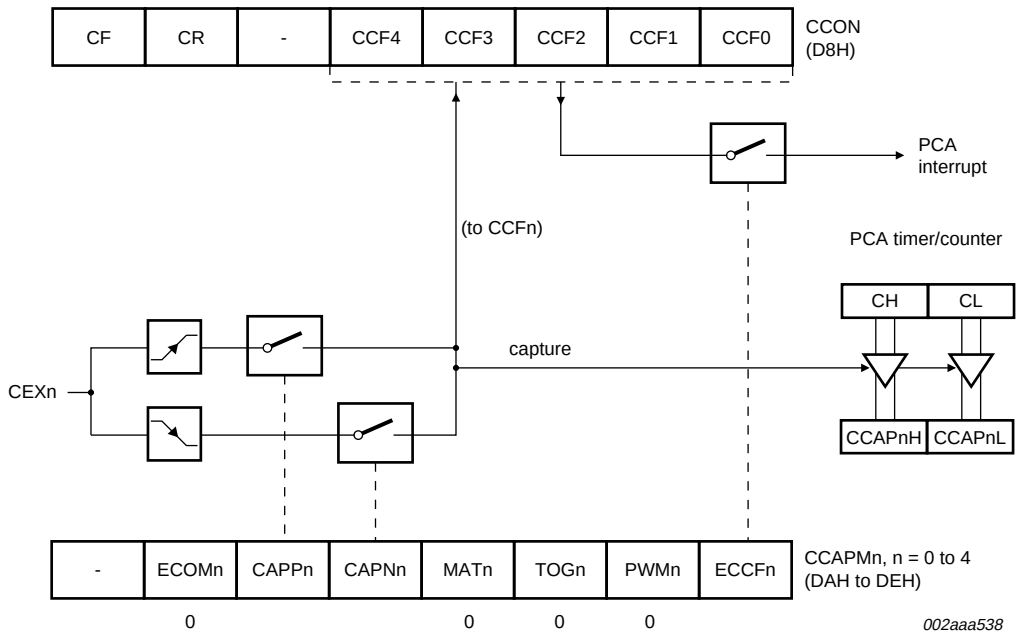

Fig 23. PCA capture mode

If the CCFn bit for the module in the CCON SFR and the ECCFn bit in the CCAPMn SFR are set then an interrupt will be generated.

6.9.2 16-bit software timer mode

The PCA modules can be used as software timers (Figure 24) by setting both the ECOM and MAT bits in the modules CCAPMn register. The PCA timer will be compared to the module's capture registers and when a match occurs an interrupt will occur if the CCFn (CCON SFR) and the ECCFn (CCAPMn SFR) bits for the module are both set.

© NXP B.V. 2009. All rights reserved.

Downloaded from Arrow.com.

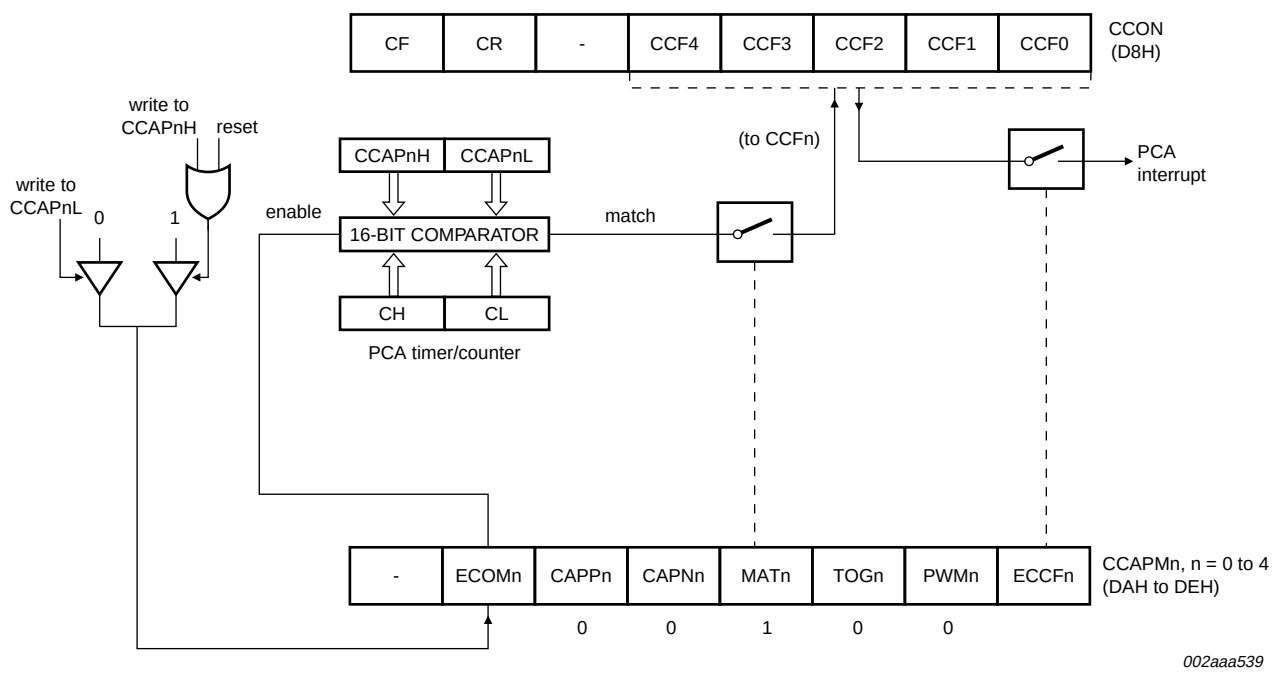

Fig 24. PCA compare mode

6.9.3 High-speed output mode

In this mode (Figure 25) the CEX output (on port 1) associated with the PCA module will toggle each time a match occurs between the PCA counter and the module's capture registers. To activate this mode the TOG, MAT, and ECOM bits in the module's CCAPMn SFR must be set.

© NXP B.V. 2009. All rights reserved.

Downloaded from Arrow.com.

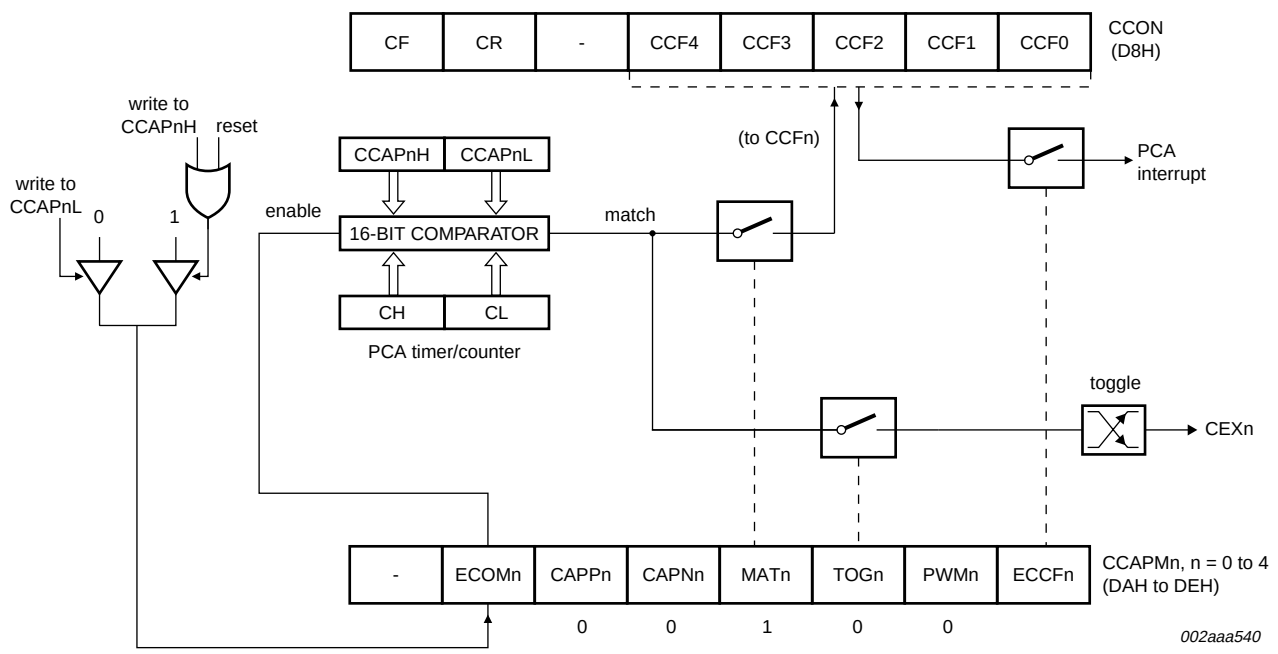

Fig 25. PCA high-speed output mode

6.9.4 PWM mode

All of the PCA modules can be used as PWM outputs (Figure 26). Output frequency depends on the source for the PCA timer.

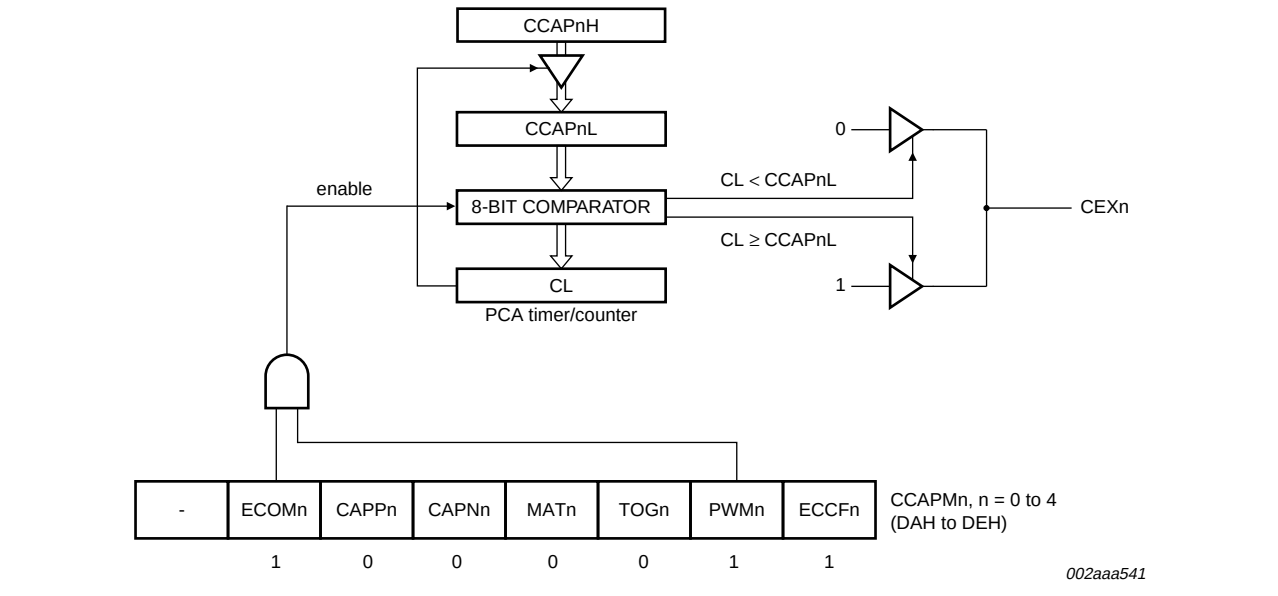

Fig 26. PCA PWM mode

All of the modules will have the same frequency of output because they all share one and only PCA timer. The duty cycle of each module is independently variable using the module's capture register CCAPnL. When the value of the PCA CL SFR is less than the

© NXP B.V. 2009. All rights reserved.

Downloaded from Arrow.com.

value in the module's CCAPnL SFR the output will be low, when it is equal to or greater than the output will be high. When CL overflows from FF to 00, CCAPnL is reloaded with the value in CCAPnH. This allows updating the PWM without glitches. The PWM and ECOM bits in the module's CCAPMn register must be set to enable the PWM mode.

6.9.5 PCA watchdog timer

An on-board watchdog timer is available with the PCA to improve the reliability of the system without increasing chip count. Watchdog timers are useful for systems that are susceptible to noise, power glitches, or electrostatic discharge. Module 4 is the only PCA module that can be programmed as a Watchdog. However, this module can still be used for other modes if the Watchdog is not needed. Figure 26 shows a diagram of how the Watchdog works. The user pre-loads a 16-bit value in the compare registers. Just like the other compare modes, this 16-bit value is compared to the PCA timer value. If a match is allowed to occur, an internal reset will be generated. This will not cause the RST pin to be driven high.

User's software then must periodically change (CCAP4H,CCAP4L) to keep a match from occurring with the PCA timer (CH,CL). This code is given in the WATCHDOG routine shown above.

In order to hold off the reset, the user has three options:

1. Periodically change the compare value so it will never match the PCA timer.
2. Periodically change the PCA timer value so it will never match the compare values.
3. Disable the Watchdog by clearing the WDTE bit before a match occurs and then re-enable it.

The first two options are more reliable because the watchdog timer is never disabled as in option #3. If the program counter ever goes astray, a match will eventually occur and cause an internal reset. The second option is also not recommended if other PCA modules are being used. Remember, the PCA timer is the time base for **all** modules; changing the time base for other modules would not be a good idea. Thus, in most applications the first solution is the best option.

```
;CALL the following WATCHDOG subroutine periodically.
   CLR    EA           ;Hold off interrupts
   MOV    CCAP4L,#00   ;Next compare value is within 255 counts of
                        current PCA timer value
   MOV    CCAP4H,CH
   SETB   EA           ;Re-enable interrupts
   RET
```

This routine should not be part of an interrupt service routine, because if the program counter goes astray and gets stuck in an infinite loop, interrupts will still be serviced and the Watchdog will keep getting reset. Thus, the purpose of the Watchdog would be defeated. Instead, call this subroutine from the main program within 2^{16} count of the PCA timer.

© NXP B.V. 2009. All rights reserved.

Downloaded from Arrow.com.

6.10 Security bit

The Security Bit protects against software piracy and prevents the contents of the flash from being read by unauthorized parties in Parallel Programmer mode. It also protects against code corruption resulting from accidental erasing and programming to the internal flash memory.

When the Security Bit is activated all parallel programming commands except for Chip-Erase are ignored (thus the device cannot be read). However, ISP reading, writing, or erasing of the user's code can still be performed if the serial number and length has not been programmed. **Therefore, when a user requests to program the Security Bit, the programmer should prompt the user and program a serial number into the device.**

6.11 Interrupt priority and polling sequence

The device supports eight interrupt sources under a four level priority scheme. Table 43 summarizes the polling sequence of the supported interrupts. Note that the SPI serial interface and the UART share the same interrupt vector. (See Figure 27).

Table 43. Interrupt polling sequence

Description	Interrupt flag	Vector address	Interrupt enable	Interrupt priority	Service priority	Wake-up power-down
Ext. Int0	IE0	0003H	EX0	PX0/H	1 (highest)	yes
Brownout	-	004BH	EBO	PBO/H	2	no
T0	TF0	000BH	ET0	PT0/H	3	no
Ext. Int1	IE1	0013H	EX1	PX1/H	4	yes
T1	TF1	001BH	ET1	PT1/H	5	no
PCA	CF/CCFn	0033H	EC	PPCH	6	no
UART/SPI	TI/RI/SPIF	0023H	ES	PS/H	7	no
T2	TF2, EXF2	002BH	ET2	PT2/H	8	no

© NXP B.V. 2009. All rights reserved.

Downloaded from Arrow.com.

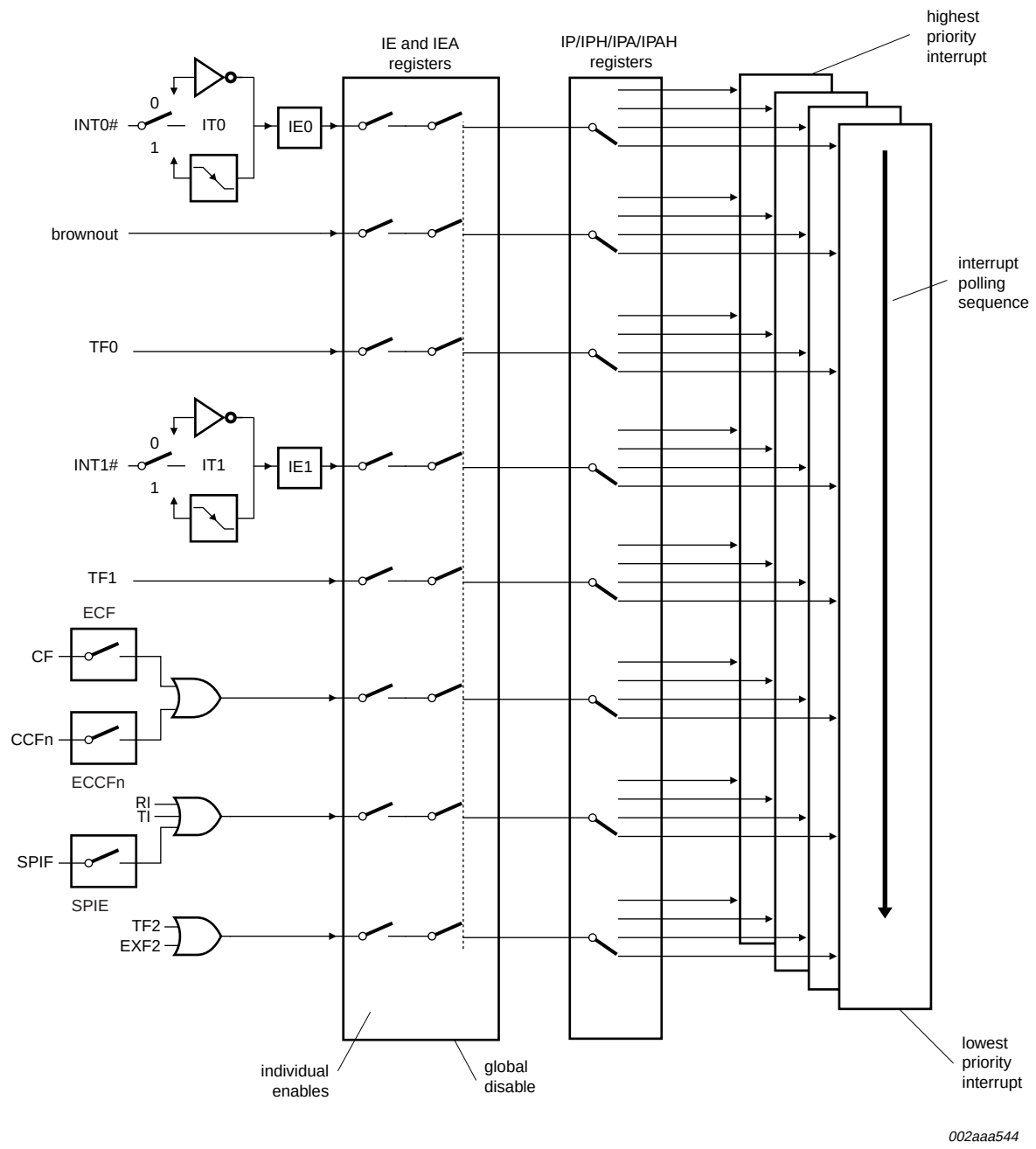

Fig 27. Interrupt structure

Table 44. IEN0 - Interrupt enable register 0 (address A8H) bit allocation

Bit addressable; Reset value: 00H

Bit	7	6	5	4	3	2	1	0
Symbol	EA	EC	ET2	ES	ET1	EX1	ET0	EX0

© NXP B.V. 2009. All rights reserved.

Downloaded from Arrow.com.

Table 45. IEN0 - Interrupt enable register 0 (address A8H) bit description

Bit	Symbol	Description
7	EA	Interrupt Enable Bit: EA = 1 interrupt(s) can be serviced, EA = 0 interrupt servicing disabled.
6	EC	PCA Interrupt Enable bit.
5	ET2	Timer 2 Interrupt Enable.
4	ES	Serial Port Interrupt Enable.
3	ET1	Timer 1 Overflow Interrupt Enable.
2	EX1	External Interrupt 1 Enable.
1	ET0	Timer 0 Overflow Interrupt Enable.
0	EX0	External Interrupt 0 Enable.

Table 46. IEN1 - Interrupt enable register 1 (address E8H) bit allocation

Bit addressable; Reset value: 00H

Bit	7	6	5	4	3	2	1	0
Symbol	-	-	-	-	EBO	-	-	-

Table 47. IEN1 - Interrupt enable register 1 (address E8H) bit description

Bit	Symbol	Description
7 to 4	-	Reserved for future use. Should be set to ‘0’ by user programs.
3	EBO	Brownout Interrupt Enable. 1 = enable, 0 = disable.
2 to 0	-	Reserved for future use. Should be set to ‘0’ by user programs.

Table 48. IP0 - Interrupt priority 0 low register (address B8H) bit allocation

Bit addressable; Reset value: 00H

Bit	7	6	5	4	3	2	1	0
Symbol	-	PPC	PT2	PS	PT1	PX1	PT0	PX0

Table 49. IP0 - Interrupt priority 0 low register (address B8H) bit description

Bit	Symbol	Description
7	-	Reserved for future use. Should be set to ‘0’ by user programs.
6	PPC	PCA interrupt priority LOW bit.
5	PT2	Timer 2 interrupt priority LOW bit.
4	PS	Serial Port interrupt priority LOW bit.
3	PT1	Timer 1 interrupt priority LOW bit.
2	PX1	External interrupt 1 priority LOW bit.
1	PT0	Timer 0 interrupt priority LOW bit.
0	PX0	External interrupt 0 priority LOW bit.

Table 50. IP0H - Interrupt priority 0 high register (address B7H) bit allocation

Not bit addressable; Reset value: 00H

Bit	7	6	5	4	3	2	1	0
Symbol	-	PPCH	PT2H	PSH	PT1H	PX1H	PT0H	PX0H

© NXP B.V. 2009. All rights reserved.

Downloaded from Arrow.com.

Table 51. IP0H - Interrupt priority 0 high register (address B7H) bit description

Bit	Symbol	Description
7	-	Reserved for future use. Should be set to ‘0’ by user programs.
6	PPCH	PCA interrupt priority HIGH bit.
5	PT2H	Timer 2 interrupt priority HIGH bit.
4	PSH	Serial Port interrupt priority HIGH bit.
3	PT1H	Timer 1 interrupt priority HIGH bit.
2	PX1H	External interrupt 1 priority HIGH bit.
1	PT0H	Timer 0 interrupt priority HIGH bit.
0	PX0H	External interrupt 0 priority HIGH bit.

Table 52. IP1 - Interrupt priority 1 register (address F8H) bit allocation

Bit addressable; Reset value: 00H

Bit	7	6	5	4	3	2	1	0
Symbol	-	-	-	PBO	-	-	-	-

Table 53. IP1 - Interrupt priority 1 register (address F8H) bit description

Bit	Symbol	Description
7 to 5	-	Reserved for future use. Should be set to ‘0’ by user programs.
4	PBO	Brownout interrupt priority bit.
3 to 0	-	Reserved for future use. Should be set to ‘0’ by user programs.

Table 54. IP1H - Interrupt priority 1 high register (address F7H) bit allocation

Not bit addressable; Reset value: 00H

Bit	7	6	5	4	3	2	1	0
Symbol	-	-	-	PBOH	-	-	-	-

Table 55. IP1H - Interrupt priority 1 high register (address F7H) bit description

Bit	Symbol	Description
7 to 5	-	Reserved for future use. Should be set to ‘0’ by user programs.
4	PBOH	Brownout interrupt priority bit.
3 to 0	-	Reserved for future use. Should be set to ‘0’ by user programs.

6.12 Power-saving modes

The device provides two power saving modes of operation for applications where power consumption is critical. The two modes are Idle and Power-down, see Table 56.

6.12.1 Idle mode

Idle mode is entered setting the IDL bit in the PCON register. In Idle mode, the program counter (PC) is stopped. The system clock continues to run and all interrupts and peripherals remain active. The on-chip RAM and the special function registers hold their data during this mode.

© NXP B.V. 2009. All rights reserved.

Downloaded from Arrow.com.

The device exits Idle mode through either a system interrupt or a hardware reset. Exiting Idle mode via system interrupt, the start of the interrupt clears the IDL bit and exits Idle mode. After exit the Interrupt Service Routine, the interrupted program resumes execution beginning at the instruction immediately following the instruction which invoked the Idle mode. A hardware reset starts the device similar to a power-on reset.

6.12.2 Power-down mode

The Power-down mode is entered by setting the PD bit in the PCON register. In the Power-down mode, the clock is stopped and external interrupts are active for level sensitive interrupts only. SRAM contents are retained during Power-down mode, the minimum V_{DD} level is 2.0 V.

The device exits Power-down mode through either an enabled external level sensitive interrupt or a hardware reset. The start of the interrupt clears the PD bit and exits Power-down. Holding the external interrupt pin low restarts the oscillator, the signal must hold low at least 1024 clock cycles before bringing back high to complete the exit. Upon interrupt signal restored to logic V_{IH}, the interrupt service routine program execution resumes beginning at the instruction immediately following the instruction which invoked Power-down mode. A hardware reset starts the device similar to power-on reset.

To exit properly out of Power-down mode, the reset or external interrupt should not be executed before the V_{DD} line is restored to its normal operating voltage. Be sure to hold V_{DD} voltage long enough at its normal operating level for the oscillator to restart and stabilize (normally less than 10 ms).

Table 56. Power-saving modes

Mode	Initiated by	State of MCU	Exited by
Idle mode	Software (Set IDL bit in PCON) MOV PCON, #01H	CLK is running. Interrupts, serial port and timers/counters are active. Program Counter is stopped. ALE and $\overline{PSEN}$ signals at a HIGH level during Idle. All registers remain unchanged.	Enabled interrupt or hardware reset. Start of interrupt clears IDL bit and exits Idle mode, after the ISR RETI instruction, program resumes execution beginning at the instruction following the one that invoked Idle mode. A user could consider placing two or three NOP instructions after the instruction that invokes Idle mode to eliminate any problems. A hardware reset restarts the device similar to a power-on reset.
Power-down mode	Software (Set PD bit in PCON) MOV PCON, #02H	CLK is stopped. On-chip SRAM and SFR data is maintained. ALE and $\overline{PSEN}$ signals at a LOW level during power -down. External Interrupts are only active for level sensitive interrupts, if enabled.	Enabled external level sensitive interrupt or hardware reset. Start of interrupt clears PD bit and exits Power-down mode, after the ISR RETI instruction program resumes execution beginning at the instruction following the one that invoked Power-down mode. A user could consider placing two or three NOP instructions after the instruction that invokes Power-down mode to eliminate any problems. A hardware reset restarts the device similar to a power-on reset.

© NXP B.V. 2009. All rights reserved.

Downloaded from Arrow.com.

6.13 System clock and clock options

6.13.1 Clock input options and recommended capacitor values for oscillator

Shown in Figure 28 and Figure 29 are the input and output of an internal inverting amplifier (XTAL1, XTAL2), which can be configured for use as an on-chip oscillator.

When driving the device from an external clock source, XTAL2 should be left disconnected and XTAL1 should be driven.

At start-up, the external oscillator may encounter a higher capacitive load at XTAL1 due to interaction between the amplifier and its feedback capacitance. However, the capacitance will not exceed 15 pF once the external signal meets the V_{IL} and V_{IH} specifications.

Crystal manufacturer, supply voltage, and other factors may cause circuit performance to differ from one application to another. C1 and C2 should be adjusted appropriately for each design. Table 57 shows the typical values for C1 and C2 vs. crystal type for various frequencies.

Table 57. Recommended values for C1 and C2 by crystal type

Crystal	C1 = C2
Quartz	20 pF to 30 pF
Ceramic	40 pF to 50 pF

More specific information about on-chip oscillator design can be found in the *FlashFlex51 Oscillator Circuit Design Considerations* application note.

6.13.2 Clock doubling option

By default, the device runs at 12 clocks per machine cycle (X1 mode). The device has a clock doubling option to speed up to 6 clocks per machine cycle (please see Table 58). Clock double mode can be enabled either by an external programmer or using IAP. When set, the EDC bit in FST register will indicate 6-clock mode.

The clock double mode is only for doubling the internal system clock and the internal flash memory, i.e. $\overline{EA}$ = 1. To access the external memory and the peripheral devices, careful consideration must be taken. Also note that the crystal output (XTAL2) will not be doubled.

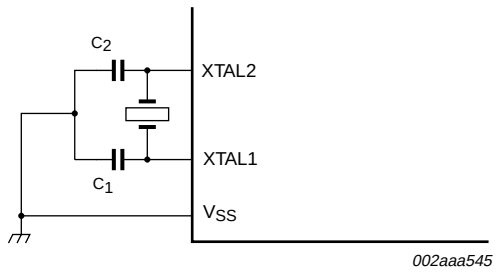

Fig 28. Oscillator characteristics (using the on-chip oscillator)

© NXP B.V. 2009. All rights reserved.

Downloaded from Arrow.com.

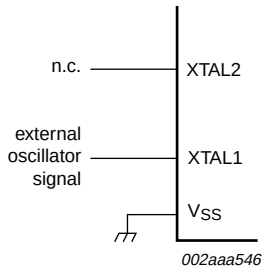

Fig 29. Oscillator characteristics (external clock drive)

Table 58. Clock doubling features

Device	Standard mode (X1)		Clock double mode (X2)	
	Clocks per machine cycle	Max. external clock frequency (MHz)	Clocks per machine cycle	Max. external clock frequency (MHz)
P89V51RD2	12	40	6	20

Table 59. FST - Flash status register (address B6) bit allocation

Not Bit addressable; Reset value: xxxx x0xxB

Bit	7	6	5	4	3	2	1	0
Symbol	-	SB	-	-	EDC	-	-	-

Table 60. FST - Flash status register (address B6) bit description

Bit	Symbol	Description
7	-	Reserved for future use. Should be set to ‘0’ by user programs.
6	SB	Security bit.
5 to 4	-	Reserved for future use. Should be set to ‘0’ by user programs.
3	EDC	Enable double clock.
2 to 0	-	Reserved for future use. Should be set to ‘0’ by user programs.

© NXP B.V. 2009. All rights reserved.

Downloaded from Arrow.com.

7. Limiting values

Table 61. Limiting values

In accordance with the Absolute Maximum Rating System (IEC 60134).
Parameters are valid over operating temperature range unless otherwise specified. All voltages are with respect to V_{SS} unless otherwise noted.

Symbol	Parameter	Conditions	Min	Max	Unit
$T_{amb(bias)}$	bias ambient temperature		–55	+125	°C
T_{stg}	storage temperature		–65	+150	°C
V_I	input voltage	on $\overline{EA}$ pin to V_{SS}	–0.5	+14	V
V_n	voltage on any other pin	except V_{SS}; with respect to V_{DD}	–0.5	V_{DD} + 0.5	V
$I_{OL(I/O)}$	LOW-level output current per input/output pin	pins P1.5, P1.6, P1.7	-	20	mA
		all other pins	-	15	mA
$P_{tot(pack)}$	total power dissipation (per package)	based on package heat transfer, not device power consumption	-	1.5	W

8. Static characteristics

Table 62. Static characteristics

T_a = 0 °C to +70 °C or –40 °C to +85 °C; V_{DD} = 4.5 V to 5.5 V; V_{SS} = 0 V

Symbol	Parameter	Conditions		Min	Typ	Max	Unit
$n_{endu(fl)}$	endurance of flash memory	JEDEC Standard A117	[1]	10000	-	-	cycles
$t_{ret(fl)}$	flash memory retention time	JEDEC Standard A103	[1]	100	-	-	years
I_{latch}	I/O latch-up current	JEDEC Standard 78	[1]	100 + I_{DD}	-	-	mA
$V_{th(HL)}$	HIGH-LOW threshold voltage	4.5 V < V_{DD} < 5.5 V		–0.5	-	0.2V_{DD} – 0.1	V
$V_{th(LH)}$	LOW-HIGH threshold voltage	except XTAL1, RST		0.2V_{DD} + 0.9	-	V_{DD} + 0.5	V
V_{IH}	HIGH-level input voltage	4.5 V < V_{DD} < 5.5 V; XTAL1, RST		0.7V_{DD}	-	6.0	V
V_{OL}	LOW-level output voltage	V_{DD} = 4.5 V; ports 1, 2, 3, except $\overline{PSEN}$, ALE	[2][3][4]				
		I_{OL} = 100 µA		-	-	0.3	V
		I_{OL} = 1.6 mA		-	-	0.45	V
		I_{OL} = 3.5 mA		-	-	1.0	V
		V_{DD} = 4.5 V; port 0, $\overline{PSEN}$, ALE					
		I_{OL} = 200 µA		-	-	0.3	V
		I_{OL} = 3.2 mA		-	-	0.45	V

© NXP B.V. 2009. All rights reserved.

Downloaded from Arrow.com.

Table 62. Static characteristics *...continued*

T_a = 0 °C to +70 °C or –40 °C to +85 °C; V_{DD} = 4.5 V to 5.5 V; V_{SS} = 0 V

Symbol	Parameter	Conditions		Min	Typ	Max	Unit
V_{OH}	HIGH-level output voltage	V_{DD} = 4.5 V; ports 1, 2, 3, ALE, $\overline{PSEN}$	[5]				
		I_{OH} = –10 µA		V_{DD} – 0.3	-	-	V
		I_{OH} = –30 µA		V_{DD} – 0.7	-	-	V
		I_{OH} = –60 µA		V_{DD} – 1.5	-	-	V
		V_{DD} = 4.5 V; port 0 in External Bus mode					
		I_{OH} = –200 µA		V_{DD} – 0.3	-	-	V
		I_{OH} = –3.2 mA		V_{DD} – 0.7	-	-	V
V_{bo}	brownout trip voltage			3.85	-	4.15	V
I_{IL}	LOW-level input current	V_I = 0.4 V; ports 1, 2, 3		-	-	–75	µA
I_{THL}	HIGH-LOW transition current	V_I = 2 V; ports 1, 2, 3	[6]	-	-	–650	µA
I_{LI}	input leakage current	0.45 V < V_I < V_{DD} – 0.3 V; port 0		-	-	±10	µA
R_{pd}	pull-down resistance	on pin RST		40	-	225	kΩ
C_{iss}	input capacitance	1 MHz; T_a = 25 °C; V_I = 0 V	[7]	-	-	15	pF
$I_{DD(oper)}$	operating supply current	f_{osc} = 12 MHz		-	-	23	mA
		f_{osc} = 40 MHz		-	-	50	mA
$I_{DD(idle)}$	Idle mode supply current	f_{osc} = 12 MHz		-	-	20	mA
		f_{osc} = 40 MHz		-	-	42	mA
$I_{DD(pd)}$	Power-down mode supply current	minimum V_{DD} = 2 V					
		T_a = 0 °C to +70 °C		-	-	80	µA
		T_a = –40 °C to +85 °C		-	-	90	µA

[1] This parameter is measured only for initial qualification and after a design or process change that could affect this parameter.

[2] Under steady state (non-transient) conditions, I_{OL} must be externally limited as follows:

a) Maximum I_{OL} per 8-bit port: 26 mA

b) Maximum I_{OL} total for all outputs: 71 mA

c) If I_{OL} exceeds the test condition, V_{OH} may exceed the related specification. Pins are not guaranteed to sink current greater than the listed test conditions.

[3] Capacitive loading on Ports 0 and 2 may cause spurious noise to be superimposed on the V_{OL} of ALE and Ports 1 and 3. The noise due to external bus capacitance discharging into the Port 0 and 2 pins when the pins make 1-to-0 transitions during bus operations. In the worst cases (capacitive loading > 100 pF), the noise pulse on the ALE pin may exceed 0.8 V. In such cases, it may be desirable to qualify ALE with a Schmitt trigger, or use an address latch with a Schmitt trigger STROBE input.

[4] Load capacitance for Port 0, ALE and $\overline{PSEN}$ = 100 pF, load capacitance for all other outputs = 80 pF.

[5] Capacitive loading on Ports 0 and 2 may cause the V_{OH} on ALE and $\overline{PSEN}$ to momentarily fall below the V_{DD} – 0.7 V specification when the address bits are stabilizing.

[6] Pins of Ports 1, 2 and 3 source a transition current when they are being externally driven from 1 to 0. The transition current reaches its maximum value when V_I is approximately 2 V.

[7] Pin capacitance is characterized but not tested. $\overline{EA}$ = 25 pF (max).

© NXP B.V. 2009. All rights reserved.

Downloaded from Arrow.com.

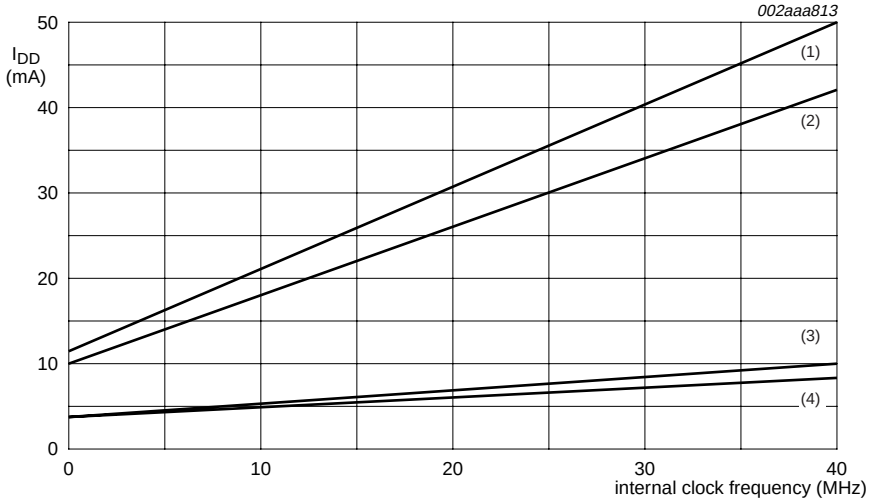

(1) Maximum active I_{DD}

(2) Maximum idle I_{DD}

(3) Typical active I_{DD}

(4) Typical idle I_{DD}

Fig 30. I_{DD} vs. frequency

© NXP B.V. 2009. All rights reserved.

Downloaded from Arrow.com.

9. Dynamic characteristics

Table 63. Dynamic characteristics

Over operating conditions: load capacitance for Port 0, ALE, and $\overline{PSEN}$ = 100 pF; load capacitance for all other outputs = 80 pF

T_a = 0 °C to +70 °C or −40 °C to +85 °C; V_{DD} = 4.5 V to 5.5 V; V_{SS} = 0 V[1][2]

Symbol	Parameter	Conditions	Min	Typ	Max	Unit
f_{osc}	oscillator frequency	X1 mode	0	-	40	MHz
		X2 mode	0	-	20	MHz
		IAP	0.25	-	40	MHz
t_{LHLL}	ALE pulse width		$2T_{cy(clk)} - 15$	-	-	ns
t_{AVLL}	address valid to ALE LOW time		$T_{cy(clk)} - 15$	-	-	ns
t_{LLAX}	address hold after ALE LOW time		$T_{cy(clk)} - 15$	-	-	ns
t_{LLIV}	ALE LOW to valid instruction in time		-	-	$4T_{cy(clk)} - 45$	ns
t_{LLPL}	ALE LOW to $\overline{PSEN}$ LOW time		$T_{cy(clk)} - 15$	-	-	ns
t_{PLPH}	$\overline{PSEN}$ pulse width		$3T_{cy(clk)} - 15$	-	-	ns
t_{PLIV}	$\overline{PSEN}$ LOW to valid instruction in time		-	-	$3T_{cy(clk)} - 50$	ns
t_{PXIX}	input instruction hold after $\overline{PSEN}$ time		0	-	-	ns
t_{PXIZ}	input instruction float after $\overline{PSEN}$ time		-	-	$T_{cy(clk)} - 15$	ns
t_{PXAV}	$\overline{PSEN}$ to address valid time		$T_{cy(clk)} - 8$	-	-	ns
t_{AVIV}	address to valid instruction in time		-	-	$5T_{cy(clk)} - 60$	ns
t_{PLAZ}	$\overline{PSEN}$ LOW to address float time		-	-	10	ns
t_{RLRH}	$\overline{RD}$ LOW pulse width		$6T_{cy(clk)} - 30$	-	-	ns
t_{WLWH}	$\overline{WR}$ LOW pulse width		$6T_{cy(clk)} - 30$	-	-	ns
t_{RLDV}	$\overline{RD}$ LOW to valid data in time		-	-	$5T_{cy(clk)} - 50$	ns
t_{RHDX}	data hold after $\overline{RD}$ time		0	-	-	ns
t_{RHDZ}	data float after $\overline{RD}$ time		-	-	$2T_{cy(clk)} - 12$	ns
t_{LLDV}	ALE LOW to valid data in time		-	-	$8T_{cy(clk)} - 50$	ns
t_{AVDV}	address to valid data in time		-	-	$9T_{cy(clk)} - 75$	ns
t_{LLWL}	ALE LOW to $\overline{RD}$ or $\overline{WR}$ LOW time		$3T_{cy(clk)} - 15$	-	$3T_{cy(clk)} + 15$	ns
t_{AVWL}	address to $\overline{RD}$ or $\overline{WR}$ LOW time		$4T_{cy(clk)} - 30$	-	-	ns
t_{WHQX}	data hold after $\overline{WR}$ time		$T_{cy(clk)} - 20$	-	-	ns
t_{QVWH}	data output valid to $\overline{WR}$ HIGH time		$7T_{cy(clk)} - 50$	-	-	ns
t_{RLAZ}	$\overline{RD}$ LOW to address float time		-	-	0	ns
t_{WHLH}	$\overline{RD}$ or $\overline{WR}$ HIGH to ALE HIGH time		$T_{cy(clk)} - 15$	-	$T_{cy(clk)} + 15$	ns

[1] $T_{cy(clk)} = 1 / f_{osc}$.

[2] Calculated values are for 6-clock mode only.

© NXP B.V. 2009. All rights reserved.

Downloaded from Arrow.com.

9.1 Explanation of symbols

Each timing symbol has 5 characters. The first character is always a 'T' (stands for time). The other characters, depending on their positions, stand for the name of a signal or the logical status of that signal. The following is a list of all the characters and what they stand for.

A — Address

C — Clock

D — Input data

H — Logic level HIGH

I — Instruction (program memory contents)

L — Logic level LOW or ALE

P — $\overline{PSEN}$

Q — Output data

R — $\overline{RD}$ signal

T — Time

V — Valid

W — $\overline{WR}$ signal

X — No longer a valid logic level

Z — High impedance (Float)

Example:

t_{AVLL} = Address valid to ALE LOW time

t_{LLPL} = ALE LOW to $\overline{PSEN}$ LOW time

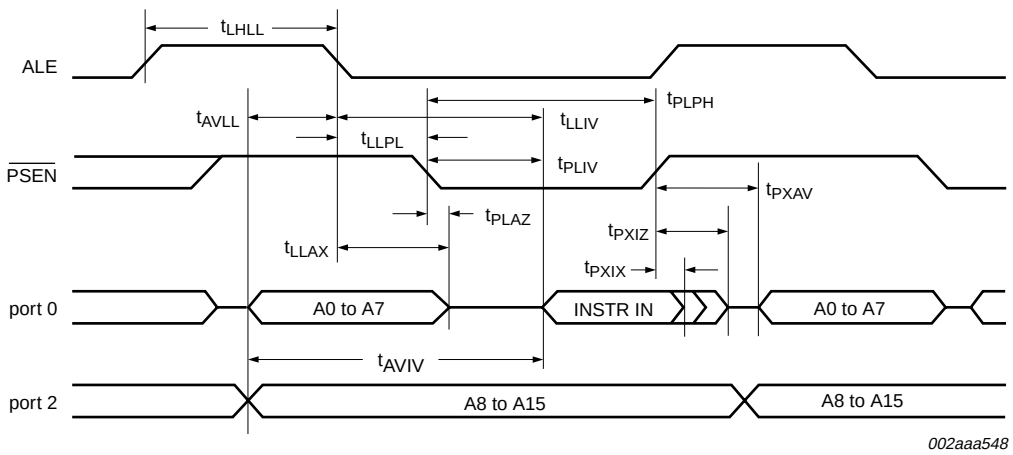

Fig 31. External program memory read cycle

© NXP B.V. 2009. All rights reserved.

Downloaded from Arrow.com.

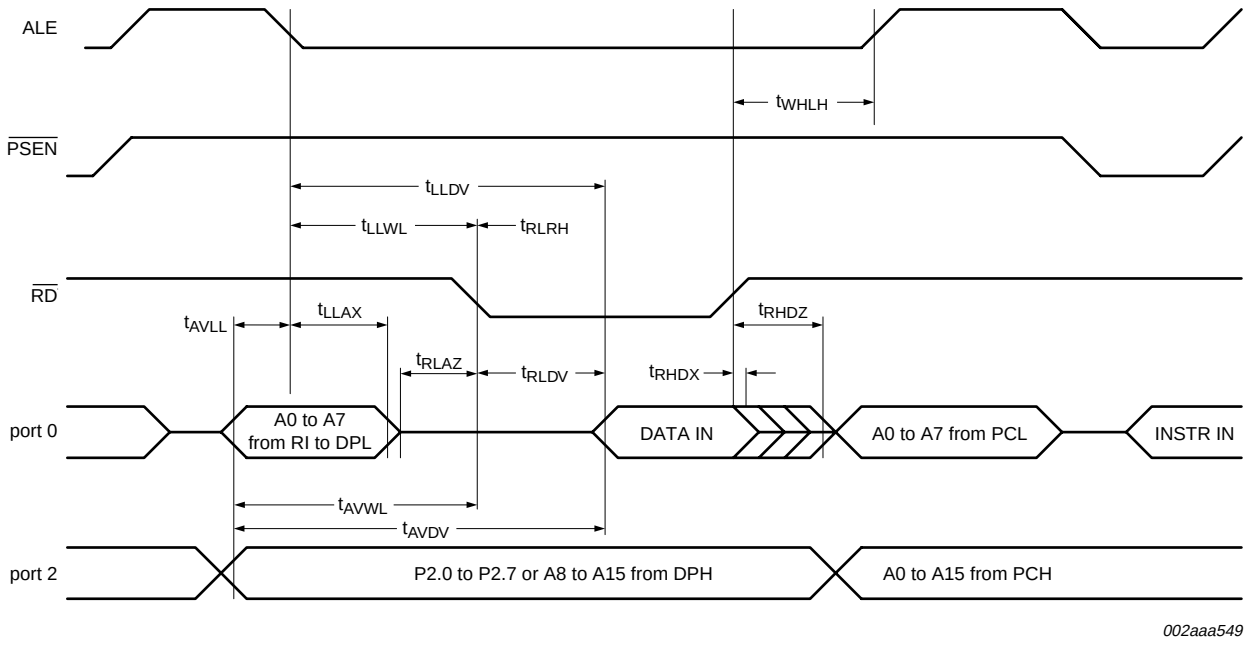

Fig 32. External data memory read cycle

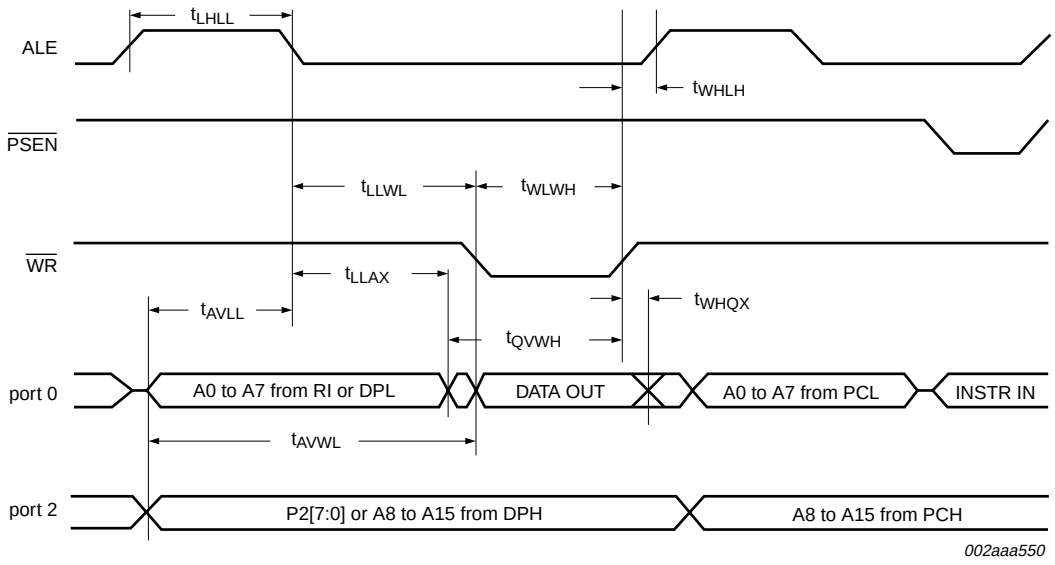

Fig 33. External data memory write cycle

© NXP B.V. 2009. All rights reserved.

Downloaded from Arrow.com.

Table 64. External clock drive

Symbol	Parameter	Oscillator				Unit
		40 MHz		Variable		
		Min	Max	Min	Max	
f_{osc}	oscillator frequency	-	-	0	40	MHz
$T_{cy(clk)}$	clock cycle time	25	-	-	-	ns
t_{CHCX}	clock HIGH time	8.75	-	$0.35T_{cy(clk)}$	$0.65T_{cy(clk)}$	ns
t_{CLCX}	clock LOW time	8.75	-	$0.35T_{cy(clk)}$	$0.65T_{cy(clk)}$	ns
t_{CLCH}	clock rise time	-	10	-	-	ns
t_{CHCL}	clock fall time	-	10	-	-	ns

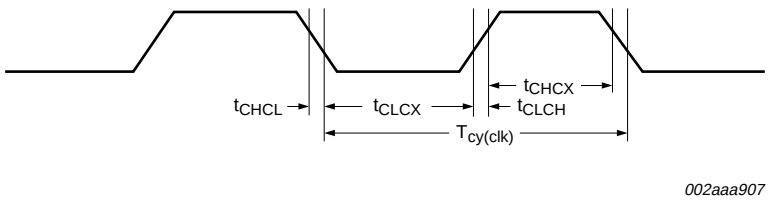

Fig 34. External clock drive waveform (with an amplitude of at least $V_{i(RMS)}$ = 200 mV)

Table 65. Serial port timing

Symbol	Parameter	Oscillator				Unit
		40 MHz		Variable		
		Min	Max	Min	Max	
T_{XLXL}	serial port clock cycle time	0.3	-	$12T_{cy(clk)}$	-	µs
t_{QVXH}	output data set-up to clock rising edge time	117	-	$10T_{cy(clk)} - 133$	-	ns
t_{XHQX}	output data hold after clock rising edge time	0	-	$2T_{cy(clk)} - 50$	-	ns
t_{XHDX}	input data hold after clock rising edge time	0	-	0	-	ns
t_{XHDV}	input data valid to clock rising edge time	-	117	-	$10T_{cy(clk)} - 133$	ns

© NXP B.V. 2009. All rights reserved.

Downloaded from Arrow.com.

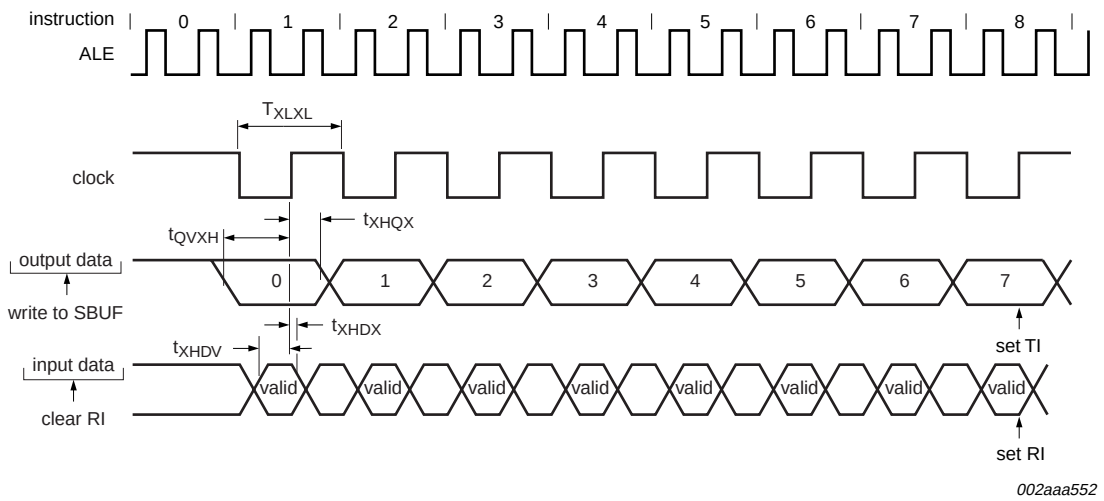

Fig 35. Shift register mode timing waveforms

Table 66. SPI interface timing

Symbol	Parameter	Conditions	Variable clock		f_{osc} = 18 MHz		Unit
			Min	Max	Min	Max	
f_{SPI}	SPI operating frequency		0	$T_{cy(clk)}$ / 4	0	10	MHz
T_{SPICYC}	SPI cycle time	see Figure 36, 37, 38, 39	$4T_{cy(clk)}$	-	222	-	ns
$t_{SPILEAD}$	SPI enable lead time	see Figure 38, 39	250	-	250	-	ns
t_{SPILAG}	SPI enable lag time	see Figure 38, 39	250	-	250	-	ns
$t_{SPICLKH}$	SPICLK HIGH time	see Figure 36, 37, 38, 39	$2T_{cy(clk)}$	-	111	-	ns
$t_{SPICLKL}$	SPICLK LOW time	see Figure 36, 37, 38, 39	$2T_{cy(clk)}$	-	111	-	ns
t_{SPIDSU}	SPI data set-up time	master or slave; see Figure 36, 37, 38, 39	100	-	100	-	ns
t_{SPIDH}	SPI data hold time	master or slave; see Figure 36, 37, 38, 39	100	-	100	-	ns
t_{SPIA}	SPI access time	see Figure 38, 39	0	80	0	80	ns
t_{SPIDIS}	SPI disable time	see Figure 38, 39	0	160	-	160	ns
t_{SPIDV}	SPI enable to output data valid time	see Figure 36, 37, 38, 39	-	111	-	111	ns
t_{SPIOH}	SPI output data hold time	see Figure 36, 37, 38, 39	0	-	0	-	ns
t_{SPIR}	SPI rise time	see Figure 36, 37, 38, 39					
	SPI outputs (SPICLK, MOSI, MISO)		-	100	-	100	ns
	SPI inputs (SPICLK, MOSI, MISO, $\overline{SS}$)		-	2000	-	2000	ns
t_{SPIF}	SPI fall time	see Figure 36, 37, 38, 39					
	SPI outputs (SPICLK, MOSI, MISO)		-	100	-	100	ns
	SPI inputs (SPICLK, MOSI, MISO, $\overline{SS}$)		-	2000	-	2000	ns

© NXP B.V. 2009. All rights reserved.

Downloaded from Arrow.com.

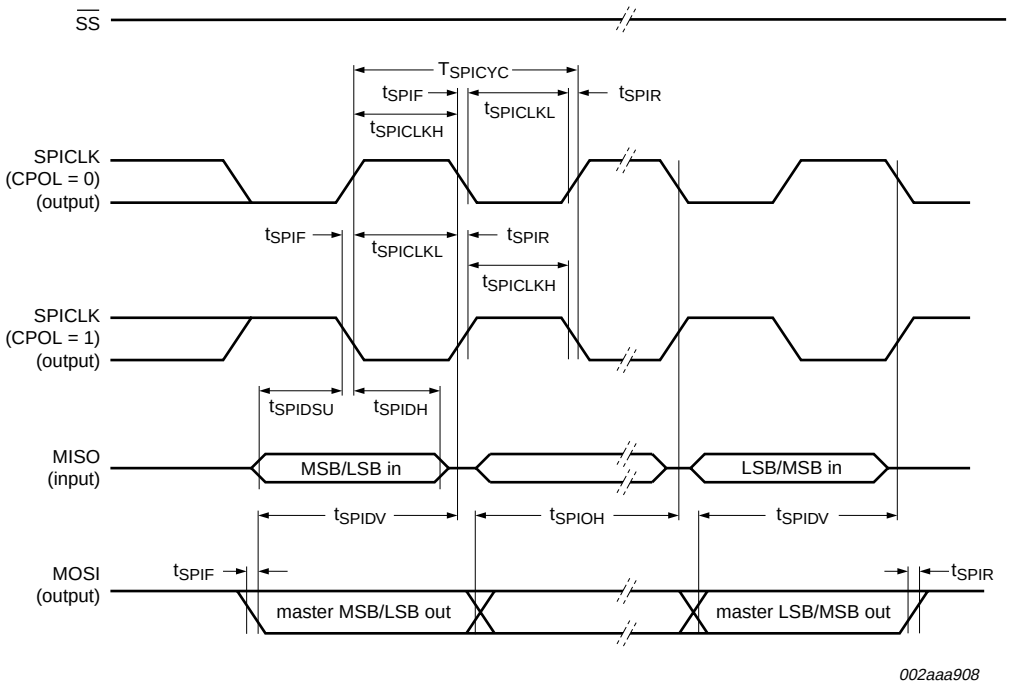

Fig 36. SPI master timing (CPHA = 0)

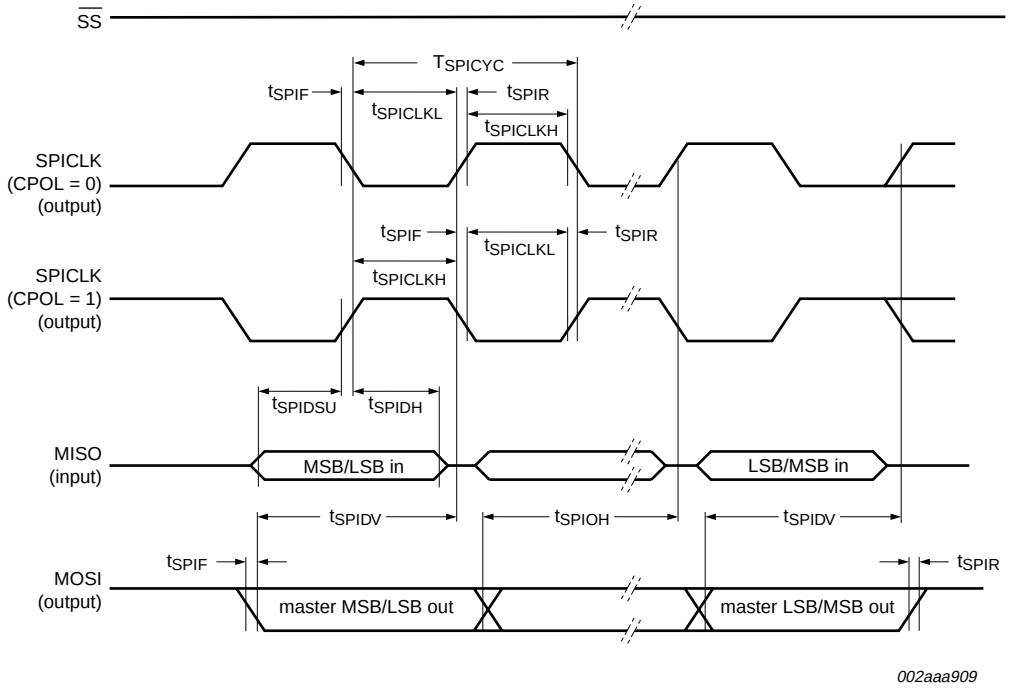

Fig 37. SPI master timing (CPHA = 1)

© NXP B.V. 2009. All rights reserved.

Downloaded from Arrow.com.

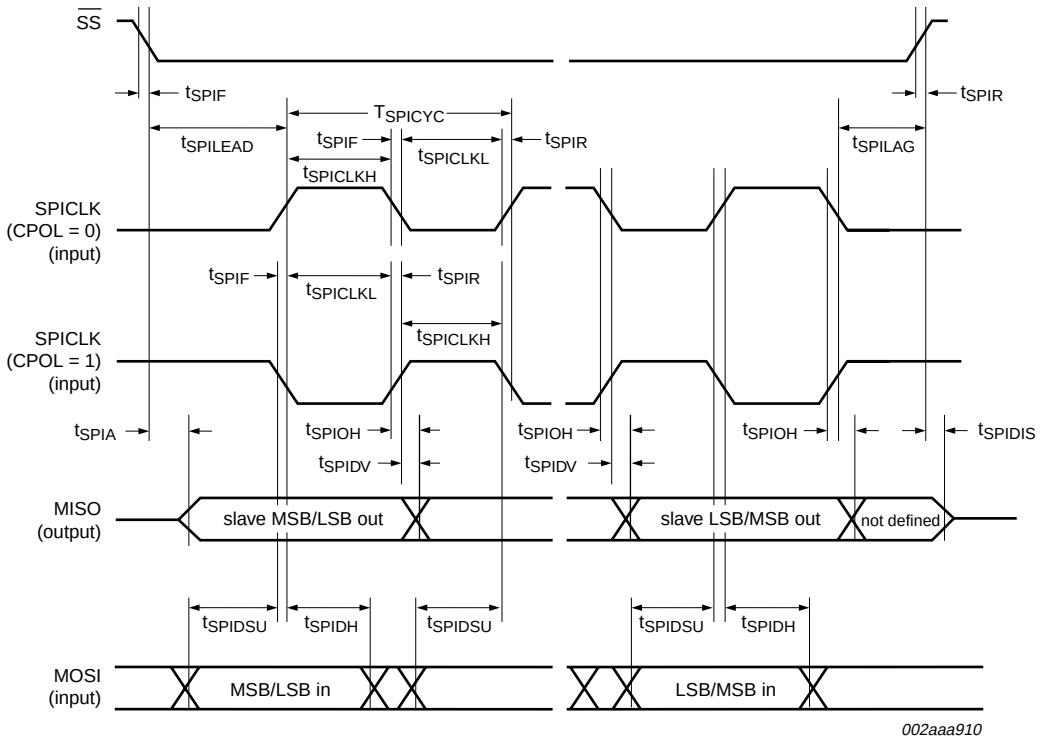

Fig 38. SPI slave timing (CPHA = 0)

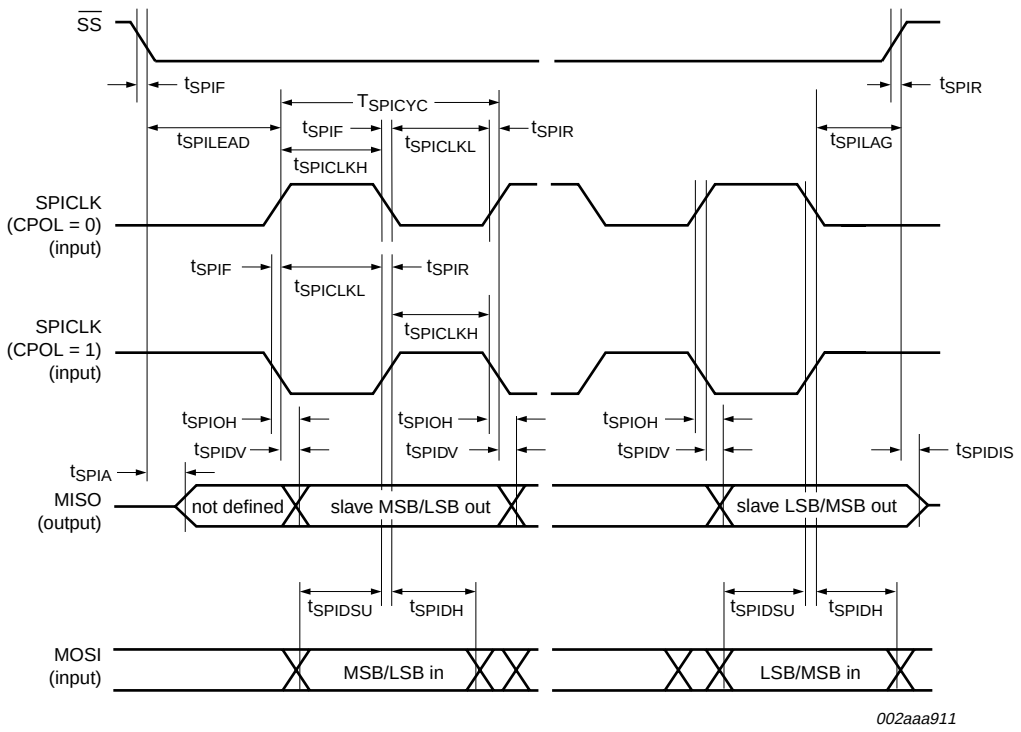

Fig 39. SPI slave timing (CPHA = 1)

© NXP B.V. 2009. All rights reserved.

Downloaded from Arrow.com.

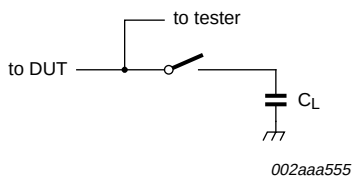

Fig 40. Test load example

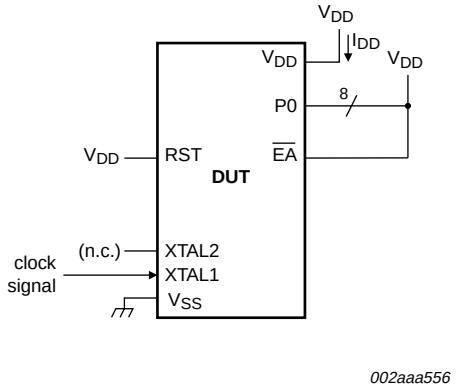

All other pins disconnected

Fig 41. I_{DD} test condition, Active mode

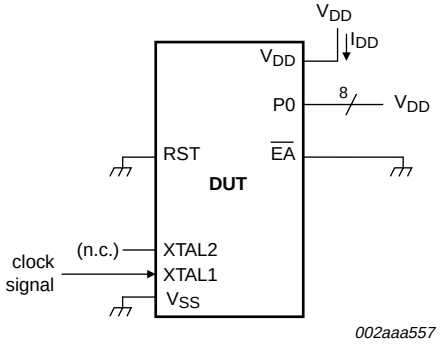

All other pins disconnected

Fig 42. I_{DD} test condition, Idle mode

© NXP B.V. 2009. All rights reserved.

Downloaded from Arrow.com.

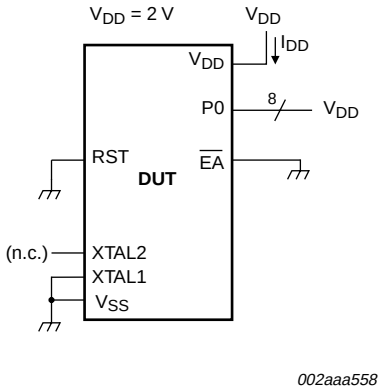

All other pins disconnected

Fig 43. I_{DD} test condition, Power-down mode

© NXP B.V. 2009. All rights reserved.

Downloaded from Arrow.com.

10. Package outline

DIP40: plastic dual in-line package; 40 leads (600 mil) **SOT129-1**

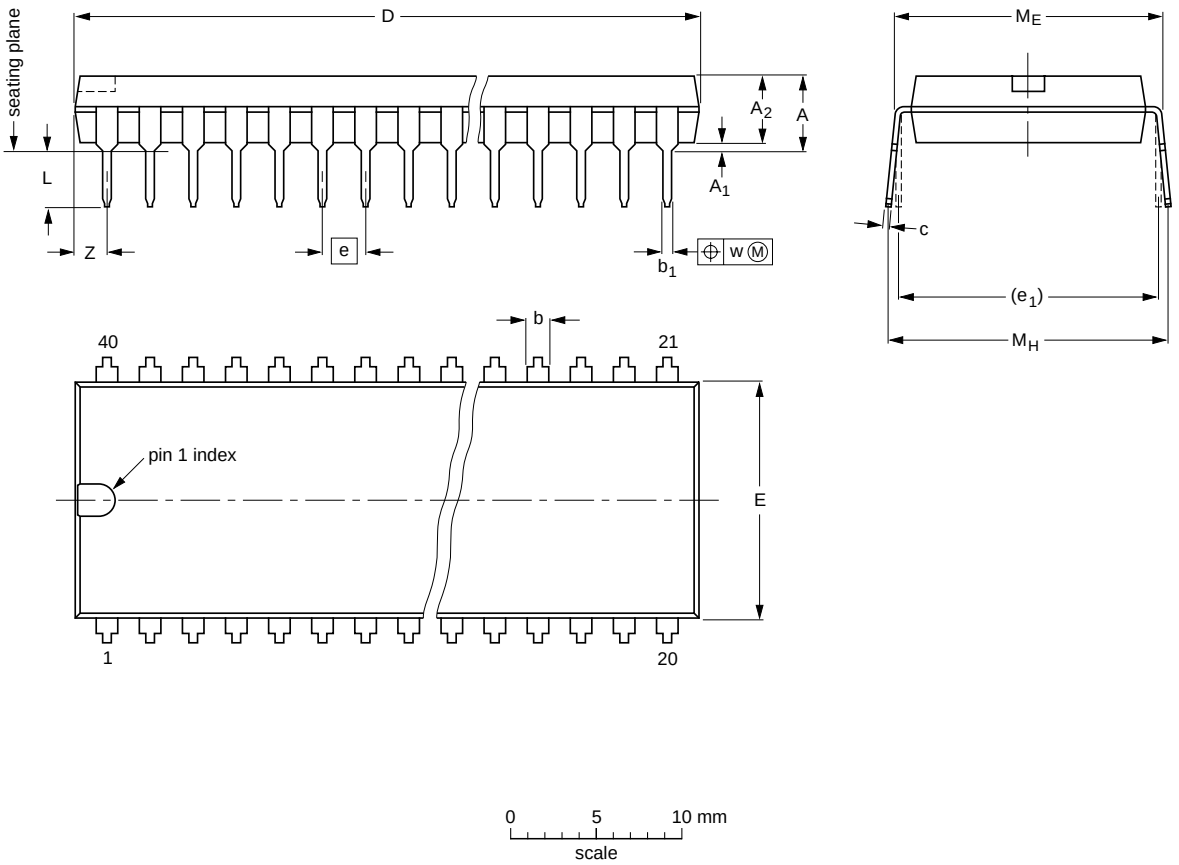

DIMENSIONS (inch dimensions are derived from the original mm dimensions)

UNIT	A max.	A_1 min.	A_2 max.	b	b_1	c	D (1)	E (1)	e	e_1	L	M_E	M_H	w	Z (1) max.
mm	4.7	0.51	4	1.70 1.14	0.53 0.38	0.36 0.23	52.5 51.5	14.1 13.7	2.54	15.24	3.60 3.05	15.80 15.24	17.42 15.90	0.254	2.25
inches	0.19	0.02	0.16	0.067 0.045	0.021 0.015	0.014 0.009	2.067 2.028	0.56 0.54	0.1	0.6	0.14 0.12	0.62 0.60	0.69 0.63	0.01	0.089

Note

1. Plastic or metal protrusions of 0.25 mm (0.01 inch) maximum per side are not included.

OUTLINE VERSION	REFERENCES				EUROPEAN PROJECTION	ISSUE DATE
	IEC	JEDEC	JEITA			
SOT129-1	051G08	MO-015	SC-511-40			~~99-12-27~~ 03-02-13

Fig 44. SOT129-1 (DIP40) package outline

© NXP B.V. 2009. All rights reserved.

Downloaded from Arrow.com.

TQFP44: plastic thin quad flat package; 44 leads; body 10 x 10 x 1.0 mm **SOT376-1**

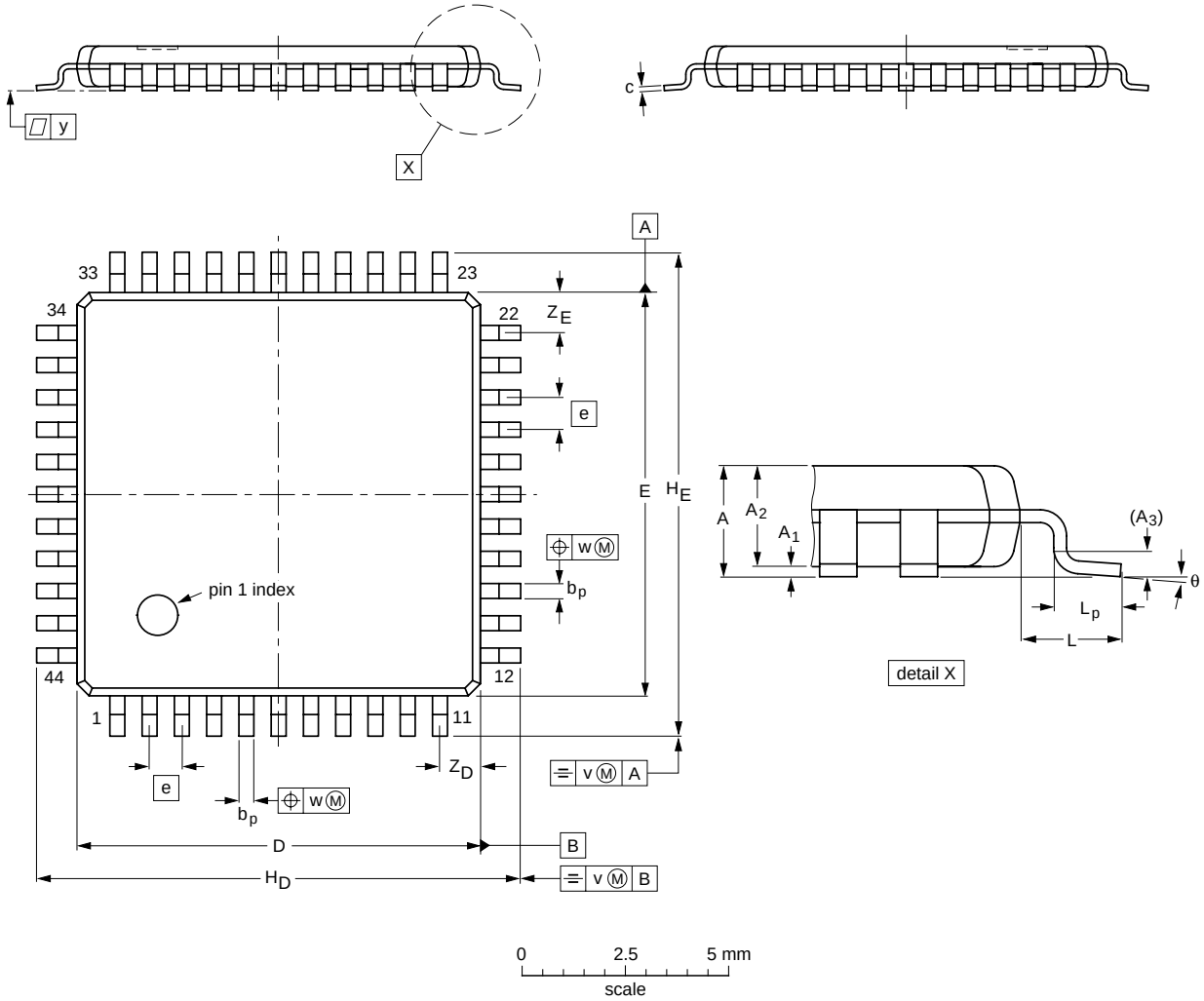

DIMENSIONS (mm are the original dimensions)

UNIT	A max.	A_1	A_2	A_3	b_p	c	D(1)	E(1)	e	H_D	H_E	L	L_p	v	w	y	Z_D(1)	Z_E(1)	θ
mm	1.2	0.15 0.05	1.05 0.95	0.25	0.45 0.30	0.18 0.12	10.1 9.9	10.1 9.9	0.8	12.15 11.85	12.15 11.85	1	0.75 0.45	0.2	0.2	0.1	1.2 0.8	1.2 0.8	7° 0°

Note

1. Plastic or metal protrusions of 0.25 mm maximum per side are not included.

OUTLINE VERSION	REFERENCES				EUROPEAN PROJECTION	ISSUE DATE
	IEC	JEDEC	JEITA			
SOT376-1	137E08	MS-026				~~00-01-19~~ 02-03-14

Fig 45. SOT376-1 (TQFP44) package outline

© NXP B.V. 2009. All rights reserved.

Downloaded from Arrow.com.

PLCC44: plastic leaded chip carrier; 44 leads **SOT187-2**

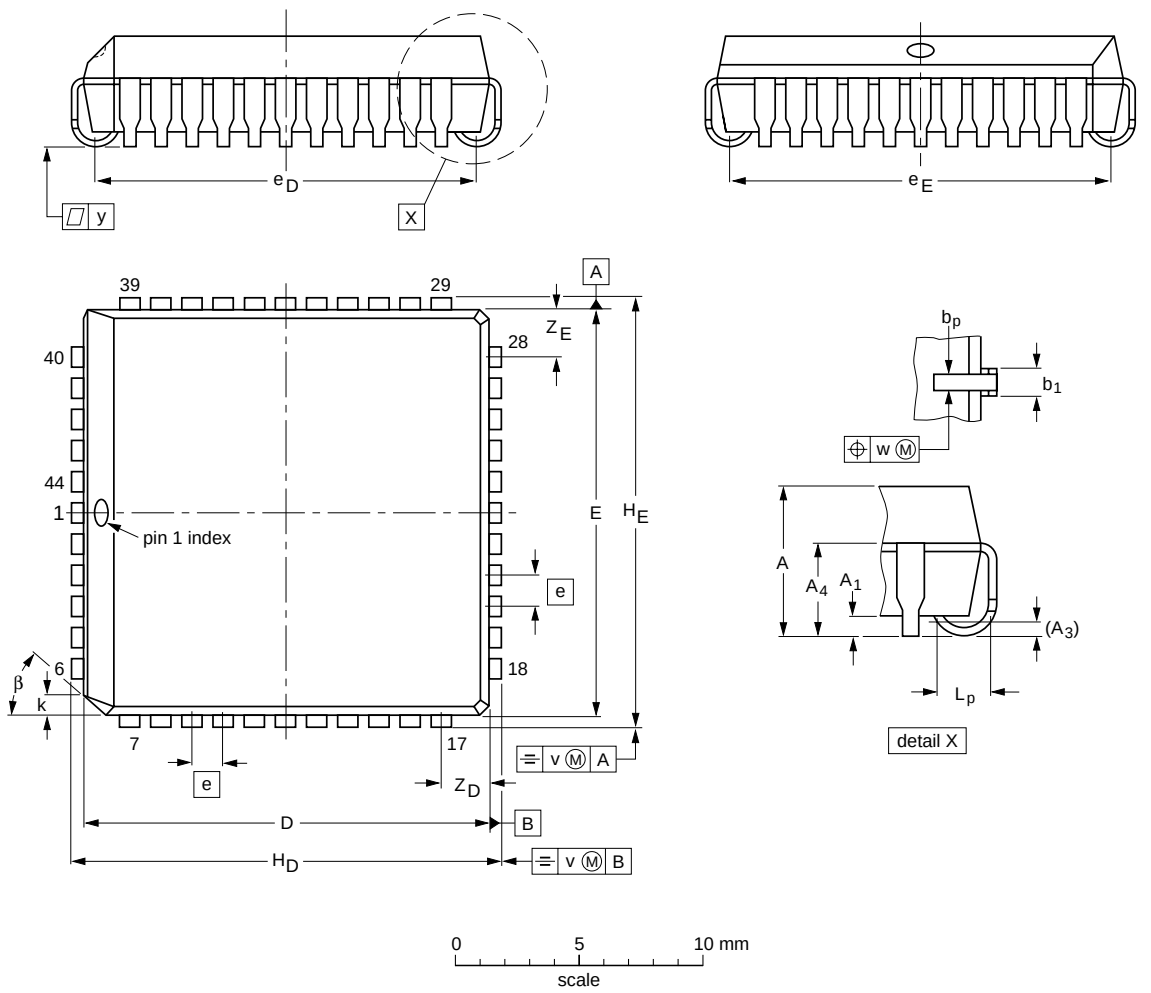

DIMENSIONS (mm dimensions are derived from the original inch dimensions)

UNIT	A	A_1 min.	A_3	A_4 max.	b_p	b_1	D(1)	E(1)	e	e_D	e_E	H_D	H_E	k	L_p	v	w	y	Z_D(1) max.	Z_E(1) max.	β
mm	4.57 4.19	0.51	0.25	3.05	0.53 0.33	0.81 0.66	16.66 16.51	16.66 16.51	1.27	16.00 14.99	16.00 14.99	17.65 17.40	17.65 17.40	1.22 1.07	1.44 1.02	0.18	0.18	0.1	2.16	2.16	45°
inches	0.180 0.165	0.02	0.01	0.12	0.021 0.013	0.032 0.026	0.656 0.650	0.656 0.650	0.05	0.63 0.59	0.63 0.59	0.695 0.685	0.695 0.685	0.048 0.042	0.057 0.040	0.007	0.007	0.004	0.085	0.085	

Note

1. Plastic or metal protrusions of 0.25 mm (0.01 inch) maximum per side are not included.

OUTLINE VERSION	REFERENCES				EUROPEAN PROJECTION	ISSUE DATE
	IEC	JEDEC	JEITA			
SOT187-2	112E10	MS-018	EDR-7319			~~99-12-27~~ 01-11-14

Fig 46. SOT187-2 (PLCC44) package outline

© NXP B.V. 2009. All rights reserved.

Downloaded from Arrow.com.

11. Abbreviations

Table 67. Abbreviations

Acronym	Description
DUT	Device Under Test
EMI	Electro-Magnetic Interference
IAP	In-Application Programming
ISP	In-System Programming
MCU	Microcontroller Unit
PCA	Programmable Counter Array
PWM	Pulse Width Modulator
RC	Resistance-Capacitance
SFR	Special Function Register
SPI	Serial Peripheral Interface
TTL	Transistor-Transistor Logic
UART	Universal Asynchronous Receiver/Transmitter

© NXP B.V. 2009. All rights reserved.

Downloaded from Arrow.com.

12. Revision history

Table 68. Revision history

Document ID	Release date	Data sheet status	Change notice	Supersedes
P89V51RB2_RC2_RD2_5	20091112	Product data sheet	-	P89V51RB2_RC2_RD2_4
Modifications:	• Table 37: Changed 2nd row, f_{osc} / 6 to f_{osc} / 2. • Table 62: Changed 12 MHz max values for $I_{DD(oper)}$ and $I_{DD(idle)}$. • Table 3: Removed sentence “However, Security lock level 4 will disable $\overline{EA}$...” from $\overline{EA}$ pin description. • Changed SCK to SPICLK throughout data sheet. • Table 3: Changed SCK to SPICLK and updated pin description.			
P89V51RB2_RC2_RD2_4	20070501	Product data sheet	-	P89V51RB2_RC2_RD2-03
P89V51RB2_RC2_RD2-03	20041202	Product data	-	P89V51RB2_RC2_RD2-02
P89V51RD2-02	20041011	Product data	-	P89V51RD2-01
P89V51RD2-01	20040301	Product data	-	-

© NXP B.V. 2009. All rights reserved.

Downloaded from Arrow.com.

13. Legal information

13.1 Data sheet status

Document status[1][2]	Product status[3]	Definition
Objective [short] data sheet	Development	This document contains data from the objective specification for product development.
Preliminary [short] data sheet	Qualification	This document contains data from the preliminary specification.
Product [short] data sheet	Production	This document contains the product specification.

[1] Please consult the most recently issued document before initiating or completing a design.

[2] The term 'short data sheet' is explained in section "Definitions".

[3] The product status of device(s) described in this document may have changed since this document was published and may differ in case of multiple devices. The latest product status information is available on the Internet at URL http://www.nxp.com.

13.2 Definitions

Draft — The document is a draft version only. The content is still under internal review and subject to formal approval, which may result in modifications or additions. NXP Semiconductors does not give any representations or warranties as to the accuracy or completeness of information included herein and shall have no liability for the consequences of use of such information.

Short data sheet — A short data sheet is an extract from a full data sheet with the same product type number(s) and title. A short data sheet is intended for quick reference only and should not be relied upon to contain detailed and full information. For detailed and full information see the relevant full data sheet, which is available on request via the local NXP Semiconductors sales office. In case of any inconsistency or conflict with the short data sheet, the full data sheet shall prevail.

13.3 Disclaimers

General — Information in this document is believed to be accurate and reliable. However, NXP Semiconductors does not give any representations or warranties, expressed or implied, as to the accuracy or completeness of such information and shall have no liability for the consequences of use of such information.

Right to make changes — NXP Semiconductors reserves the right to make changes to information published in this document, including without limitation specifications and product descriptions, at any time and without notice. This document supersedes and replaces all information supplied prior to the publication hereof.

Suitability for use — NXP Semiconductors products are not designed, authorized or warranted to be suitable for use in medical, military, aircraft, space or life support equipment, nor in applications where failure or malfunction of an NXP Semiconductors product can reasonably be expected to result in personal injury, death or severe property or environmental damage. NXP Semiconductors accepts no liability for inclusion and/or use of NXP Semiconductors products in such equipment or applications and therefore such inclusion and/or use is at the customer's own risk.

Applications — Applications that are described herein for any of these products are for illustrative purposes only. NXP Semiconductors makes no representation or warranty that such applications will be suitable for the specified use without further testing or modification.

Limiting values — Stress above one or more limiting values (as defined in the Absolute Maximum Ratings System of IEC 60134) may cause permanent damage to the device. Limiting values are stress ratings only and operation of the device at these or any other conditions above those given in the Characteristics sections of this document is not implied. Exposure to limiting values for extended periods may affect device reliability.

Terms and conditions of sale — NXP Semiconductors products are sold subject to the general terms and conditions of commercial sale, as published at http://www.nxp.com/profile/terms, including those pertaining to warranty, intellectual property rights infringement and limitation of liability, unless explicitly otherwise agreed to in writing by NXP Semiconductors. In case of any inconsistency or conflict between information in this document and such terms and conditions, the latter will prevail.

No offer to sell or license — Nothing in this document may be interpreted or construed as an offer to sell products that is open for acceptance or the grant, conveyance or implication of any license under any copyrights, patents or other industrial or intellectual property rights.

Export control — This document as well as the item(s) described herein may be subject to export control regulations. Export might require a prior authorization from national authorities.

13.4 Trademarks

Notice: All referenced brands, product names, service names and trademarks are the property of their respective owners.

14. Contact information

For more information, please visit: **http://www.nxp.com**

For sales office addresses, please send an email to: **salesaddresses@nxp.com**

© NXP B.V. 2009. All rights reserved.

Downloaded from Arrow.com.

15. Contents

1 General description . . . 1
2 Features . . . 1
3 Ordering information . . . 2
3.1 Ordering options . . . 2
4 Block diagram . . . 3
5 Pinning information . . . 4
5.1 Pinning . . . 4
5.2 Pin description . . . 6
6 Functional description . . . 10
6.1 Special function registers . . . 10
6.2 Memory organization . . . 14
6.2.1 Flash program memory bank selection . . . 14
6.2.2 Power-on reset code execution . . . 14
6.2.3 Software reset . . . 15
6.2.4 Brownout detect reset . . . 15
6.2.5 Watchdog reset . . . 16
6.2.6 Data RAM memory . . . 16
6.2.7 Expanded data RAM addressing . . . 16
6.2.8 Dual data pointers . . . 19
6.3 Flash memory IAP . . . 20
6.3.1 Flash organization . . . 20
6.3.2 Boot block (block 1) . . . 20
6.3.3 ISP . . . 21
6.3.4 Using ISP . . . 21
6.3.5 Using the serial number . . . 25
6.3.6 IAP method . . . 25
6.4 Timers/counters 0 and 1 . . . 27
6.4.1 Mode 0 . . . 29
6.4.2 Mode 1 . . . 29
6.4.3 Mode 2 . . . 30
6.4.4 Mode 3 . . . 30
6.5 Timer 2 . . . 31
6.5.1 Capture mode . . . 32
6.5.2 Auto-reload mode (up or down counter) . . . 33
6.5.3 Programmable clock-out . . . 35
6.5.4 Baud rate generator mode . . . 35
6.5.5 Summary of baud rate equations . . . 37
6.6 UARTs . . . 37
6.6.1 Mode 0 . . . 37
6.6.2 Mode 1 . . . 38
6.6.3 Mode 2 . . . 38
6.6.4 Mode 3 . . . 38
6.6.5 Framing error . . . 39
6.6.6 More about UART mode 1 . . . 39
6.6.7 More about UART modes 2 and 3 . . . 39
6.6.8 Multiprocessor communications . . . 40
6.6.9 Automatic address recognition . . . 40
6.7 SPI . . . 42
6.7.1 SPI features . . . 42
6.7.2 SPI description . . . 42
6.8 Watchdog timer . . . 45
6.9 PCA . . . 46
6.9.1 PCA capture mode . . . 50
6.9.2 16-bit software timer mode . . . 51
6.9.3 High-speed output mode . . . 52
6.9.4 PWM mode . . . 53
6.9.5 PCA watchdog timer . . . 54
6.10 Security bit . . . 55
6.11 Interrupt priority and polling sequence . . . 55
6.12 Power-saving modes . . . 58
6.12.1 Idle mode . . . 58
6.12.2 Power-down mode . . . 59
6.13 System clock and clock options . . . 60
6.13.1 Clock input options and recommended capacitor values for oscillator . . . 60
6.13.2 Clock doubling option . . . 60
7 Limiting values . . . 62
8 Static characteristics . . . 62
9 Dynamic characteristics . . . 65
9.1 Explanation of symbols . . . 66
10 Package outline . . . 74
11 Abbreviations . . . 77
12 Revision history . . . 78
13 Legal information . . . 79
13.1 Data sheet status . . . 79
13.2 Definitions . . . 79
13.3 Disclaimers . . . 79
13.4 Trademarks . . . 79
14 Contact information . . . 79
15 Contents . . . 80

Please be aware that important notices concerning this document and the product(s) described herein, have been included in section 'Legal information'.

founded by PHILIPS

© NXP B.V. 2009. All rights reserved.

For more information, please visit: http://www.nxp.com
For sales office addresses, please send an email to: salesaddresses@nxp.com

Date of release: 12 November 2009
Document identifier: P89V51RB2_RC2_RD2_5

Downloaded from Arrow.com.