207609-1 Product Details

Live Product Chat

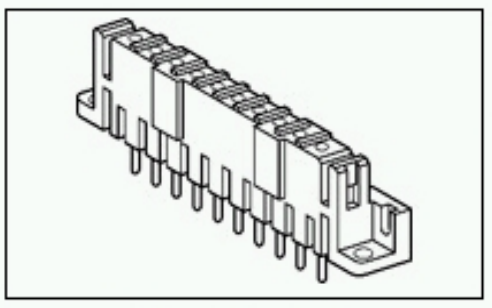

207609-1

TE Part Number: 207609-1
Active
Add to Part List

5mm (.197") Centerline, 600 V, 14 A max. (Metrimate)

Not EU RoHS or ELV Compliant (Find RoHS Compliant Alternates)

Product Highlights:
- Header
- In-Line Connector Configuration
- Number of Positions = 3
- Socket
- Without Coaxial Socket

View all Features | Find Similar Products

Quick Links
- Check Pricing & Availability
- Search for Tooling
- Product Feature Selector
- Contact Us About This Product
- Request Samples NEW!

Documentation & Additional Information

Product Drawings:
- SOCKET HEADER ASSEMBLY, 3 POSN, IN-LINE, METRIMATE (PDF, English)

Catalog Pages/Data Sheets:
- None Available

Product Specifications:
- None Available

Application Specifications:
- Metrimate Self-Locking Connectors (PDF, English)
- METRIMATE Self-Locking Connectors (PDF, English)

Instruction Sheets:
- None Available

CAD Files:
- None Available

List all Documents

Additional Information:
- Product Line Information

Related Products:
- Tooling

Product Features (Please use the Product Drawing for all design activity)

Product Type Features:
- Product Type = Header
- Number of Positions = 3
- Gender = Socket
- Keyed = No
- Mount = Printed Circuit Board
- PCB Mount Angle = Vertical
- Mounting Ears = With
- Post Type = Solder Post
- Mating Connector Lock = Without
- PCB Retention Feature = Yes
- Comment = Pin and socket headers do not mate.

Electrical Characteristics:
- Voltage (VAC) = 600
- Current Rating (Amps.) = 14

Termination Related Features:
- Termination (Solder) Post Length (mm [in]) = 4.72 [0.186]

Body Related Features:
- Connector Configuration = In-Line
- Coaxial Socket = Without
- Centerline (mm [in]) = 5.00 [0.197]
- Jackscrew = Without
- 8/32 Insert = No
- PCB Retention Method = Mounting Holes

Contact Related Features:
- Contact Mating Area Plating Material = Tin
- Contact Material = Phosphor Bronze

Housing Related Features:
- Housing Material = Thermoplastic
- Housing Color = Red
- Housing Flammability Rating = UL 94V-0

Industry Standards:
- RoHS/ELV Compliance = Not ELV/RoHS compliant
- Lead Free Solder Processes = Wave solder capable to 240°C, Wave solder capable to 260°C, Wave solder capable to 265°C

Packaging Related Features:
- Packaging Quantity = 100

Other:
- Brand = AMP

© 2008 Tyco Electronics Corporation All Rights Reserved
Downloaded from Arrow.com.