XENSIV™ High-resolution on-axis magnetic angular position sensor with PSI5 output

Key benefits & features

The benefits and features of XENSIV™ AS5172 are listed below:

Table 1 Added value of using AS5172

Benefits	Features
Resolve small angular excursion with high accuracy	12-bit resolution @90° minimum arc
Accurate angle measurement	Low output noise, low inherent INL
Higher durability and lower system costs (no shield needed)	Magnetic stray field immunity
Enabler for safety critical applications	Functional safety, diagnostics
Suitable for automotive applications	AEC-Q100 Grade 0 qualified

Applications

The AS5172 is ideal for automotive applications like brake and gas pedals, throttle valve and tumble flaps, steering angle sensors, chassis ride, EGR, fuel-level measurement systems, 2/4WD switch, and contactless potentiometers.

General description

The AS5172 is a magnetic position sensor with a high resolution 12-bit PSI5 output according PSI5 specification version 1.3 and 2.1.

Based on a Hall sensor technology, this device measures the orthogonal component of the flux density (Bz) over a full-turn rotation and compensates for external stray magnetic fields with a robust architecture based on a 14-bit sensor array and analog front-end (AFE). A sub-range can programmed to achieve the best resolution for the application. To measure the angle, only a simple two-pole magnet rotating over the center of the package is required. The magnet may be placed above or below the device. The absolute angle measurement provides an instant indication of the magnet's angular position. The AS5172 operates up to a voltage of 16.5V and is protected against overvoltage up to +20V. In addition, the supply pins are protected against reverse polarity up to –18V.

Programmability over the VDD pin reduces the number of pins on the application connector.

The AS5172 is available in a TSSOP14.

The product is defined as SEooC (Safety Element out of Context) according ISO26262.

The product is fully system level EMC and ESD tested according OEM standards.

Downloaded from Arrow.com.

Table of contents

Key benefits & features . . . 1
Applications . . . 1
General description . . . 1
Table of contents . . . 2
1 Block diagram . . . 4
2 Ordering information . . . 5
3 Pin assignments . . . 6
3.1 Pin diagram . . . 6
4 Absolute maximum ratings . . . 7
4.1 System electrical and timing characteristics . . . 8
5 Electrical system characteristics . . . 9
5.1 Magnetic characteristics . . . 10
5.2 Electrical and timing characterization of the PSI5 interface . . . 11
5.2.1 Synchronization signal PSI5 V1.3 . . . 11
5.3 Synchronization signal detection . . . 13
5.4 Synchronization signal with discharge by AS5172 . . . 14
5.5 PSI5 block parameters . . . 17
6 Detailed description . . . 19
7 Register description . . . 20
7.1 OTP (non-volatile memory) register description . . . 20
7.2 Volatile memory register description . . . 23
7.3 SFR description . . . 24
7.4 Programming . . . 24
7.4.1 UART-over-PSI5 . . . 24
7.5 UART protocol . . . 26
7.5.1 Reading of the 14-bit angle information . . . 26
7.5.2 Reading the magnitude and AGC . . . 27
7.5.3 Exiting the communication mode . . . 27
7.5.4 Burn the OTP registers . . . 27
7.5.5 AS5172 transfer function . . . 27
7.6 Multiple quadrants . . . 28
7.6.1 Extended magnetic input range . . . 30
7.6.2 Rolling counter . . . 30
7.6.3 Special functions . . . 30
7.6.4 14-bit mode . . . 30
7.6.5 Quadrant detection . . . 31
7.6.6 Extended PSI5 initialization phase . . . 31

Downloaded from Arrow.com.

7.7 PSI5 interface . . . 31
7.7.1 Bit encoding - AS5172 to ECU communication . . . 31
7.7.2 Data frames - AS5172 to ECU communication . . . 32
7.7.3 Data ranges . . . 32
7.7.4 Data range according PSI5 V1.3 . . . 32
7.7.4.1 Data range according PSI5 V2.1 . . . 34
7.7.4.2 PSI5 data frame 20-bit mode with 12-bit sensor data . . . 34
7.7.4.3 PSI5 data frame 20-bit mode with 12-bit sensor data and quadrant detection . . . 35
7.7.4.4 PSI5 data frame 20-bit mode with 14-bit sensor data . . . 35
7.7.4.5 PSI5 data frame 16-bit mode . . . 36
7.7.5 PSI5 modes . . . 36
7.7.6 PSI5 timing . . . 37
7.7.6.1 Timing synchronous mode P10P-500/3L . . . 38
7.7.6.2 Timing synchronous mode P10P-500/3L with discharge pulse . . . 39
7.7.6.3 Timing asynchronous modes A10P-250/1L and A10P-500/1L . . . 40
7.7.6.4 Timing asynchronous modes A20CRC-200/1H and A20CRC-300/1L . . . 43
7.7.7 PSI5 initialization . . . 43
7.7.7.1 Initialization phase data format . . . 45
7.7.7.2 Initialization data content . . . 46
7.7.7.3 Run mode . . . 46
7.7.8 Communication modes . . . 46
7.7.8.1 Asynchronous mode (PSI5-A) . . . 46
7.7.8.2 Synchronous parallel bus mode (PSI5-P) . . . 47
7.7.8.3 Synchronous universal bus mode (PSI5-U) . . . 47
7.7.9 Diagnostic . . . 48
7.7.9.1 Diagnostic procedure in PSI5 . . . 49

8 Application information . . . 51
8.1 Signature calculation . . . 51
8.2 Programming procedure . . . 51
8.3 Recommended application diagrams and built-in capacitors . . . 52

9 Package drawings & markings . . . 53
9.1 Mechanical data . . . 54

Revision history . . . 55

Disclaimer . . . 56

Downloaded from Arrow.com.

1 Block diagram

The functional blocks of this device are shown below:

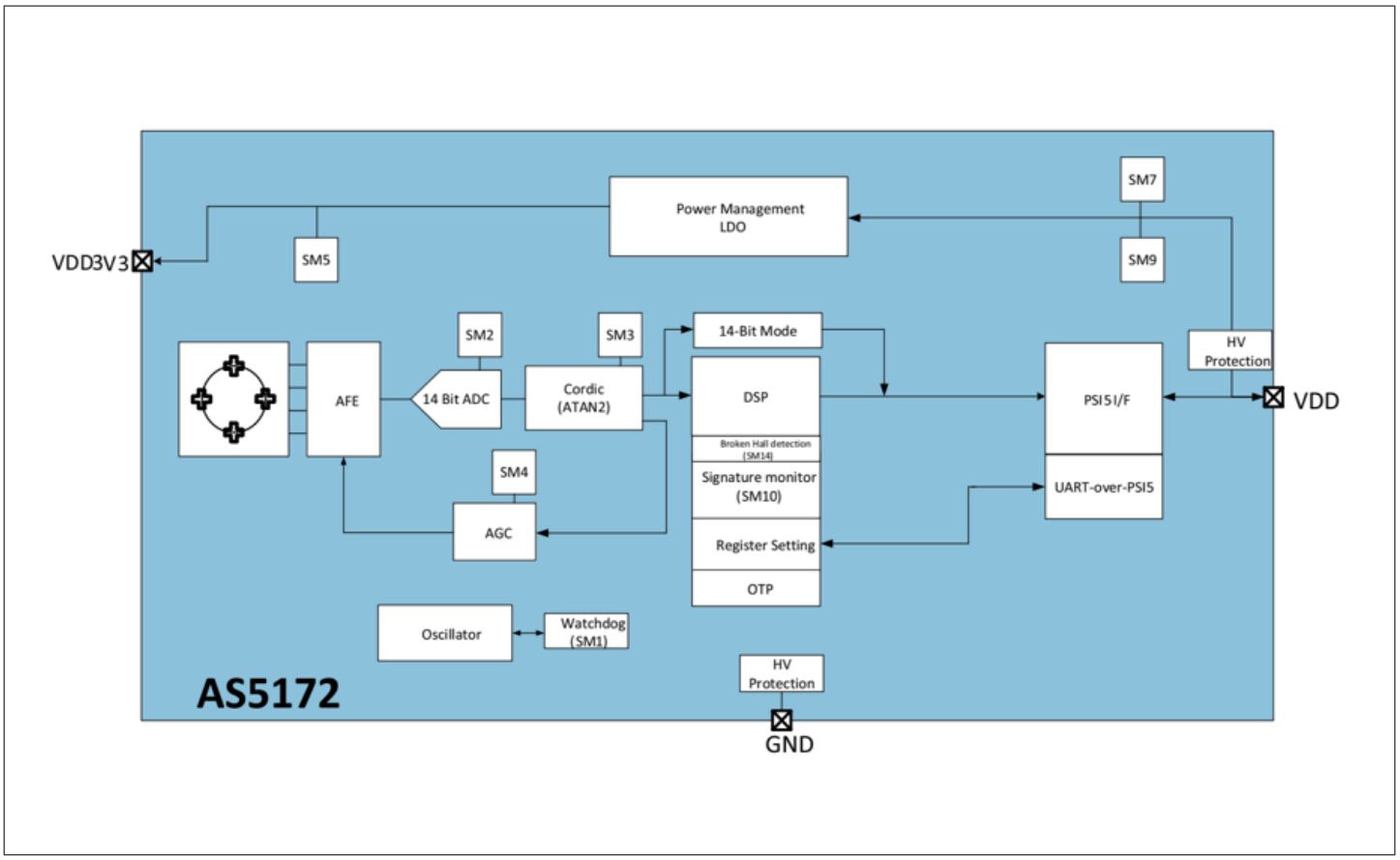

Figure 1 Functional blocks of AS5172

Detailed safety mechanism information can be found in chapter Diagnostic.

Downloaded from Arrow.com.

2 Ordering information

Product type (Infineon)	Product type (ams)	Address	Marking	Delivery form	Delivery quantity
AS5172B-HTST-TSSOP14-01	AS5172B-HTST[1)]	TSSOP-14	AS5172B	13" Tape & reel in dry pack	4500 pcs/reel
AS5172B-HTST-TSSOP14-02					
AS5172B-HTSM-TSSOP14-01	AS5172B-HTSM [1)]	TSSOP-14	AS5172B	7" Tape & reel in dry pack	500 pcs/reel
AS5172B-HTSM-TSSOP14-02					

1) Safety function SM11 is disabled in version AS5172B.

Downloaded from Arrow.com.

3 Pin assignments

3.1 Pin diagram

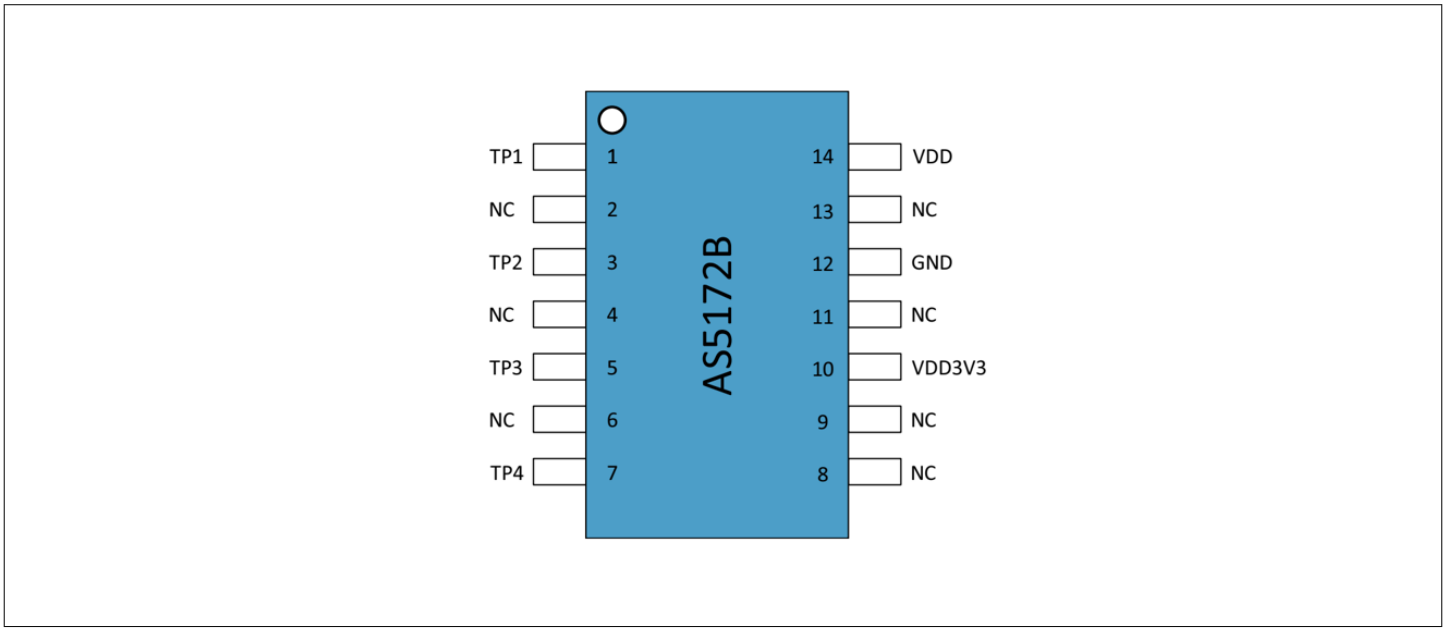

Figure 2 AS5172B pin assignment (Top View, TSSOP14)

Table 2 AS5172B pin description

Pin number	Pin name	Type	Description
1	TP1	Test pin	Connected to GND in application
2	NC	Not connected	Connected to GND in application
3	TP2	Test Pin	Connected to GND in application
4	NC	Not connected	Connected to GND in application
5	TP3	Test Pin	Connected to GND in application
6	NC	Not connected	Connected to GND in application
7	TP4	Test Pin	Connected to GND in application
8	NC	Not connected	Connected to GND in application
9	NC	Not connected	Connected to GND in application
10	VDD3V3	Supply	Requires a 470nF capacitor to GND
11	NC	Not connected	Connected to GND in application
12	GND	Supply	Ground
13	NC	Not connected	Connected to GND in application
14	VDD	Supply	Supply/PSI5 interface/UART-over-PSI5 programming. Requires a 15nF capacitor to GND

Downloaded from Arrow.com.

4 Absolute maximum ratings

Stresses beyond those listed under Absolute Maximum Ratings may cause permanent damage to the device. These are stress ratings only. Functional operation of the device at these or any other conditions beyond those indicated under Operating Conditions is not implied. Exposure to absolute maximum rating conditions for extended periods may affect device reliability.

Table 3 Absolute maximum ratings

Symbol	Parameter	Min.	Max.	Units	Comments
Electrical parameters					
VDD	DC supply voltage at VDD pin	–18	20	V	Not operational
VREGOUT	DC voltage at the VDD3V3 pin	–0.3	5	V	
ISCR	Input current (latch-up immunity)	±100		mA	AEC-Q100-004
Continuous power dissipation (T_{AMB} = 70°C)					
P_{T_Tssop}	Continuous power dissipation		377	mW	
Electrostatic discharge					
$ESD_{HBM\ on\ all}$	Electrostatic discharge HBM	±2		kV	AEC-Q100-002
$ESD_{HBM\ on\ TSSOP}$	On VDD and GND	±4		kV	AEC-Q100-002
Temperature ranges and storage conditions					
T_{AMB_LM}	Operating temperature range	–40	150	°C	AS5172B ambient temperature
TaProg	Programming temperature	5	45	°C	Programming @ room temperature (25°C ± 20°C)
T_{STRG}	Storage temperature range	–55	125	°C	
T_{BODY}	Package body temperature		260	°C	The reflow peak soldering temperature (body temperature) is specified according to IPC/JEDEC J-STD-020 'Moisture/Reflow Sensitivity Classification for Non-hermetic Solid State Surface Mount Devices.' The lead finish for Pb-free leaded packages is 'Matte Tin' (100% Sn)
RH_{NC}	Relative humidity (non-condensing)	5	85	%	
MSL	Moisture sensitivity level	3			Represents a maximum floor life time of 168 hours

Downloaded from Arrow.com.

4.1 System electrical and timing characteristics

All limits are guaranteed. The parameters with min and max values are guaranteed with production tests or SQC (Statistical Quality Control) methods.

All in this datasheet defined tolerances for external components need to be assured over the whole operation conditions range and also over lifetime.

Overall condition:

T_{AMB} = –40°C to 150°C for AS5172B;

VDD = 4V - 12V (sync pulse voltage not included);

Components spec; unless otherwise noted

Table 4 Operating conditions

Symbol	Parameter	Conditions	Min.	Typ.	Max.	Unit
VDD	Positive supply voltage	Static condition	4		12	V
VDD_Rx	Positive supply voltage	Dynamic condition	4		16.5	V
VDD3	Regulator voltage		3.3	3.45	3.6	V
IDD	Current consumption	No programming and no PSI5 communication	11	15	19	mA
IDDProg	Current consumption	During programming		80		mA
IDDProgUN	Current consumption of unprogrammed device	Unprogrammed device@ T_{AMB} = 25°C ± 10°C			49	mA
IDD max	Current consumption	IDD + IS_Common			49	mA
IS_Common	Sink current (common mode)		22	26	30	mA
IS_low power mode		Sink current (low power mode)	11	13	15	mA
IDD_D	Current drift of IS in low power mode		–4		4	mA
IDD_DRate	Current drift rate	Not tested			1	mA/s
TSUP	Start-up time, with ±2mA tolerance in respect to the trimmed ILO Value (IL)	Functional mode			5	ms
PSI5_T	Fall/rise time of the current slope	Programmed in production	300	500	700	ns
PSI5_TBITL	Bit time 125kbit/s mode	Not tested - guaranteed by design	7.6	8.0	8.4	µs
PSI5_TBITH	Bit time 189kbit/s mode	Not tested - guaranteed by design	5.0	5.3	5.6	µs
PSI5_MSR	Mark/space ratio	$(t_{fall,80\%} - t_{rise,20\%})$/PSI5_TBIT or $(t_{fall,20\%} - t_{rise,80\%})$/PSI5_TBIT Programmed in production	47	50	53	%

Downloaded from Arrow.com.

5 Electrical system characteristics

T_{AMB} = –40°C to 150°C for AS5172B;
VDD = 4V to 12V (sync pulse voltage not included); magnetic characterization; unless otherwise noted

Table 5 Electrical system characteristics

Symbol	Parameter	Conditions	Min.	Typ.	Max.	Unit
CRES	Core resolution			14		bit
OutputRes		≥ 90° slope			12	bit
INLopt	Integral non-linearity (optimum)	Best aligned reference magnet [1] at 25°C over full turn 360°	–0.5		0.5	deg
INLtemp	Integral non-linearity (optimum)	Best aligned reference magnet [1] over temperature –40°C to 150°C over full turn 360°	–0.9		0.9	deg
INL	Integral non-linearity	Reference magnet [1] over temperature –40°C to 150°C over full turn 360° and displacement	–1.4		1.4	deg
ST	Sampling time			128		µs
SPDF	System propagation delay fast	Depending on the PSI5 standard	200		500	µs
CoreClk	Core clock			16		MHz
Coreclk tol	Tolerance of the core clock		–3.5		3.5	%
ON	Output noise peak to peak	Related to 12-bit Not tested			4	LSB

1) Reference magnet: NdFeB, 8mm diameter, 2.5mm thickness.

Table 6 Power management - supply monitor - timing

Symbol	Parameter	Conditions	Min.	Typ.	Max.	Unit
VDDUVTH	VDD undervoltage upper threshold		3.6	3.8	4.0	V
VDDUVTL	VDD undervoltage lower threshold		3.4	3.6	3.8	V
VDDUH	VDD undervoltage hysteresis	Info parameter	150	200	250	mV
UVDT	VDD undervoltage detection time		10	50	250	µs
UVRT	Undervoltage recovery time		10	50	250	µs
VDDOVTH	VDD overvoltage upper threshold	If sensor in overvoltage condition, ECU gets the Error flag. --> overheating possible in the application	16.7	18	19.1	V

(table continues...)

Downloaded from Arrow.com.

Table 6 (continued) Power management - supply monitor - timing

Symbol	Parameter	Conditions	Min.	Typ.	Max.	Unit
VDDOVTL	VDD overvoltage lower threshold		14.5	15.5	16.5	V
OVDT	VDD overvoltage detection time	From the time VDD exceeding 16.5V		1000	2000	µs
OVRT	VDD overvoltage recovery time	From the time VDD returning from VDD > 16.5V to normal operating voltage (4V< VDD < 17V)		1000	2000	µs
VDD3V3UVTH	VDD3V3 reset upper threshold		2.5	2.8	2.95	V
VDD3V3UVTL	VDD3V3 reset lower threshold		2.4	2.6	2.72	V
VDD3V3UVHYS	VDD3V3 reset hysteresis	Info parameter	105	175	245	mV
TDETWD	WatchDog error detection time				12	ms

5.1 Magnetic characteristics

T_{AMB} = –40°C to 150°C for AS5172B;

VDD = 4V - 12V (sync pulse voltage not included); unless otherwise noted.

Two-pole cylindrical diametrically magnetized source:

Table 7 Magnetic characteristics

Symbol	Parameter	Condition	Min.	Typ.	Max.	Units
Bz	Orthogonal magnetic field strength	Required orthogonal component of the magnetic field strength measured at the package surface along a circle of 1.25mm @ = 0	30		70	mT
BzE	Orthogonal magnetic field strength -extended mode	Required orthogonal component of the magnetic field strength measured at the package surface along a circle of 1.25mm MFER = 1	10		90	mT
Disp[1)]	Displacement radius	Offset between defined device center and magnet axis. Dependent on the selected magnet.		0.5		mm

1) Reference magnet: NdFeB, 8mm diameter, 2.5mm thickness.

Downloaded from Arrow.com.

5.2 Electrical and timing characterization of the PSI5 interface

This chapter describes the synchronization signal from the ECU according to the PSI5 specification V1.3 and V2.1. The parameters in this chapter are not reflecting the full specification range of the detection circuit for the synchronization signal.

5.2.1 Synchronization signal PSI5 V1.3

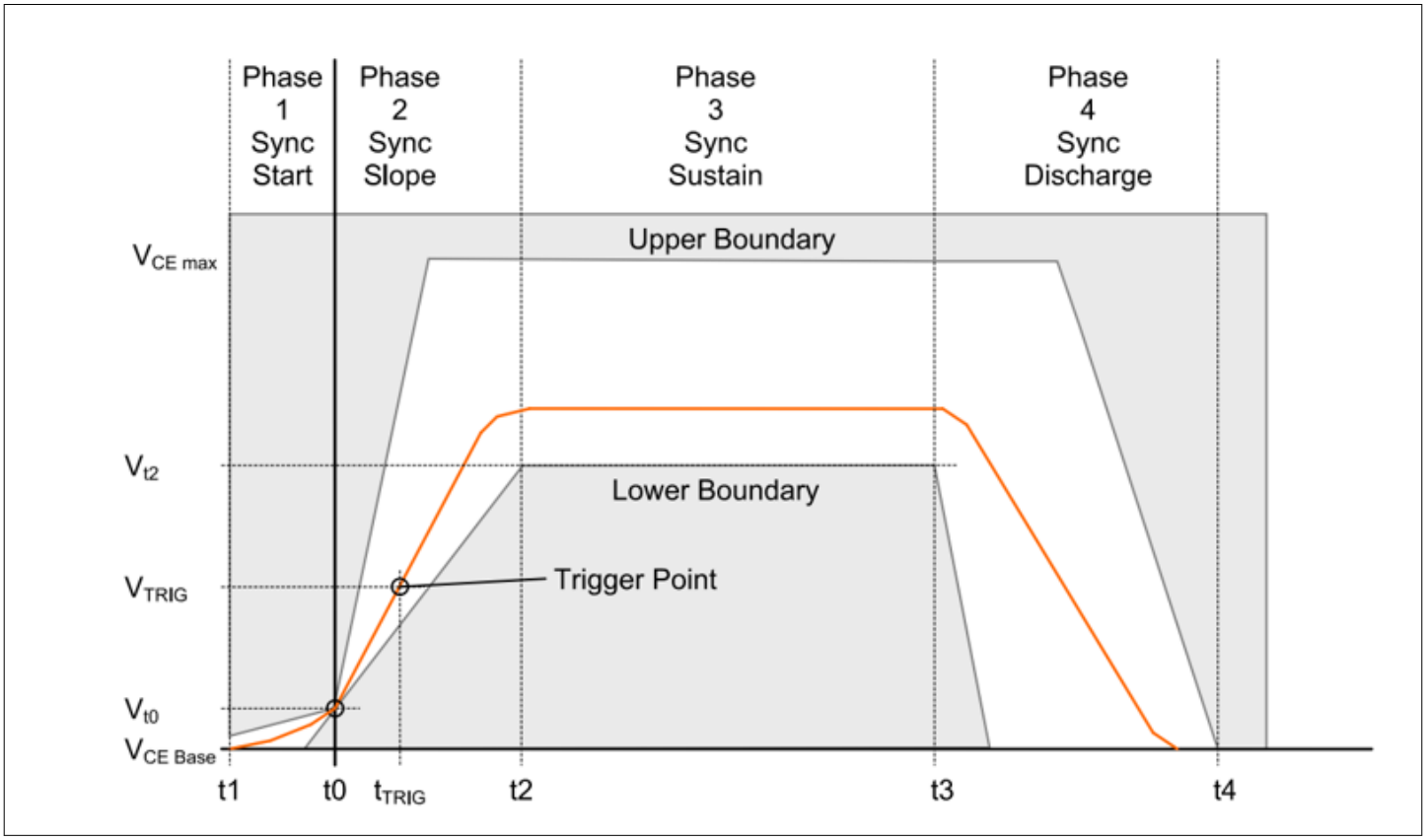

Figure 3 Synchronization signal

The synchronization signal start time t0 is defined as a crossing of the Vt0 value. In the 'Sync Start' phase before this point, a 'rounding in' of the voltage starting from VCE, Base to Vt0 is allowed for a maximum of t1. During the 'Sync Slope' phase, the voltage rises within given slew rates to a value between the minimum sync signal voltage Vt2 and the maximum interface voltage VCE, max. After maintaining the voltage between this limits until a minimum of t3, the voltage decreases in the 'Sync Discharge' phase until having reached the initial VCE, base value until latest t4.

Table 8 Synchronization signal PSI5 V1.3[1)]

Symbol	Parameter	Conditions	Min.	Typ.	Max.	Unit
VBase	Base supply voltage	Voltage value at ECU	5.7		11	V
Vto	Sync slope reference voltage	Reference to VBase		0.5		V
Vt2	Sync signal sustain voltage	Reference to VBase	3.5			V
Vce,max	Maximum interface voltage				16.5	V

(table continues...)

Downloaded from Arrow.com.

Table 8 (continued) Synchronization signal PSI5 V1.3[1)]

Symbol	Parameter	Conditions	Min.	Typ.	Max.	Unit
t0	Reference time	Reference time base; time when the sync signal crosses Vt0		0		µs
t1	Sync signal earliest start	V=V_{CE} Delta current less than 2mA	-3		0	µs
t2	Sync signal sustain start	@Vt2		7		µs
	Sync slope rising slew rate	Lower limit is valid for Vt0 to Vt2	0.43	1.0	1.5	V/µs
	Sync slope falling slew rate		–1.5			V/µs
t3	Sync signal sustain time			16		µs
t4	Discharge time limit			35		µs
Tslot1	Start of time slot 1		44	51	59	µs
Tslot2	Start of time slot 2		181.3	195	210	µs
Tslot3	Start of time slot 3		328.9	350	373	µs

1) The parameters in this table are just info parameters and therefore not production tested. The production related parameters are in the PSI5 block parameters table.

Table 9 Synchronization signal PSI5 V2.1 [1)]

Symbol	Parameter	Conditions	Min.	Typ.	Max.	Unit
VBase	Base supply voltage	Voltage value at ECU	5.7 (4.4)		11	V
Vto	Sync slope reference voltage	Reference to VBase		0.5		V
Vt2	Sync signal sustain voltage	Reference to VBase	3.5 (2.5)			V
Vce,max	Maximum interface voltage				16.5	V
t0	Reference time	Reference time base; time when they sync signal crosses Vt0		0		µs
t1	Sync signal earliest start	V=VCE Delta current less than 2mA	-3		0	µs
t2	Sync signal sustain start	@Vt2		7		µs
	Sync slope rising slew rate	Lower limit is valid for Vt0 to Vt2	0.43		1.5	V/µs
	Sync slope falling slew rate		-1.5			V/µs
t3	Sync signal sustain time			16		µs

(table continues...)

Downloaded from Arrow.com.

Table 9 (continued) Synchronization signal PSI5 V2.1 [1)]

Symbol	Parameter	Conditions	Min.	Typ.	Max.	Unit
t4	Discharge time limit				35	µs
Tslot1	Start of time slot 1		44			µs

1) The parameters in this table are just info parameters and therefore not production tested. The production related parameters are in the PSI5 block parameters table.

5.3 Synchronization signal detection

The AS5172 has to detect the trigger within the 'trigger window' during the rising slope of the synchronization signal at the trigger point with the trigger voltage V_{TRIG} and the trigger time t_{TRIG} .

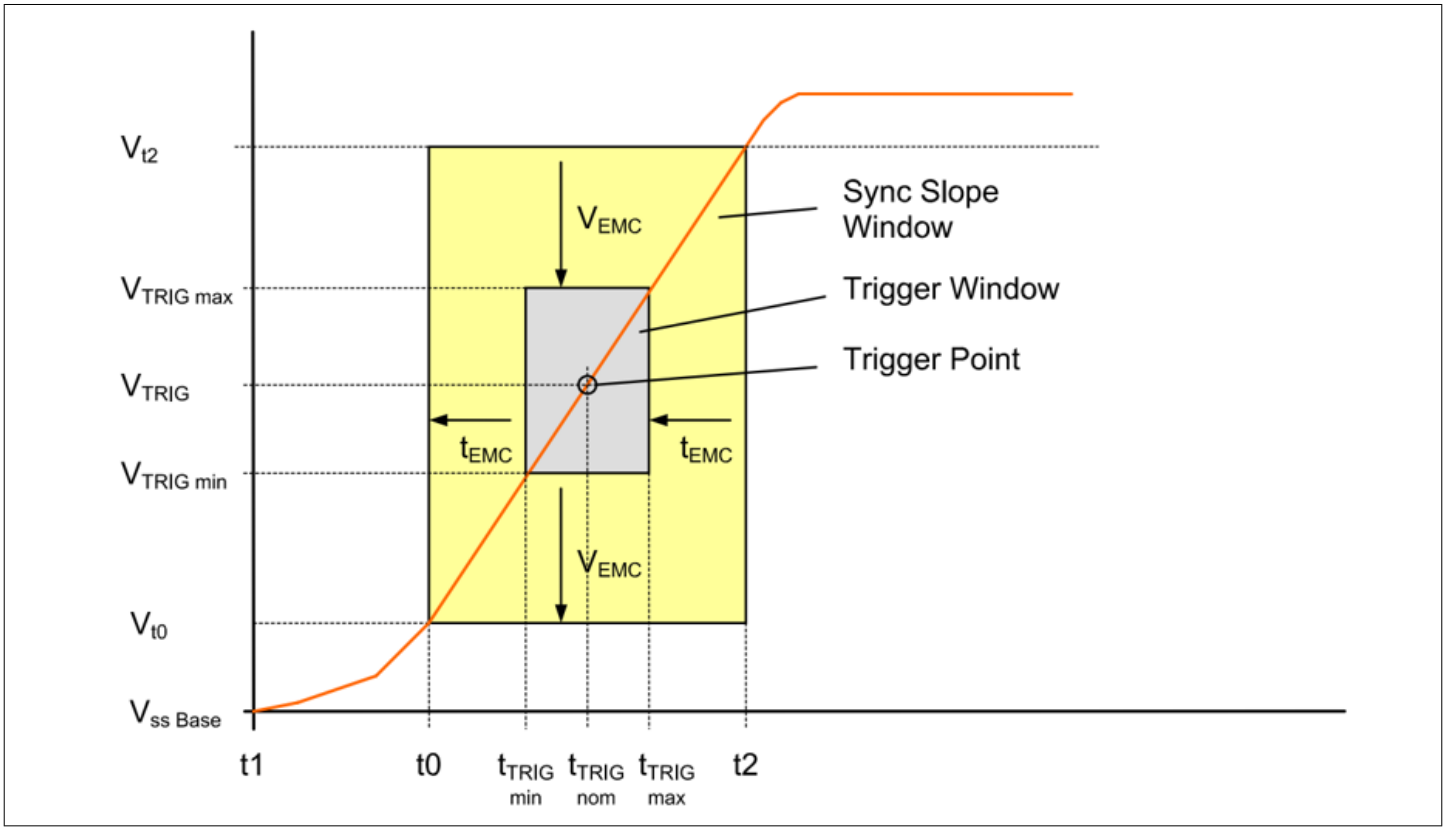

Figure 4 Trigger window

In order to take into account voltage differences at different points of the interface lines, an additional safety margin for the trigger detection is defined by V_{EMC} and t_{EMC} .

The values are based on the PSI5 specification and shows the detection of the synchronization signal from the ECU according the PSI5 specification.

Table 10 Synchronization detection [1)]

Symbol	Parameter	Conditions	Min.	Typ.	Max.	Unit
VEMC_C	Margin for voltage variations	Common power mode	–0.9		0.9	V

(table continues...)

Downloaded from Arrow.com.

Table 10 (continued) Synchronization detection[1)]

Symbol	Parameter	Conditions	Min.	Typ.	Max.	Unit
VEMC_LP	Margin for voltage variations	Low power mode	–0.7		0.7	V
VTrig_C	Trigger voltage threshold	Common power mode	1.4	2.0	2.6	V
VTrig_LP	Trigger voltage threshold	Low power mode	1.2	1.5	1.8	V
t_{TRIG}	Nominal trigger detection time	@V_{TRIG} , @AS5172 pins; Referenced to a straight sync signal slope with nominal slew rate of 0.43 V/µs	2.1	3.5	4.9	µs
VCE,max	Maximum interface voltage				16.5	V
t_{EMC}	Margin for timing variations of the signal on the interface line	Relative to nominal trigger window time	–2.1		2.1	µs
$t_{tol\ detect}$	Tolerance of internal trigger detection delay				3	µs
T_{TRIG}	Trigger detection time (according PSI5_spec_v2d2_base)	$T_{TRIG} = t_{TRIG} + t_{tol\ detect} + t_{EMC}$; Reference for AS5172 time base	0		10	µs

1) The parameters in this table are just info parameters and therefore not production tested. The production related parameters are in the PSI5 block parameters table.

5.4 Synchronization signal with discharge by AS5172

This chapter describes the modifications required if the ECU uses a special transreceiver.

The parameters in this chapter are not reflecting the full specification range of the detection circuit for the synchronization signal.

Downloaded from Arrow.com.

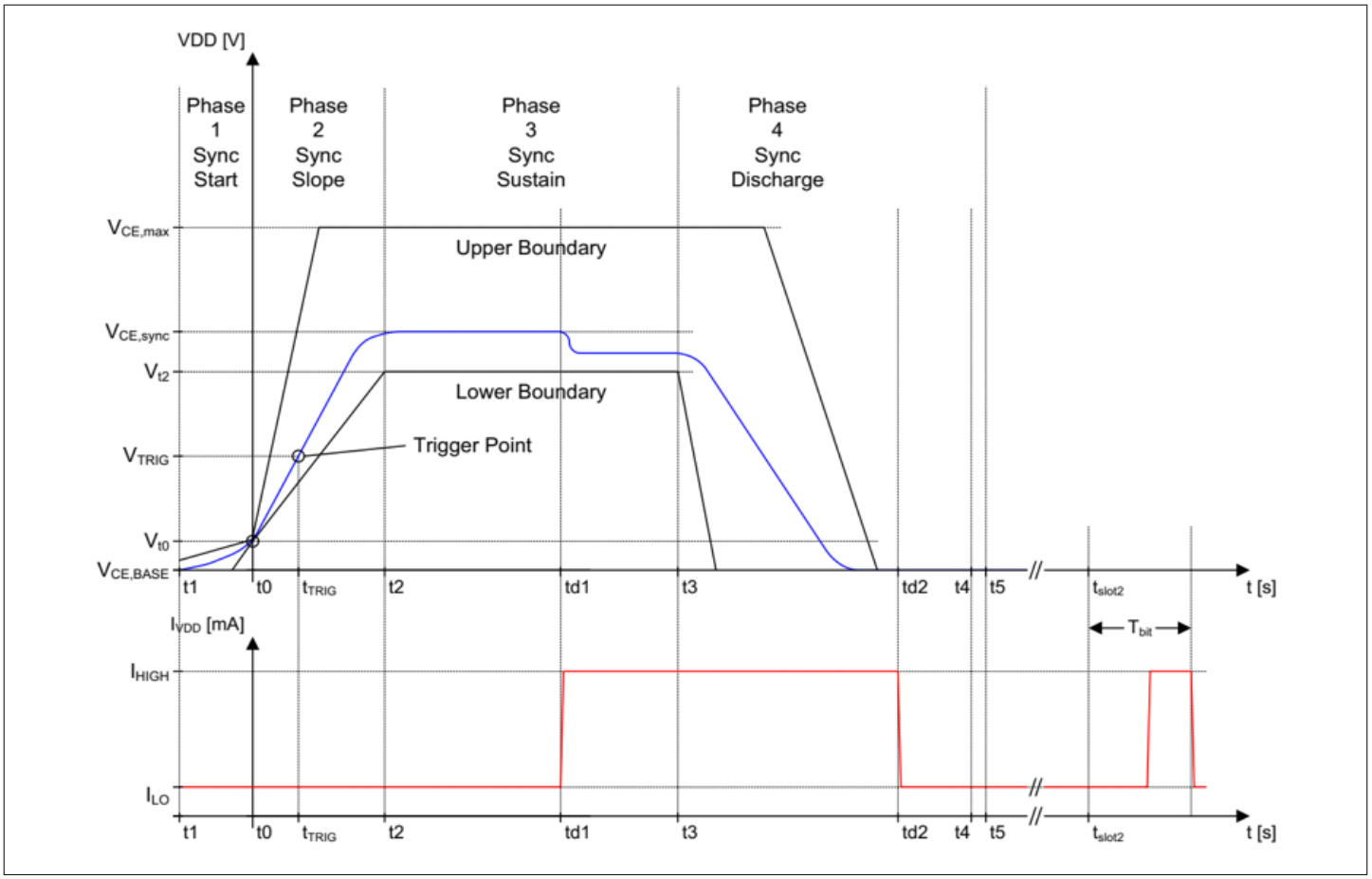

Figure 5 **Synchronization signal from ECU with discharge by the AS5172**

Table 11 **Synchronization signal from ECU with discharge parameter** [1)]

Symbol	Parameter	Conditions	Min.	Typ.	Max.	Unit
$V_{CE, BASE}$	Base supply voltage	Mean voltage value at ECU	5.0	6.0	7.0	V
$V_{CE, BASE_R}$	Base supply voltage including ripple		4.5	6.0	7.0	V
V_{t0}	Sync slope reference voltage	Referenced to $V_{CE, BASE}$		0.5		V
V_{t2}	Sync signal sustain voltage	Referenced to $V_{CE, BASE}$	+3.5	+5.0	+6.0	V
$V_{CE,max}$	Sync signal max. voltage		10	11	14.5	V
V_{CE,max_R}	Sync signal max. voltage including ripple		10	14	16.5	V
t0	Reference time	Reference time base; time when the synchronization signal crosses V_{t0}		0		µs
t1	Sync signal earliest start	$V=V_{CE, BASE}$	-3		0	µs

(table continues...)

Downloaded from Arrow.com.

Table 11 (continued) Synchronization signal from ECU with discharge parameter [1)]

Symbol	Parameter	Conditions	Min.	Typ.	Max.	Unit
t2	Sync signal sustain start	@V_{t2}	3	4	5	µs
$S_{sync,r}$	Sync slope rising slew rate	10% to 90% of $V_{CE,max}$	0.7	1.0	1.6	V/µs
$S_{sync,f}$	Sync slope falling slew rate	90% down to 10% of $V_{CE,max}$	-1.6	-1.0	-0.7	V/µs
t3	Sync signal sustain time	V=$V_{CE,sync}$	27.5	31	35.1	µs
td1	AS5172 signals discharge		18.5	22.75	28	µs
td2	Discharge stop time		38	43.25	50	µs
t4	Enable pull down to $V_{CE,BASE}$ by ECU		62.5	65	65.5	µs
t5	Receiver (ECU) enable start time	Receiver (ECU) read for transmission	63	66.2	65.5	µs
V_{TRIG}	Trigger voltage threshold		1.4	2.0	2.6	V
t_{TRIG}	Nominal trigger detection time	@V_{TRIG} , @AS5172 Pins; Referenced to a straight sync signal slope with nominal slew rate of 0.7 V/µs	1.25	2.15	3.05	µs
t_{EMC}	Margin for timing variations of the signal on the interface line	Relative to nominal trigger window time	-1.25		1.25	µs
$t_{tol\ detect}$	Tolerance of internal trigger detection delay				3	µs
T_{TRIG}	Trigger detection time (according PSI5_spec_v2d2_base)	$T_{TRIG} = t_{TRIG} + t_{tol\ detect} + t_{EMC}$; Reference for sensor time base	0		7.5	µs
$t_{slot\ 1}$	Start of time slot 1	Time slot 1 cannot be used in this communication mode	44	51	59	µs
t_{slot2}	Start of time slot 2		181.3	195	210	µs
t_{slot3}	Start of time slot 3		328.9	350	373	µs

1) The parameters in this table are just info parameters and therefore not production tested. The production related parameters are in the PSI5 block parameters table.

Downloaded from Arrow.com.

5.5 PSI5 block parameters

Table 12 Block parameters

Symbol	Parameter	Conditions	Min.	Typ.	Max.	Unit
$V_{CE,BASE\ ECU}$	Base ECU supply voltage	Voltage at ECU	4.4		11	V
$V_{CE,BASE}$	Base supply voltage	Voltage at the sensor	4.0		11	V
V_{SUPPLY}	Low supply voltage	Supply voltage for comparator	3.3	3.45	3.6	V
V_{t0}	Sync slope reference	Referred to $V_{CE,BASE}$		0.5		V
V_{t2}	Minimum sync signal sustain voltage (common mode)	Referred to $V_{CE,BASE}$	3.5			V
V_{t2_L}	Minimum sync signal sustain voltage (low power mode)	Referred to $V_{CE,BASE}$	2.5			V
$V_{CE\ MAX}$	Maximum interface voltage				16.5	V
t_2	Sync signal sustain start	Voltage@V_{t2}			7	µs
SL_{RISE}	Rising slope		0.43		1.6	V/µs
SL_{FALL}	Falling slope	Depends on voltage and discharge limit, external load has to meet these values	–1.75			V/µs
t_3	Sync signal sustain time	Info parameter: Recommended ECU timing	16		35.1	µs
t_4	Discharge time limit	Info parameter: Allowed variation of synch pulse width for synch pulse detection circuit	17.67		62	µs
T_{SYNC}	Synchronization period	Info parameter: To prevent shifts of detection threshold	250	500		µs
V_{TRIG}	Trigger voltage threshold (common mode)		1.4	2.0	2.6	V
V_{TRIG_L}	Trigger voltage threshold (low power mode)		1.2	1.5	1.8	V
$V_{TRIG\ EMC}$	Trigger Voltage threshold under EMC (common mode)	At SL_{RISE} = 0.43 V/µs; For EMC ≤ 1V $_{PEAK}$ ≥ 100kHz Not tested - Guaranteed by Design	0.5	2.0	3.5	V

(table continues...)

Downloaded from Arrow.com.

Table 12 (continued) Block parameters

Symbol	Parameter	Conditions	Min.	Typ.	Max.	Unit
$V_{TRIG\ EMC}$	Trigger voltage threshold under EMC (low power mode)	At SL_{RISE} = 0.43 V/µs; For EMC ≤ 1V $_{PEAK}$ ≥ 100kHz Not tested - Guaranteed by Design	0.5	1.5	2.5	V
$t_{tol\ detect}$	Tolerance of internal trigger detection delay				3	µs
t_{BLANK}	Output signal blanking time	Blanking of trigger signal in digital part after first rising edge to avoid multiple trigger signals during EMC events. Not tested - Guaranteed by Design	121		135	µs
V_{COM}	Comparator input common mode voltage			1.5		V
RES_{div}	Resistor divider division factor	Not tested - Guaranteed by Design 2% mismatch	7.84	8	8.16	V/V
f_{C_LP}	Low pass filter cut-off frequency	Not tested - Guaranteed by Design	2.5	5	7.5	kHz

Downloaded from Arrow.com.

6 Detailed description

The AS5172 is a Hall-based rotary magnetic position sensor using a CMOS technology. The lateral Hall sensor array converts the magnetic field component perpendicular to the surface of the chip into a voltage.

The signals coming from the Hall sensors are first amplified and filtered before being converted by the analog-to-digital converter (ADC). The output of the ADC is processed by the CORDIC block (Coordinate-Rotation Digital Computer) to compute the angle and magnitude of the magnetic field vector. The sensor and analog front-end (AFE) section works in a closed loop alongside an AGC to compensate for temperature and magnetic field variations. The calculated magnetic field strength (MAG), the automatic gain control (AGC) and the angle can be read through the UART-over-PSI5 protocol during programming.

The magnetic field coordinates provided by the CORDIC block are fed into a linearization block (DSP) which generates the transfer function.

The output of the AS5172 can be programmed to define a starting position (zero angle) and a stop position (maximum angle).

The AS5172 can be programmed through the VDD Pin with a special UART-over-PSI5 protocol which allows writing an on-chip non-volatile memory (One Time Programmable memory) where the specific settings are stored.

The AS5172 is equipped with a PSI5 Interface current driver and a PSI5 Interface receiver. The current driver drives the additional sink current to reach the I_high level on the VDD. The receiver is comparing the voltage level at the VDD Pin with the internal voltage thresholds.

The Sensor to ECU communication is described in the chapters below and is based upon the PSI5 standard.

The AS5172 supports, according the PSI5 standard, the synchronous mode or in asynchronous mode.

In PSI5 V1.3 (10-bit mode), the asynchronous modes can only use one time slot per period. For a transmission of one 12/16 bit data word, two periods are necessary.

AS5172 supports the bus modes PSI5-U and PSI5-P. The daisy chain mode is not supported.

Downloaded from Arrow.com.

7 Register description

7.1 OTP (non-volatile memory) register description

Table 13 OTP (non-volatile memory) register description

Address	Bit nr.	Symbol	Description
0x01	0	Factory settings	Infineon factory settings
	1		
	2	Direction	Changes direction in 14-bit mode
	3	PSI5_14bit_angle	Enables 14-bit angle output
	4	PSI5_quad_info	Enables quadrant information
	5	PSI5_16bit_frame	Enables the PSI5 16-bit frame
	6	-	Not used
	7	Extended_init_phase	0 = 22 datablocks during Init phase 1 = 32 datablocks during Init phase
0x02	0	Factory settings	Infineon factory settings
	7:1	Infineon ID	Infineon production ID (F9)
0x03	7:0	Infineon ID	Infineon production ID (F9)
0x04	5:0	Infineon ID	Infineon production ID (F9)
	7:6	Factory settings	Infineon factory settings
0x05	7:0	Factory settings	Infineon factory settings
0x06	7:0		
0x07	7:0		
0x08	7:0		
0x09	7:0		
0x0A	7:0		
0x0B	7:0		
0x0C	0	Month[3]	Sensor Production Date (F8)
	1	Year[0]	
	2	Year[1]	
	3	Year[2]	
	4	Year[3]	
	5	Year[4]	
	6	Year[5]	
	7	Year[6]	
0x0D	0	Day[0]	Sensor Production Date (F8)
	1	Day[1]	

(table continues...)

Downloaded from Arrow.com.

Table 13 (continued) OTP (non-volatile memory) register description

Address	Bit nr.	Symbol	Description
	2	Day[2]	
	3	Day[3]	
	4	Day[4]	
	5	Month[0]	
	6	Month[1]	
	7	Month[2]	
0x0E	0	Type[0]	Sensor Type (F4)
	1	Type[1]	
	2	Type[2]	
	3	Type[3]	
	4	Parameter[4]	Sensor Parameter (F5)
	5	Parameter[5]	
	6	Parameter[6]	
	7	Parameter[7]	
0x0F	0	Parameter[0]	
	1	Parameter[1]	Sensor Parameter
	2	Parameter[2]	
	3	Parameter[3]	
	4	Sensor_Code_Man[4]	Sensor Code Manufacturer (F6)
	5	Sensor_Code_Man[5]	
	6	Sensor_Code_Man[6]	
	7	Sensor_Code_Man[7]	
0x10	0	Sensor_Code_Man[0]	Sensor Code Manufacturer (F6)
	1	Sensor_Code_Man[1]	
	2	Sensor_Code_Man[2]	
	3	Sensor_Code_Man[3]	
	4	Sensor_Code_Veh[0]	
	5	Sensor_Code_Veh[1]	
	6	Sensor_Code_Veh[2]	
	7	Sensor_Code_Veh[3]	
0x11	7:0	PSI5Mode	PSI5 mode selection
0x12	0	Sync_discharge	Enables sync pulse discharging
	1	Init_phase_repetition[0]	PSI5 initialization phase repetition factor (k-times)

(table continues...)

Downloaded from Arrow.com.

Table 13 (continued) OTP (non-volatile memory) register description

Address	Bit nr.	Symbol	Description
	2	Init_phase_repetition[1]	
	3	PSI5_timeslot[0]	PSI5 timeslot for bus mode
	4	PSI5_timeslot[1]	
	5	Init_phase_disable	Disables the PSI5 initialization phase
	6	-	Not used
	7	-	Not used
	0	-	Not used
	1	-	Not used
	2	-	Not used
0x13	3	Quadrant[0]	Quadrant selection
	4	Quadrant[1]	
	5	-	Not used
	6	-	
	7	-	
0x14	7:0	CLH[7:0]	Clamping level high
0x15	0	CLH[8]	Clamping level high
	1	CLH[9]	
	2	CLH[10]	
	3	CLH[11]	
	4	CLL[0]	Clamping level low
	5	CLL[1]	
	6	CLL[2]	
	7	CLL[3]	
0x16	7:0	CLL[11:4]	Clamping level low
0x17	7:0	Offset[7:0]	Offset
0x18	7:0	Offset[15:8]	Offset
	0	Offset[16]	Offset
	1	Offset[17]	
	2	Offset[18]	
0x19	3	Offset[19]	
	4	Gain[0]	Gain
	5	Gain[1]	
	6	Gain[2]	

(table continues...)

Downloaded from Arrow.com.

Table 13 (continued) OTP (non-volatile memory) register description

Address	Bit nr.	Symbol	Description
	7	Gain[3]	
0x1A	7:0	Gain[11:4]	Gain
0x1B	0	Gain[12]	Gain
	1	Gain[13]	
	2	Gain[14]	
	3	Gain[15]	
	4	Gain[16]	
	5	BP[0]	
	6	BP[1]	Breakpoint/14-Bit Mode zero offset
	7	BP[2]	
0x1C	7:0	BP[10:3]	Breakpoint/14-Bit Mode zero offset
0x1D	0	BP[11]	Breakpoint/14-Bit Mode zero point offset
	1	BP[12]	
	2	BP[13]	
	3	Extended_range_disable	Disables the extended range for magnetic input field
	4	Reduced_angle_range	Enables the reduced angle range for segments smaller 23 degree
	5	-	Not used
	6	-	Not used
	7	Customer_lock	Customer lock
0x1E	7:0	VendorID[7:0]	Vendor ID (F3)
0x1F	7:0	Signature[7:0]	Signature calculated across the full OTP

7.2 Volatile memory register description

Table 14 Volatile memory register description

Address	Bit nr.	Symbol	R/W	Description
0x23	4:0	-		Not used
	5	DSP_reset	R/W	Reset of the DSP (Digital Signal Processing)
	6	GLoad	R/W	Enables GLoad
	7	-		Not used
0x32	7:0	Angle_CORDIC[7:0]	R	14-Bit Angle information (raw value without zero offset)

(table continues...)

Downloaded from Arrow.com.

Table 14 (continued) Volatile memory register description

Address	Bit nr.	Symbol	R/W	Description
0x33	5:0	Angle_CORDIC[13:8]	R	
	7:6	-		Not used
0x34	7:0	Magnitude	R	Magnitude at the CORDIC output
0x35	7:0	AGC	R	AGC (Automatic Gain Control)
0x36	7:0	Angle_DSP[7:0]	R	12-Bit Angle information (with zero offset, and customer settings)
0x37	3:0	Angle_DSP[11:8]	R	
	7:4	-		Not used
0x38	7:0	-	-	Not used
0x39	3:0	-	-	
	7:4	-		Not used
0x3A	7:0	FUSA[7:0]	R	FUSA output
0x3B	5:0	FUSA[13:8]	R	

7.3 SFR description

Table 15 SFR description

Address	Bit nr.	Symbol	Description
0x60	7:0	Pass2Function	Pass-to-function, see Programming chapter
0x61	7:0		
0x62	7:0	BurnOTP	BurnOTP, see Programming chapter
0x63	7:0		

7.4 Programming

7.4.1 UART-over-PSI5

The AS5172 is equipped with a one wire UART-over-PSI5 interface based on a 'Tooth Gap' similar method according PSI5 specification, which allows reading and writing the registers as well as permanent programming of the non-volatile OTP memory (One Time Programmable).

By default the AS5172 is in the so-called Communication Mode . In this mode, it is possible to configure the register settings.

A voltage modulation on the supply lines (VDD and GND) is used to realize a Programmer-toSensor communication. The Sensor-to-Programmer communication is done with current modulation.

The physical layer of the two communication modes is shown in Figure 6 and Figure 7 below.

Downloaded from Arrow.com.

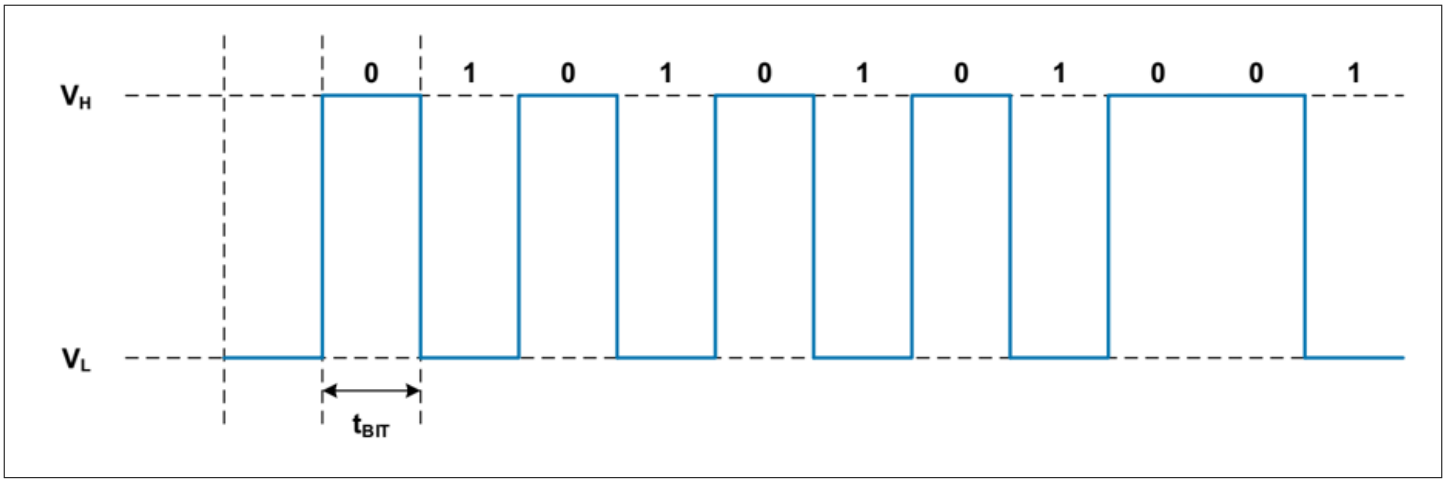

Figure 6 Bit encoding of programmer-to-sensor communication

A logical '0' is represented by a sync pulse (V_H) on the VDD line for a duration of t_{BIT}. A logical '1' by the absence of the sync pulse (V_L) for a duration of t_{BIT}.

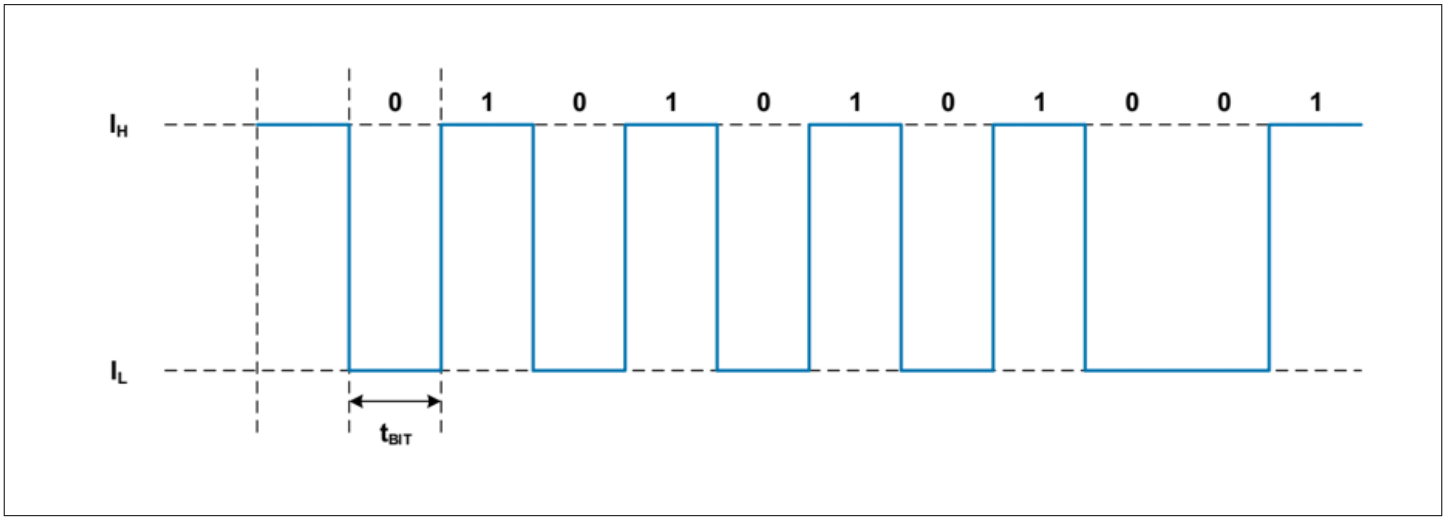

Figure 7 Bit encoding of sensor-to-programmer communication

A logical '0' is represented by an increased sink current (I_H) on the VDD line for a duration of t_{BIT}. A logical '1' by normal sink current (I_H) for a duration of t_{BIT}.

Table 16 UART-over-PSI5 protocol

Symbol	Parameter	Condition	Min.	Typ.	Max.	Unit
V_H	High level voltage		11		12	V
V_L	Low level voltage		5.5		6	V
I_H	High level sink current	Typical value		49		mA
I_L	Low level sink current	Typical value		19		mA
t_{BIT}			25.6	26	26.5	µs
Baudrate			37800	38400	39000	Baud

For further information please refer to application note AN_AS5172_Programming_Procedure_V1-00

Downloaded from Arrow.com.

Infineon also provides a programmer which supports the above-mentioned protocol. Please get in contact with the application engineering team.

7.5 UART protocol

The UART interface allows reading and writing two consecutive addresses. The standard UART sequence consists of four frames. Each frame begins with a start bit (START), which is followed by 8 data bits (D[0:7]), one parity bit (PAR), and a stop bit (STOP), as shown in Figure 8.

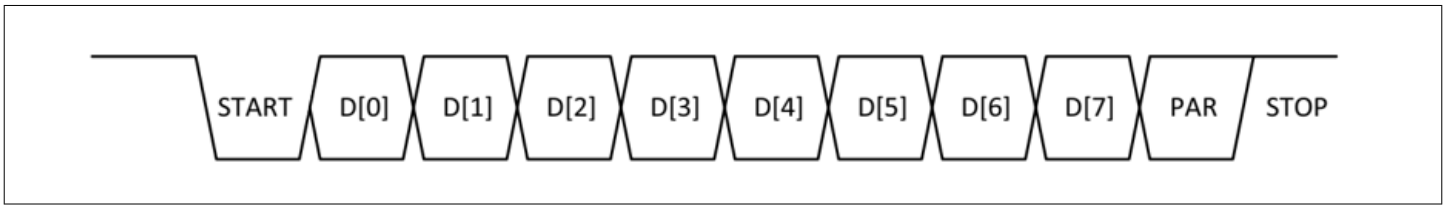

Figure 8 UART protocol frame

The PAR bit is even parity calculated over the data bits (D[7:0]). Each frame is transferred from LSB to MSB.

The first frame is the synchronization frame and consists D[7:0] = 0x55. This frame synchronizes the baud rate between the AS5172 and the programmer.

The second frame contains the register address (D[6:0] = ADDRESS) and the write/read command (WRITE: D[7]=0; READ: D[7]=1).

The third and fourth frame will be written/read to/from the location specified by ADDRESS and ADDRESS+1, respectively.

Figure 9 and Figure 10 show examples of a WRITE and READ sequence.

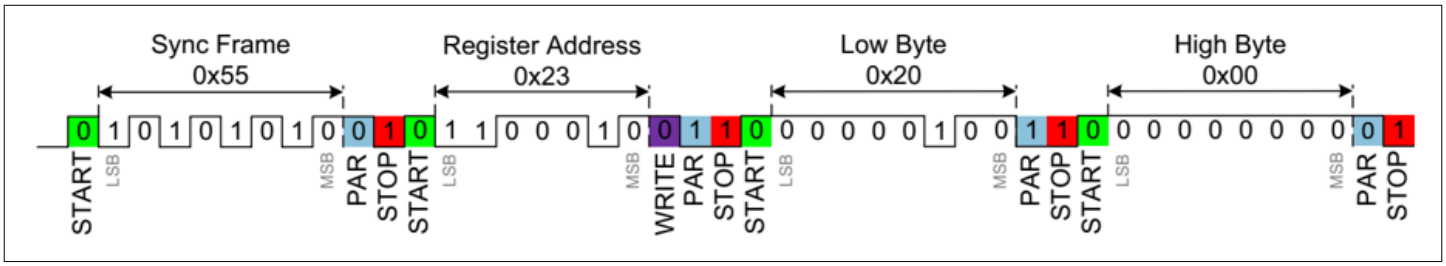

Figure 9 Example of WRITE (Reg[0x23] = 0x20 and Reg [0x24] = 0x00)

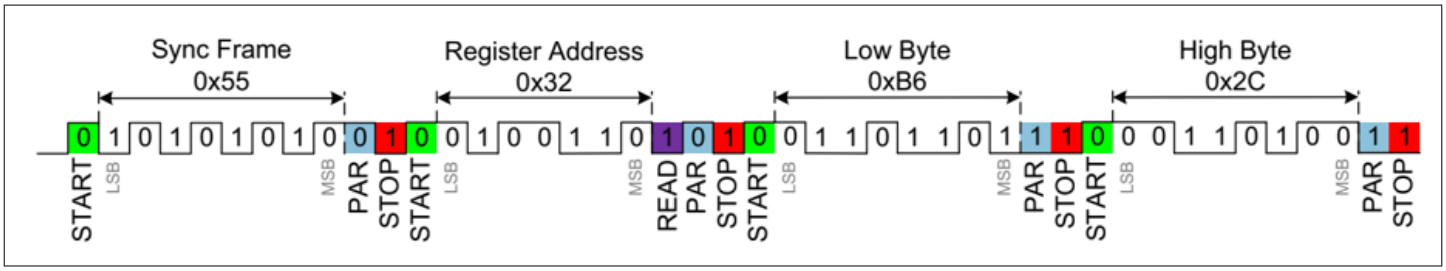

Figure 10 Example of READ (Reg[0x32] = 0xB6 and Reg [0x33] = 0x2C)

7.5.1 Reading of the 14-bit angle information

To read the current position of the magnet (Angle) the following procedure is necessary:

1. Set the DSP_reset bit in Reg(0x23) to 1 (WRITE Reg(0x23) = 0x20)
2. Read Angle_CORDIC register (READ Reg(0x32) and Reg(0x33))
3. Set the DSP_reset bit in Reg(0x23) to 0 (WRITE Reg(0x23) = 0x00)

Downloaded from Arrow.com.

The DSP_reset bit resets the internal DSP. After a reset, the Angle_CORDIC register is updated.

7.5.2 Reading the magnitude and AGC

To read the current Magnitude and AGC value following procedure is necessary:

1. Set the DSP_reset bit in Reg(0x23) to 1 (WRITE Reg(0x23) = 0x20)
2. Read Magnitude and AGC register (READ Reg(0x34) and Reg(0x35))
3. Set the DSP_reset bit in Reg(0x23) to 0 (WRITE Reg(0x23) = 0x00)

The DSP_reset bit resets the internal DSP. After a reset, the Magnitude and AGC registers are updated.

7.5.3 Exiting the communication mode

To exit the Communication Mode and enter Functional Mode a special Pass-to-function command is necessary. Therefore a specific value has to be written into registers 0x60 and 0x61.

Pass2Function: WRITE Reg(0x60) = 0x70 and Reg(0x61) = 0x51

The device is temporarily set to operational mode until a sensor reset happens.

7.5.4 Burn the OTP registers

To permanently program the device a special BurnOTP command is necessary. Therefore a specific value has to be written into registers 0x62 and 0x63.

BurnOTP: WRITE Reg(0x62) = 0x70 and Reg(0x63) = 0x51

This commands permanently burns the OTP memory based on poly silicon fuses. After fusing a verification of the burn quality is mandatory to avoid bit-flips over temperature and lifetime. This can be done with the GLoad operation. For further information please refer to application note AN_AS5172_Programming_Procedure_V1-00.

7.5.5 AS5172 transfer function

After programming the Customer_lock in the OTP or by using the Pass-to-function command the AS5172 is working in the selected PSI5 mode over the VDD pin.

The DSP block generates a linear transfer function proportional to the angle of the rotating magnet which is fed into the PSI5 interface. The PSI5 interface works with 10-bit resolution in PSI5 V1.3 and 12-bit resolution in PSI5 V2.1. Figure 11 shows the transfer function in detail.

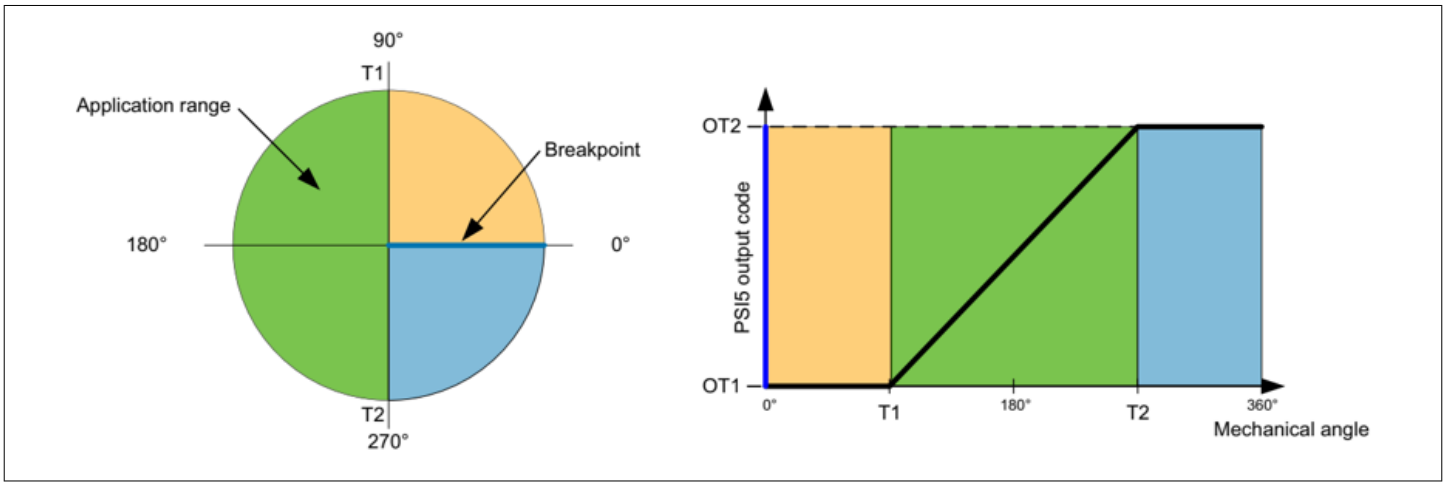

Figure 11 Transfer function

Downloaded from Arrow.com.

Table 17 PSI5 protocol output resolution

Symbol	Parameter	Condition	Value	Unit
OTR_V1.3	Output resolution PSI5 V1.3	PSI5 V1.3	10	Bit
OT1			–480	LSB
OT2			+480	LSB
OTR_V2.1	Output Resolution PSI5 V2.1	PSI5 V2.1	12	Bit
OT1			–2048	LSB
OT2			+2048	LSB

The PSI5 output characteristic is programmable in the OTP memory. The parameters T1, T2 and BP define the linear transfer function. Figure 11 shows a simple example of a typical output function.

The mechanical starting point T1 and the mechanical end point T2 define the mechanical range. The BP (Breakpoint) defines the transition point between OT1 and OT2.

These parameters are input parameters. Using a DLL provided by Infineon, these parameters are converted into the final OTP parameters: CLH, CLL, Offset, Gain and BP.

For detailed information regarding the calculation DLL please get in contact with the application engineering team at Infineon.

7.6 Multiple quadrants

The multiple quadrant option allows repeating the same output slope up to four times over a full 360° rotation as shown in Figure 12, Figure 13, Figure 14 and Figure 15. The Quadrant bits in register (0x13) set the number of quadrant as shown in Table 18. Additionally a built-in quadrant detection can indicate the currently active quadrant in a special PSI5 data frame.

For more information please refer to chapter PSI5 modes.

Table 18 Quadrant selection

Quadrant	Number of quadrants	Max. mechanical range
00	Single	360°
01	Dual	180°
10	Triple	120°
11	Quadruple	90°

Downloaded from Arrow.com.

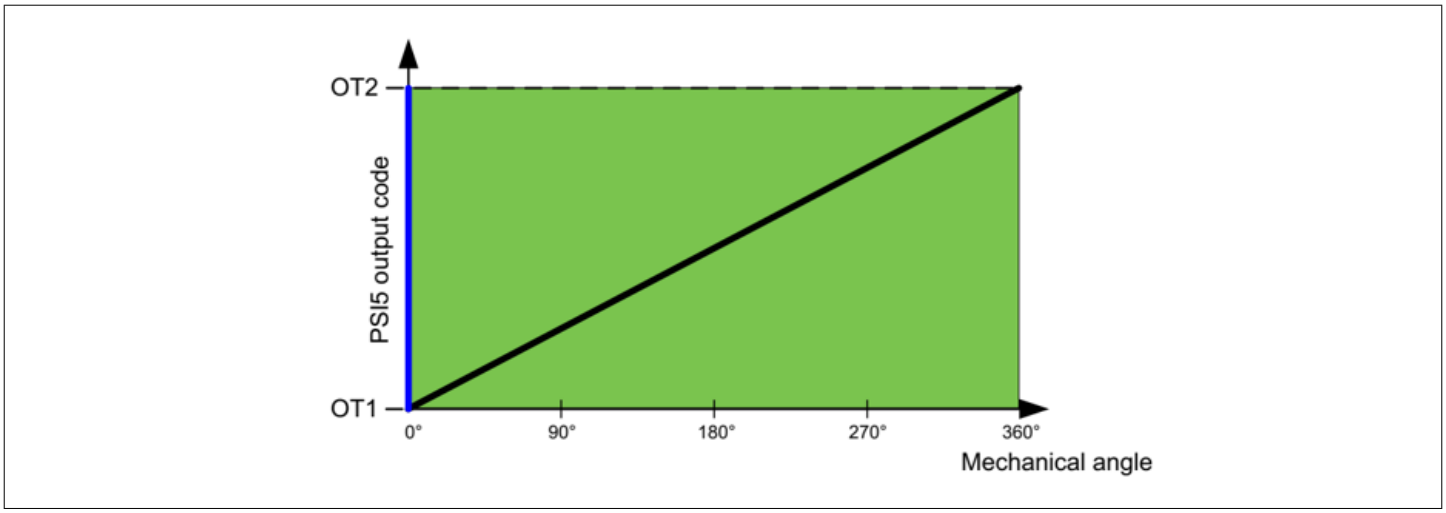

Figure 12 Single quadrant

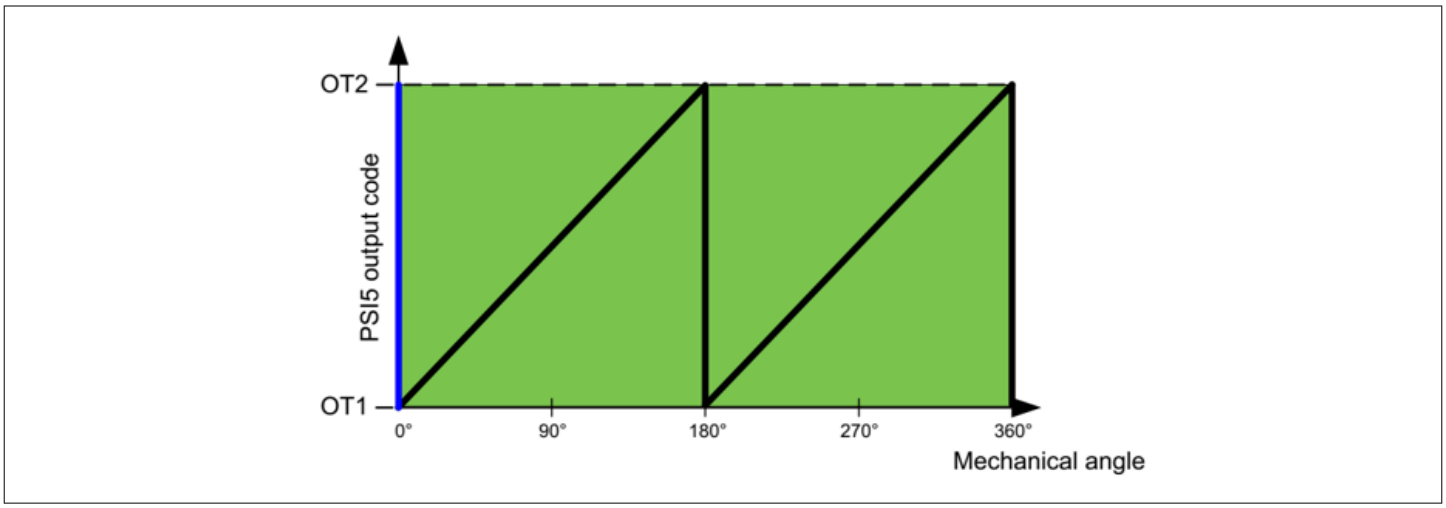

Figure 13 Dual quadrant

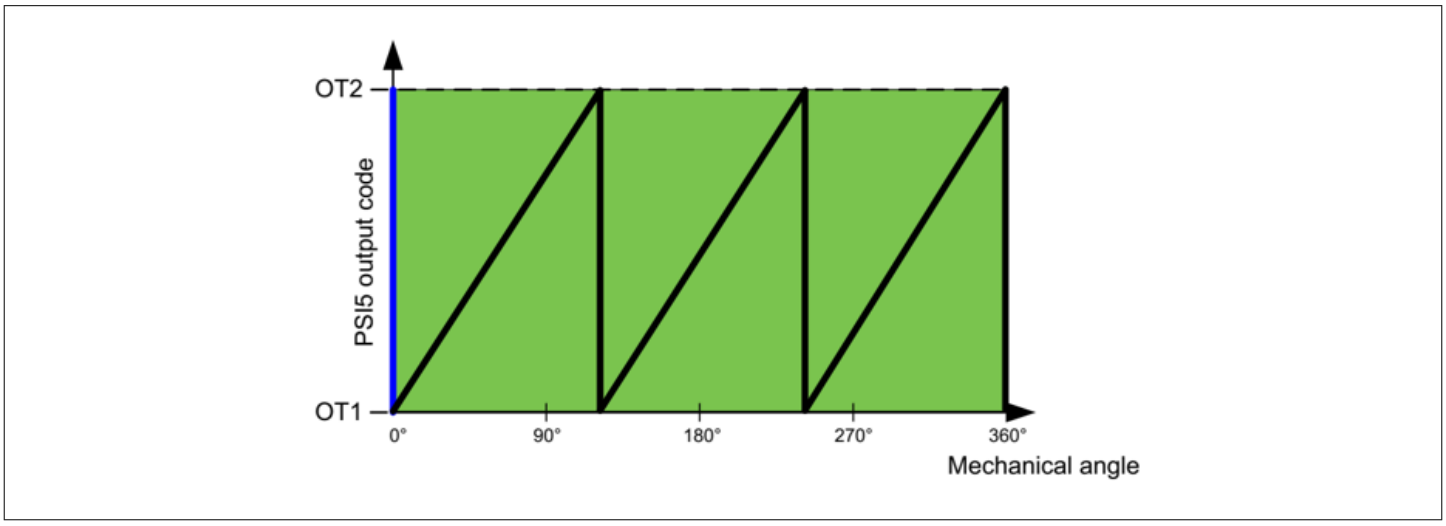

Figure 14 Triple quadrant

Downloaded from Arrow.com.

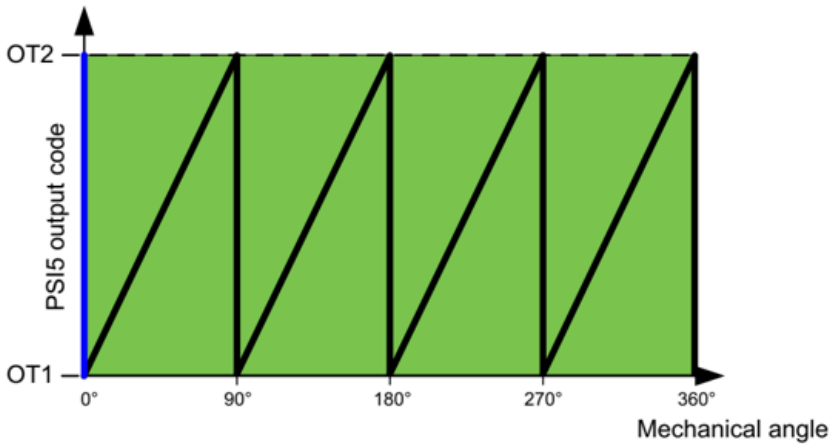

Figure 15 Quadruple quadrant

7.6.1 Extended magnetic input range

By default the AS5172B operates in Extended Mode. This mode extends the magnetic input field range and allows increasing of the air gap between sensor and magnet. The extended range can be disabled with Extended_range_disable bit. For further information about the Extended Mode please refer to application note 'AN_AS5172_ExtendedMode_V1-00.pdf'.

7.6.2 Rolling counter

The frame control bits in the PSI5 frame can be used as a rolling counter. This setting can be enabled in the OTP. If this setting is enabled the rolling counter starts incrementing from value 0x0 once the initialization is finished. When reaching a value of 0x7 the counter is reset at starts with 0x0 again.

In PSI5 16-bit frame mode, the rolling count enables a toggle bit in A14 of the frame.

7.6.3 Special functions

The AS5172 features special functions which can be activated in the OTP. This settings are not according the PSI5 V2.1 standard.

7.6.4 14-bit mode

The 14-bit mode is only available for AS5172B. In this mode the 14-bit angle information is provided on the PSI5 interface. The 14-bit mode can be activated by PSI5_14bit_angle bit (Quadrant setting must be 00).

This special setting works different to the typical AS5172 transfer function.

If this mode is activated, the sensor uses registers 0x1B to 0x1D as zero offset registers. Additionally the bit direction in register 0x01 changes the direction of the output function.

Table 19 PSI5 protocol output resolution

Quadrant	Parameter	Condition	Value	Unit
OTR_14	Output resolution 14-bit mode	PSI5 V2.1	14	Bit
OT1			–8192	LSB
OT2			+8192	LSB

Downloaded from Arrow.com.

7.6.5 Quadrant detection

The PSI5 protocol includes an information of the used quadrant. Detection necessary for safety relevant application to detect a movement from one quadrant to the next. See detailed protocol information.

7.6.6 Extended PSI5 initialization phase

Extending to 32 datablock during Init phase. D1 to D22 according Table 39. D23 to D32 = 0000. Extension necessary for systems with 32 Datablocks during Init Phase.

7.7 PSI5 interface

7.7.1 Bit encoding - AS5172 to ECU communication

A 'low' level ($I_{S,Low}$) is represented by the normal (quiescent) current consumption of the Sensor(s). A 'high' level ($I_{S,High}$) is generated by an increased current sink of the Sensor ($I_{S,Low} + \Delta I_S$). The current modulation is detected within the receiver Sensor.

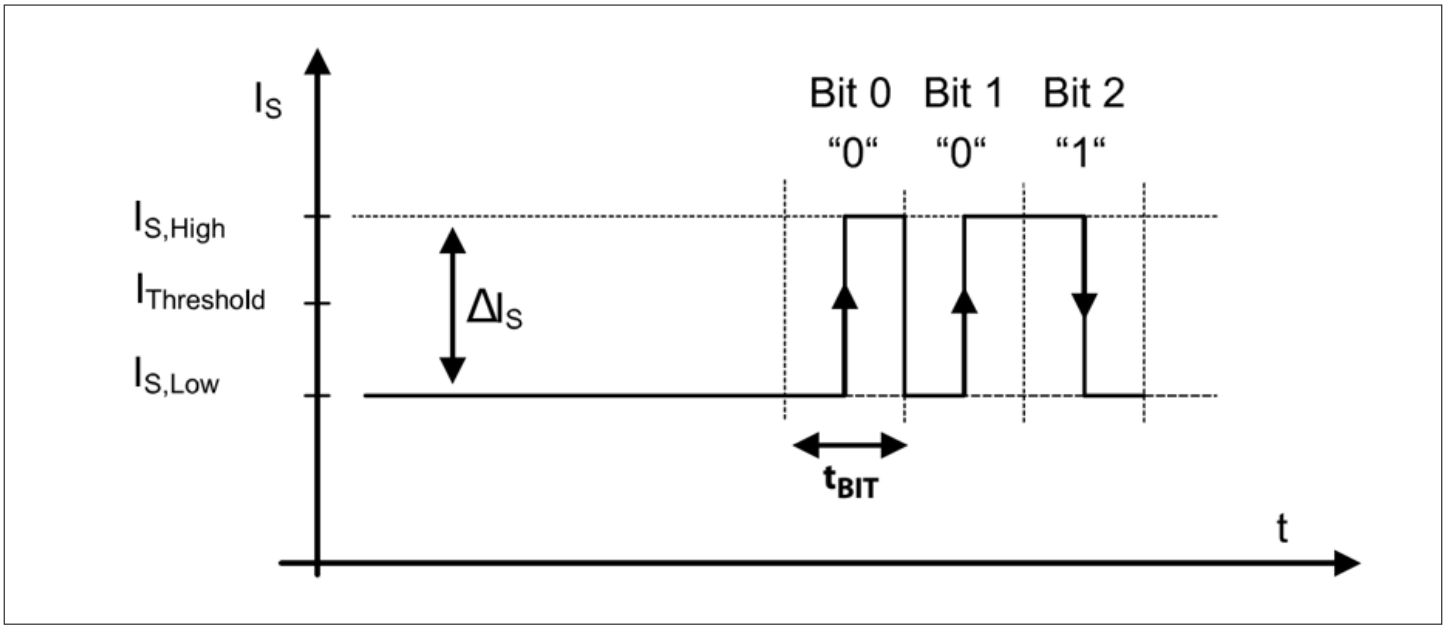

Figure 16 Bit encoding using supply current modulation

Manchester coding is used for data transmission. A logic '0' is represented by a rising slope and a logic '1' by a falling slope of the current in the middle of tBit.

Table 20 Bit encoding timing

Symbol	Parameter	Min.	Typ.	Max.	Unit	Comments
t_{Bit_L}	Bit time (125 kbit/s mode)		8		µs	16 CLK cycles of the internal 2 MHz clock
t_{Bit_H}	Bit time (189 kbit/s mode)		5.3		µs	14 CLK cycles of the internal 2.67 MHz clock

Downloaded from Arrow.com.

7.7.2 Data frames - AS5172 to ECU communication

Each PSI5 data frame consists of N bits containing two start bits and one parity bit with even parity (or 3 CRC bits) and N-3 (N-5) data bits. Data bits are transmitted LSB first. The data frames are sent periodically from the sensor to the ECU. A minimum gap time t_{Gap} larger than one maximum bit duration t_{Bit} is required between two data frames.

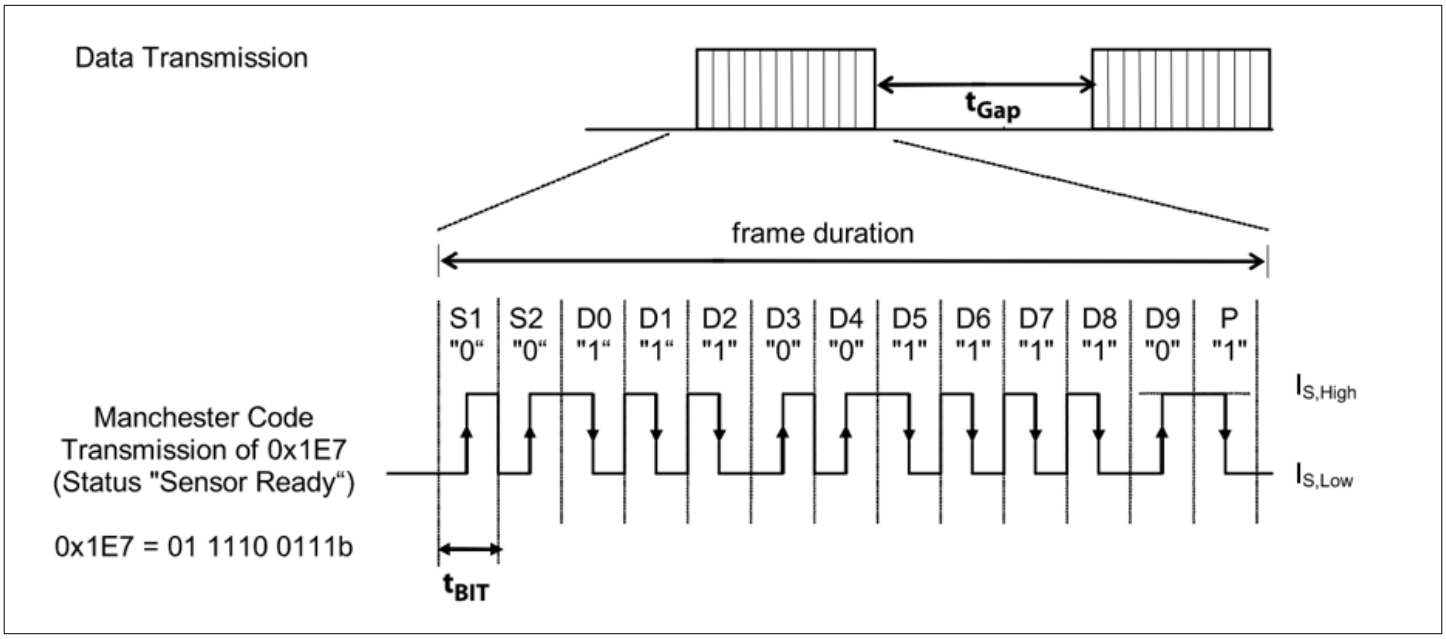

Figure 17 Example of a 10-bit frame

7.7.3 Data ranges

The AS5172 supports the data range according PSI5 standard V2.1 and V1.3.

PSI5 data messages are divided into three separate ranges: A data range for the sensor output signal, a range for status and error messages and a range for initialization data.

7.7.4 Data range according PSI5 V1.3

If AS5172 is used in the 10-bit mode, the decimal values –480 to +480 are used for the sensor output signal. The range –512 to –481 is reserved block and data IDs which are used for transmitting initialization data during startup of the AS5172. The range from +481 to +511 is used for status and error messages.

The 10 bit data range is used only in the LowRes mode of the sensor. The 12-bit output value from the DSP has to be mapped to the data range of -480 to +480 (10 bit, signed) by taking only the 10 higher order bits, subtracting the mid-code, and apply clamping to the data range of -480 to +480.

Table 21 Data range for 10-bit mode

Dec	Hex	Signification	Range	
+511	0x1FF	Reserved (ECU internal use) *1	Status and Error Messages	2
:	:	Reserved (ECU internal use) *1		
+504	0x1F8	Reserved (ECU internal use) *1		
+503	0x1F7	Reserved (Sensor use) *2		
+502	0x1F6	Reserved (Sensor use) *2		

(table continues...)

Downloaded from Arrow.com.

Table 21 (continued) Data range for 10-bit mode

Dec	Hex	Signification	Range	
+501	0x1F5	Reserved (Sensor use) *2		
+500	0x1F4	'Sensor Defect'		
+499	0x1F3	Reserved (ECU internal use) *1		
:	:	Reserved (ECU internal use) *1		
+496	0x1F0	Reserved (ECU internal use) *1		
+495	0x1EF	Reserved (Sensor use) *2		
:	:	Reserved (Sensor use) *2		
+489	0x1E9	Sensor in Diagnostic Mode		
+488	0x1E8	Sensor Busy		
+487	0x1E7	Sensor Ready		
+486	0x1E6	Sensor Ready but Unlocked		
+485	0x1E5	Reserved (Sensor use) *2		
+484	0x1E4	Reserved (Sensor use) *2		
+483	0x1E3	Reserved (Sensor use) *2		
+482	0x1E2	Bidirectional Communication: RC Error		
+481	0x1E1	Bidirectional Communication: RC OK		
+480	0x1E0	Highest Positive Sensor Signal		
:	:	:		
0	0x000	Signal Amplitude '0'	Sensor Output Signal	1
:	:	:		
–480	0x220	Highest Negative Sensor Signal		
–481	0x21F	Status Data 1111		
:	:	:		
–496	0x210	Status Data 0000		
–497	0x20F	Block ID 16	Block ID's and Data for Initialization	3
:	:	:		
–512	0x200	Block ID 1		

When using the AS5172 in 10-bit mode the data frame consists of 2 start bits (S1, S2), 10 data bits (D0-D9) which represent the angle and an even parity bit (P).

Table 22 Data frame for 10-bit mode

Start bits		10-bit sensor data (LSB first)										Parity
S1	S2	A0	A1	A2	A3	A4	A5	A6	A7	A8	A9	P

(table continues...)

Downloaded from Arrow.com.

Table 22 (continued) Data frame for 10-bit mode

Start bits		10-bit sensor data (LSB first)										Parity
0	0	D0	D1	D2	D3	D4	D5	D6	D7	D8	D9	P

The AS5172 has also the possibility to provide the 12-bit angle value in the PSI5 V1.3 specification.

The substandard vehicle describes this method to map a 12-bit word into a 16-bit data frame and splitting of this into two 10-bit frames.

7.7.4.1 Data range according PSI5 V2.1

If AS5172 is used in the 20-bit mode, the decimal values -30720 to +30720 are used for the sensor output signal. The range -32768 to -30784 is reserved block and data IDs which are used for transmitting initialization data during startup of the AS5172. The range from +31168 to +32767 is used for status and error messages.

Table 23 Data range for 20-bit mode

Dec	Hex	Signification	Range	
32767	0x7FFF	Reserved (ECU internal use)	Status and Error Messages	2
+31168	0x79C0	Sensor Ready		
:	:			
+30720	0x7800	Highest Positive Sensor Signal	Sensor Output Signal	1
:	:	:		
0	0x0000	Signal Amplitude '0'		
:	:	:		
–30720	0x8800	Highest Negative Sensor Signal		
–30784	0x87C0	Status Data 1111	Block ID's and Data for Initialization	3
:	:	:		
–31744	0x8400	Status Data 0000		
–31808	0x83C0	Block ID 16		
:	:	:		
–32768	0x8000	Block ID 1		

7.7.4.2 PSI5 data frame 20-bit mode with 12-bit sensor data

In 20-bit mode the PSI5 frame consists of 2 start bits (S1, S2), 3 frame control bits (F0, F1, F2), an error status bit (E0), 16 data bits (A0 to A15), and 3 CRC bits (C2, C1, C0).

As described in chapter Rolling counter the 3 frame control bits can be used as rolling counter. The error status bit is used to indicate a failure of the sensor to ECU (E0 = 1). If no failure is present this bit is always set to 0. The 12-bit angle information is transmitted on A0 - A11. The upper fields A12 - A15 are set to 0.

Downloaded from Arrow.com.

Table 24 PSI5 data frame 20-bit mode with 12-bit sensor data

Start bits		Frame control			Error status	12-bit sensor data (lsb first)																CRC		
S1	**S2**	**F0**	**F1**	**F2**	**E0**	**A0**	**A1**	**A2**	**A3**	**A4**	**A5**	**A6**	**A7**	**A8**	**A9**	**A10**	**A11**	**A12**	**A13**	**A14**	**A15**	**C2**	**C1**	**C0**
0	0	C0	C1	C2	E0	D0	D1	D2	D3	D4	D5	D6	D7	D8	D9	D10	D11	0	0	0	0	C2	C1	C0

7.7.4.3 PSI5 data frame 20-bit mode with 12-bit sensor data and quadrant detection

For safety relevant applications, where multiple quadrant mode is used, additionally to the 12-bit angle information a quadrant information can be transmitted in A12 and A13. For more information refer to chapter Multiple quadrants.

Table 25 PSI5 data frame 20-bit mode with 12-bit sensor data and quadrant detection

Start bits		Frame control			Error status	12-bit sensor data (LSB first)												Quadrant info			CRC			
S1	S2	F0	F1	F2	E0	A0	A1	A2	A3	A4	A5	A6	A7	A8	A9	A10	A11	A12	A13	A14	A15	C2	C1	C0
0	0	C0	C1	C2	E0	D0	D1	D2	D3	D4	D5	D6	D7	D8	D9	D10	D11	Q0	Q1	0	0	C2	C1	C0

Table 26 Quadrant information

Quadrant	Quadrant mode	Quadrant info on PSI5
00	Single	Q1 = 00 Q2 = 01
01	Dual	Q1 = 00 Q2 = 01
10	Triple	Q1 = 00 Q2 = 01 Q3 = 10
11	Quadruple	Q1 = 00 Q2 = 01 Q3 = 10 Q4 = 11

7.7.4.4 PSI5 data frame 20-bit mode with 14-bit sensor data

For special applications where the full sensor resolution is necessary over a 360° rotation the AS5172 features a special 14-bit mode. In this mode the 14-bit angle information is transmitted from A0 - A13. A14 and A15 are filled with 0. For more information refer to chapter 14-bit mode.

Downloaded from Arrow.com.

Table 27 PSI5 data frame 20-bit frame 20-bit mode with 14-bit sensor data

Start bits		Frame control			Error status	14-bit sensor data (LSB first)														CRC		
S1	**S2**	**F0**	**F1**	**F2**	**E0**	**A0**	**A1**	**A2**	**A3**	**A4**	**A5**	**A7**	**A8**	**A9**	**A10**	**A11**	**A12**	**A13**	**A14**	**A15**	**C2**	**C1**	**C0**
0	0	C0	C1	C2	E0	D0	D1	D2	D3	D4	D5	D7	D8	D9	D10	D11	D12	D13	0	0	C2	C1	C0

7.7.4.5 PSI5 data frame 16-bit mode

In 16-bit mode the PSI5 frame consists of 2 start bits (S1, S2), an error status bit (E0), 15 data bits (A0 to A14), and 3 CRC bits (C2, C1, C0).

The error status bit is used to indicate a failure of the sensor to ECU (E0 = 1). If no failure is present this bit is always set to 0. The 16-bit frame can transmit the 12-bit angle information (A0 - A11) but also the 14-bit angle by activating the 14-bit mode in the OTP. (A0 - A13). The field A14 is by default set to 0 but can also be used as a toggle bit by activating the Rolling Counter.

Table 28 PSI5 data frame 16-bit mode with 12-bit sensor data

Start bits		Error status	14-bit sensor data (LSB first)															CRC		
S1	S2	E0	A0	A1	A2	A3	A4	A5	A6	A7	A8	A9	A10	A11	A12	A13	A14	C2	C1	C0
0	0	E0	D0	D1	D2	D3	D4	D5	D6	D7	D8	D9	D10	D11	D12	D13	0	C2	C1	C0

7.7.5 PSI5 modes

The AS5172 can be configured in several PSI5 modes according standard V1.3 and V2.1. This modes can be selected via registers 0x01, 0x11 and 0x12. The tables in PSI5 data frame 20-bit mode with 12-bit sensor data and PSI5 data frame 20-bit mode with 12-bit sensor data and quadrant detection show the different modes.

Independent from the specific mode also other options can be activated in this registers:

- Low power mode (set bit[2] in register 0x11)
- Initialization phase repetition factor
- Extended Initialization phase (32 blocks)
- Rolling counter (set bit[7] in register 0x11)
- 14-bit mode

Table 29 PSI5 modes V1.3

PSI5 mode	Timeslot	Discharge	High resolution	Register	
				0x11	**0x12**
P10P-500/3L	Timeslot 1	-	-	0x00	0x00
P10P-500/3L	Timeslot 2	-	-	0x00	0x08
P10P-500/3L	Timeslot 3	-	-	0x00	0x10
P10P-500/3L	Timeslot 2	X	-	0x00	0x09

(table continues...)

Downloaded from Arrow.com.

Table 29 (continued) PSI5 modes V1.3

PSI5 mode	Timeslot	Discharge	High resolution	Register	
				0x11	0x12
P10P-500/3L	Timeslot 3	X	-	0x00	0x11
P10P-500/3L	Timeslot 1 and 2	-	X	0x40	0x00
P10P-500/3L	Timeslot 2 and 3	-	X	0x40	0x08
P10P-500/3L	Timeslot 2 and 3	X	X	0x40	0x09
A10P-500/1L	-	-	-	0x10	0x00
A10P-250/1L	-	-	-	0x30	0x00
A10P-500/1L	-	-	X	0x50	0x00
A10P-250/1L	-	-	X	0x70	0x00

Table 30 PSI5 modes V2.1

PSI5 mode	Timeslot	Register		
		0x01	0x11	0x12
P20CRC-500/1L	Timeslot 1	0x00	0x02	0x00
P20CRC-500/2L	Timeslot 2	0x00	0x02	0x08
P20CRC-500/2H	Timeslot 1	0x00	0x03	0x00
P20CRC-500/2H	Timeslot 2	0x00	0x03	0x08
P20CRC-500/3H	Timeslot 1	0x00	0x0B	0x00
P20CRC-500/3H	Timeslot 2	0x00	0x0B	0x08
P20CRC-500/3H	Timeslot 3	0x00	0x0B	0x10
P16CRC-500/3H	Timeslot 1	0x20	0x01	0x00
P16CRC-500/3H	Timeslot 2	0x20	0x01	0x08
P16CRC-500/3H	Timeslot 3	0x20	0x01	0x10
A20CRC-200/1H	-	0x00	0x33	0x00
A20CRC-500/1H	-	0x00	0x13	0x00
A20CRC-500/2H	-	0x00	0x1B	0x00
A20CRC-300/1L	-	0x00	0x12	0x00

7.7.6 PSI5 timing

The following chapter describes the timings for the different PSI5 modes.

The timing is according the internal clock rate of 2 MHz or 2.67 MHz respectively. This clock rates are derived from the main clock of 16 MHz with a ±3.5% variation.

Downloaded from Arrow.com.

7.7.6.1 Timing synchronous mode P10P-500/3L

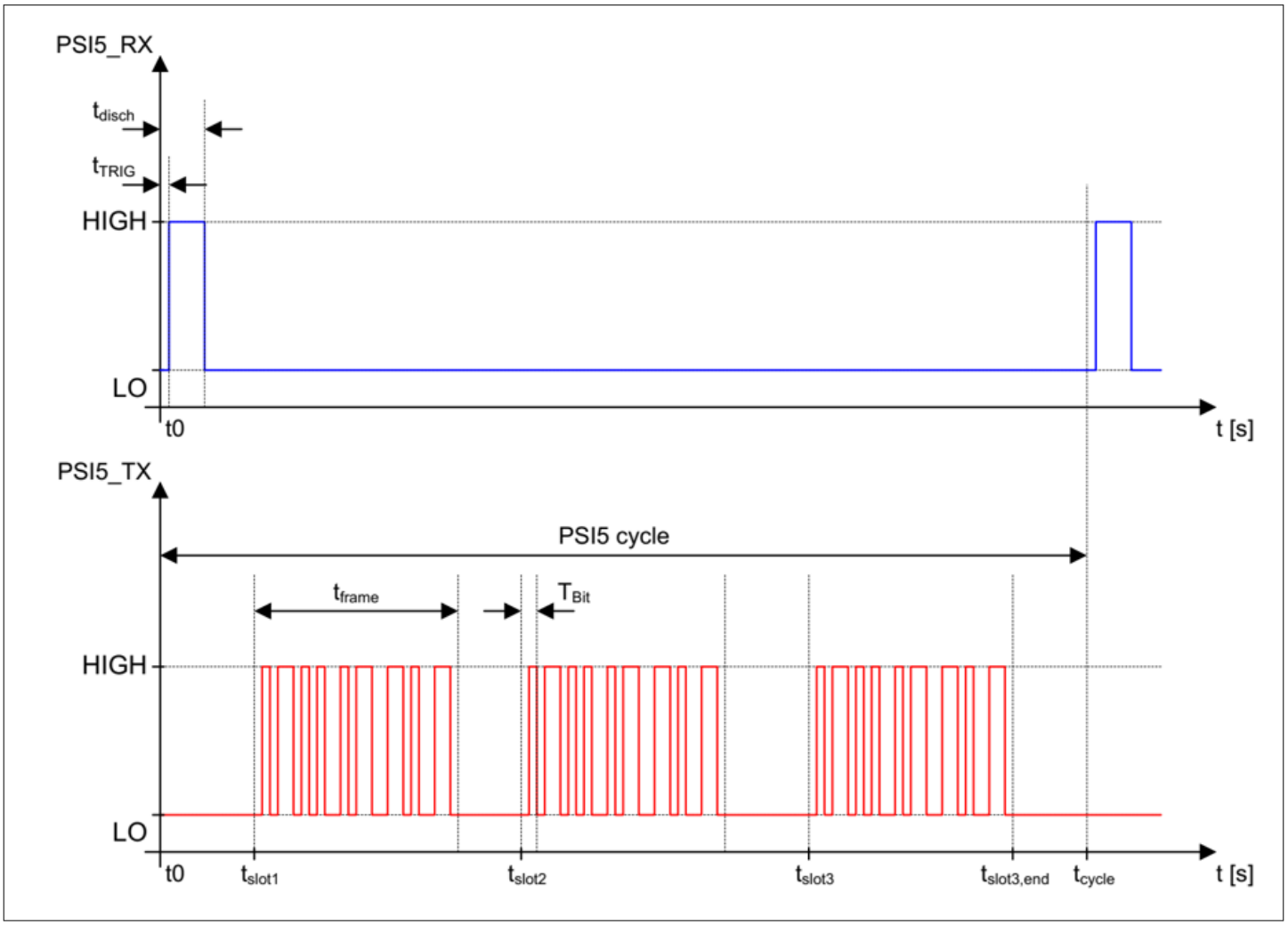

Figure 18 Synchronous mode P10P-500/3L

Table 31 Timings parameters of P10P-500/3L

Symbol	Parameter	Min.	Typ.	Max.	Units	Comments
t_{Bit_L}	Bit time	7.7	8	8.3	µs	16 CLK cycles of the internal 2 MHz clock
t_{frame_10L}	Frame duration	100.4	104	107.6	µs	208 CLK cycles of the internal 2 MHz clock
t_{TRIG}	Trigger detection time	0	4.5	10	µs	From start of synch. pulse
t_{slot1}	Start of time slot 1	44	51	59	µs	88 CLK cycles of the internal 2 MHz clock
t_{slot2}	Start of time slot 2	181.3	195	210	µs	376 CLK cycles of the internal 2 MHz clock

(table continues...)

Downloaded from Arrow.com.

Table 31 (continued) Timings parameters of P10P-500/3L

Symbol	Parameter	Min.	Typ.	Max.	Units	Comments
t_{slot3}	Start of time slot 3	328.9	350	372.8	µs	686 CLK cycles of the internal 2 MHz clock
$t_{slot3,end}$	End of time slot 3	427.7	454	482	µs	
$t_{cycle,P500}$	Cycle time P10P- 500/3L	250	500	-	µs	

7.7.6.2 Timing synchronous mode P10P-500/3L with discharge pulse

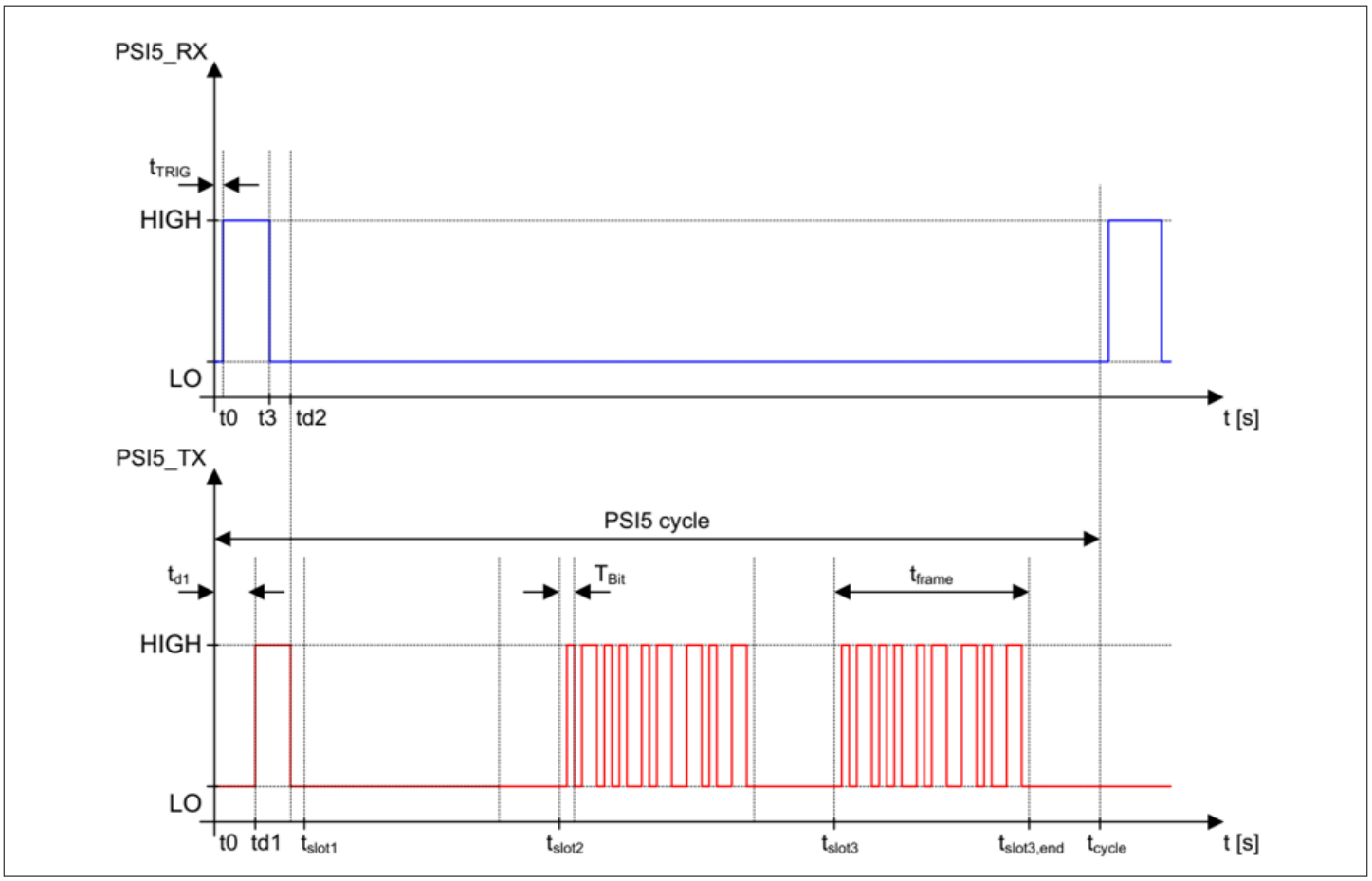

Figure 19 Synchronous mode P10P-500/3L with discharge pulse

Table 32 Timings parameters of P10P-500/3L with discharge pulse

Symbol	Parameter	Min.	Typ.	Max.	Unit	Comments
t_{Bit_L}	Bit time	7.7	8	8.3	µs	16 CLK cycles of the internal 2 MHz clock
t_{frame_10L}	Frame duration	100.4	104	107.6	µs	208 CLK cycles of the internal 2MHz clock

(table continues...)

Downloaded from Arrow.com.

Table 32 (continued) Timings parameters of P10P-500/3L with discharge pulse

Symbol	Parameter	Min.	Typ.	Max.	Unit	Comments
t_{TRIG}	Trigger detection time	0	3.25	7.5	µs	From start of synch. pulse
td1	Signal discharge	18.5	22.75	28	µs	39 CLK cycles of the internal 2 MHz clock
td2	Discharge stop time	38	43.25	50	µs	80 CLK cycles of the internal 2 MHz clock
t_{slot1}	Start of time slot 1	44	51	59	µs	88 CLK cycles of the internal 2 MHz clock
t_{slot2}	Start of time slot 2	181.3	195	210	µs	376 CLK cycles of the internal 2 MHz clock
t_{slot3}	Start of time slot 3	328.9	350	372.8	µs	686 CLK cycles of the internal 2 MHz clock
$t_{slot3,end}$	End of time slot 3	427.7	454	482	µs	
$t_{cycle,P500}$	Cycle time P10P-500/3L	250	500	-	µs	

7.7.6.3 Timing asynchronous modes A10P-250/1L and A10P-500/1L

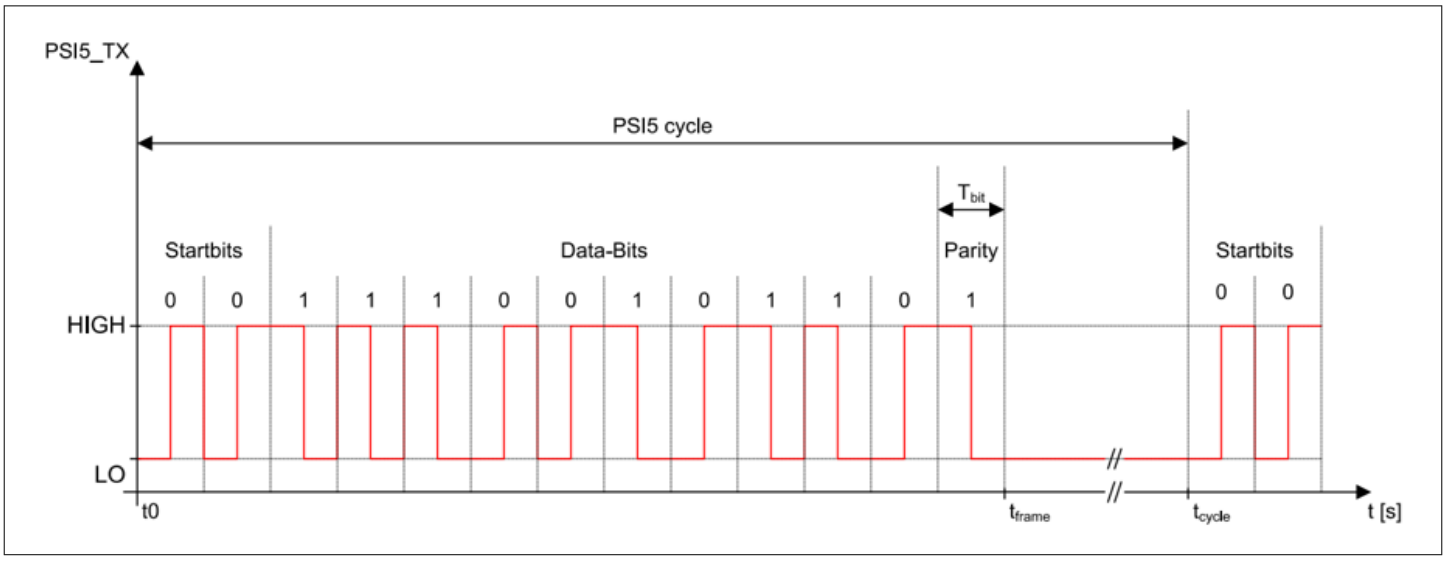

Figure 20 Asynchronous modes A10P- 50/1L and A10P-500/1L

Table 33 Timings parameters of A10P- 50/1L and A10P-500/1L

Symbol	Parameter	Min.	Typ.	Max.	Unit	Comments
t_{Bit_L}	Bit Time	7.7	8	8.3	µs	16 CLK cycles of the internal 2 MHz clock

(table continues...)

Downloaded from Arrow.com.

Table 33 (continued) Timings parameters of A10P- 50/1L and A10P-500/1L

Symbol	Parameter	Min.	Typ.	Max.	Unit	Comments
t_{frame_10L}	Frame Duration	100.4	104	107.6	µs	208 CLK cycles of the internal 2 MHz clock
$t_{cycle,250L}$	Cycle Time A10P-250/1L	241.2	250	258.8	µs	500 CLK cycles of the internal 2 MHz clock
$t_{cycle,500L}$	Cycle Time A10P-500/1L	482.5	500	517.5	µs	1000 CLK cycles of the internal 2 MHz clock

Table 34 Timing parameters of synchronous modes P20CRC-500/1L,P20CRC-500/2L, P20CRC-500/2H, P20CRC-500/3H

Symbol	Parameter	Min.	Typ.	Max.	Unit	Comments
t_{Bit_L}	Bit Time P20CRC-500/1L/2L	7.7	8	8.3	µs	16 CLK cycles of the internal 2 MHz clock
t_{frame_20L}	Frame Duration P20CRC-500/1L/2L	193	200	207	µs	400 CLK cycles of the internal 2 MHz clock
T_{Bit_H}	Bit Time P20CRC-500/2H/3H	5.06	5.25	5.44	µs	14 CLK cycles of the internal 2.67 MHz clock
t_{frame_20H}	Frame Duration P20CRC-500/2H/3H	126.66	131.25	135.84	µs	350 CLK cycles of the internal 2.67 MHz clock
t_{TRIG}	Trigger Detection Time	0	4.5	10	µs	From start of synch. pulse
t_{slot1_20L}	Start of Time Slot 1 P20CRC- 500/1L/2L	44	48.5	56	µs	88 CLK cycles of the internal 2 MHz clock
$t_{slot1_20L,end}$	End of Time Slot 1 P20CRC- 500/1L/2L	234	251	269	µs	400 CLK cycles of the internal 2 MHz clock
t_{slot1_20H}	Start of Time Slot 1 P20CRC- 500/2H	44	51	59	µs	119 CLK cycles of the internal 2.67 MHz clock
$t_{slot1_20H,end}$	End of Time Slot 1 P20CRC- 500/2H	169	182.25	198	µs	
t_{slot1_20H}	Start of Time Slot 1 P20CRC- 500/3H	44	45	56	µs	112 CLK cycles of the internal 2.67 MHz clock
$t_{slot1_20H,end}$	End of Time Slot 1 P20CRC- 500/3H	175.4	177.5	190.5	µs	
t_{slot2_20L}	Start of Time Slot 2 P20CRC- 500/2L	267.5	273	288	µs	540 CLK cycles of the internal 2 MHz clock
$t_{slot2_20L,end}$	End of Time Slot 2 P20CRC- 500/2L	464	473	492	µs	
t_{slot2_20H}	Start of Time Slot 2 P20CRC- 500/2H	203.5	218.25	235.5	µs	570 CLK cycles of the internal 2.67 MHz clock
$t_{slot2_20H,end}$	End of Time Slot 2 P20CRC- 500/2H	328.5	349.5	374.5	µs	

(table continues...)

Downloaded from Arrow.com.

Table 34 (continued) Timing parameters of synchronous modes P20CRC-500/1L,P20CRC-500/2L, P20CRC-500/2H, P20CRC-500/3H

Symbol	Parameter	Min.	Typ.	Max.	Unit	Comments
t_{slot2_20H}	Start of Time Slot 2 P20CRC- 500/3H	183	186.5	199.5	µs	490 CLK cycles of the internal 2.67 MHz clock
$t_{slot2_20H,end}$	End of Time Slot 2 P20CRC- 500/3H	313.5	319	334	µs	
t_{slot3_20H}	Start of Time Slot 3 P20CRC- 500/3H	336	341.5	357	µs	905 CLK cycles of the internal 2.67 MHz clock
$t_{slot3_20H,end}$	End of Time Slot 3 P20CRC- 500/3H	466.5	474	491.5	µs	
$t_{cycle,P500}$	Cycle Time P20CRC-500/1L/ 2L	270	500	-	µs	
$t_{cycle,P500}$	Cycle Time P20CRC-500/2H/ 3H	250	500	-	µs	

For P16CRC-500/3H mode, bit timings and the frame start timings are the same as of the P20CRC-500/3H mode. All other timings are reported in table below:

Table 35 Distinct timing parameters of P16CRC-500/3H

Symbol	Parameter	Min.	Typ.	Max.	Unit	Comments
t_{frame_16H}	Frame Duration P16CRC-500/ 3H	106.4	110.25	114.1	µs	294 CLK cycles of the internal 2.67 MHz clock
$t_{slot1_16H,end}$	End of Time Slot 1 P16CRC- 500/3H	153.5	156.5	169.5	µs	
$t_{slot2_16H,end}$	End of Time Slot 2 P16CRC- 500/3H	292.5	298	313	µs	
$t_{slot3_16H,end}$	End of Time Slot 3 P16CRC- 500/3H	445.5	453	470.5	µs	

Downloaded from Arrow.com.

7.7.6.4 Timing asynchronous modes A20CRC-200/1H and A20CRC-300/1L

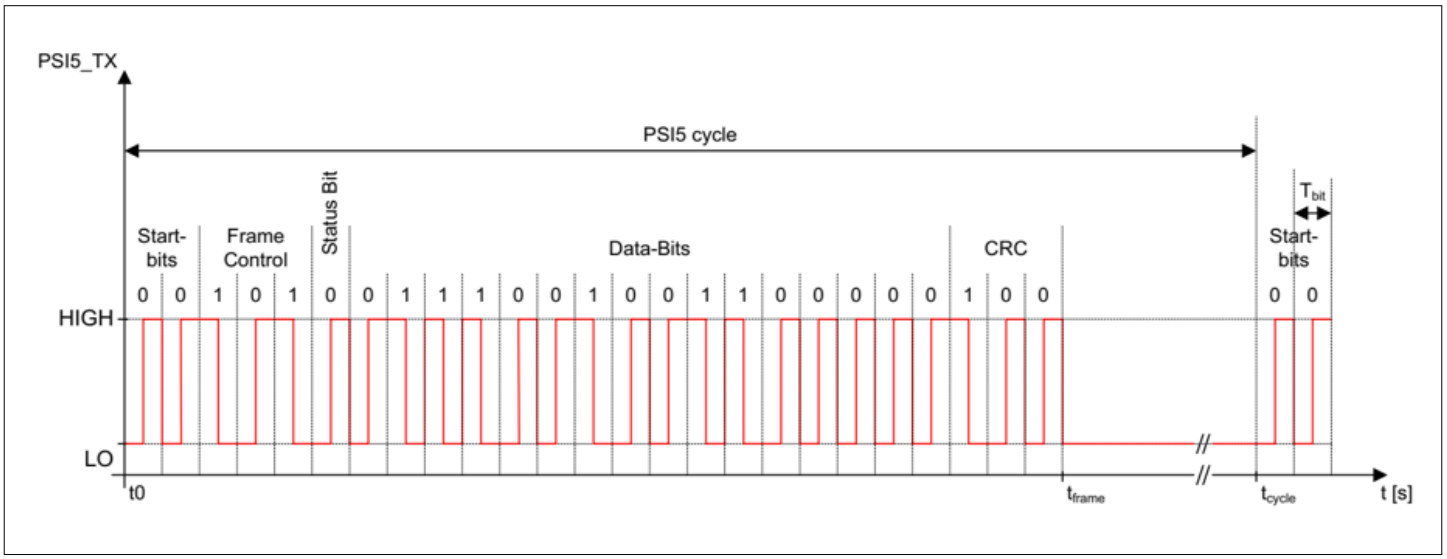

Figure 21 Asynchronous modes A20CRC-200/1H and A20CRC-300/1L

Table 36 Timing parameters of A20CRC-200/1H and A20CRC-300/1L

Symbol	Parameter	Min.	Typ.	Max.	Unit	Comments
t_{Bit_L}	Bit Time A20CRC-300/1L	7.7	8	8.3	µs	16 CLK cycles of the internal 2 MHz clock
t_{frame_20L}	Frame Duration A20CRC-300/1L	193	200	207	µs	400 CLK cycles of the internal 2 MHz clock
$t_{cycle,300L}$	Cycle Time A20CRC-300/1L	298.5	300	310.5	µs	600 CLK cycles of the internal 2 MHz clock
t_{Bit_H}	Bit Time A20CRC-200/1H	5.06	5.25	5.44	µs	14 CLK cycles of the internal 2.67 MHz clock
t_{frame_20H}	Frame Duration A20CRC-200/1H	126.66	131.25	135.84	µs	350 CLK cycles of the internal 2.67 MHz clock
$t_{cycle,200H}$	Cycle Time A20CRC-200/1H	193	200	207	µs	533 CLK cycles of the internal 2.67 MHz clock

7.7.7 PSI5 initialization

The Startup and Initialization is working according the PSI5 standard.

After each power on or undervoltage reset, the AS5172 performs an internal initialization which is divided into three phases:

Downloaded from Arrow.com.

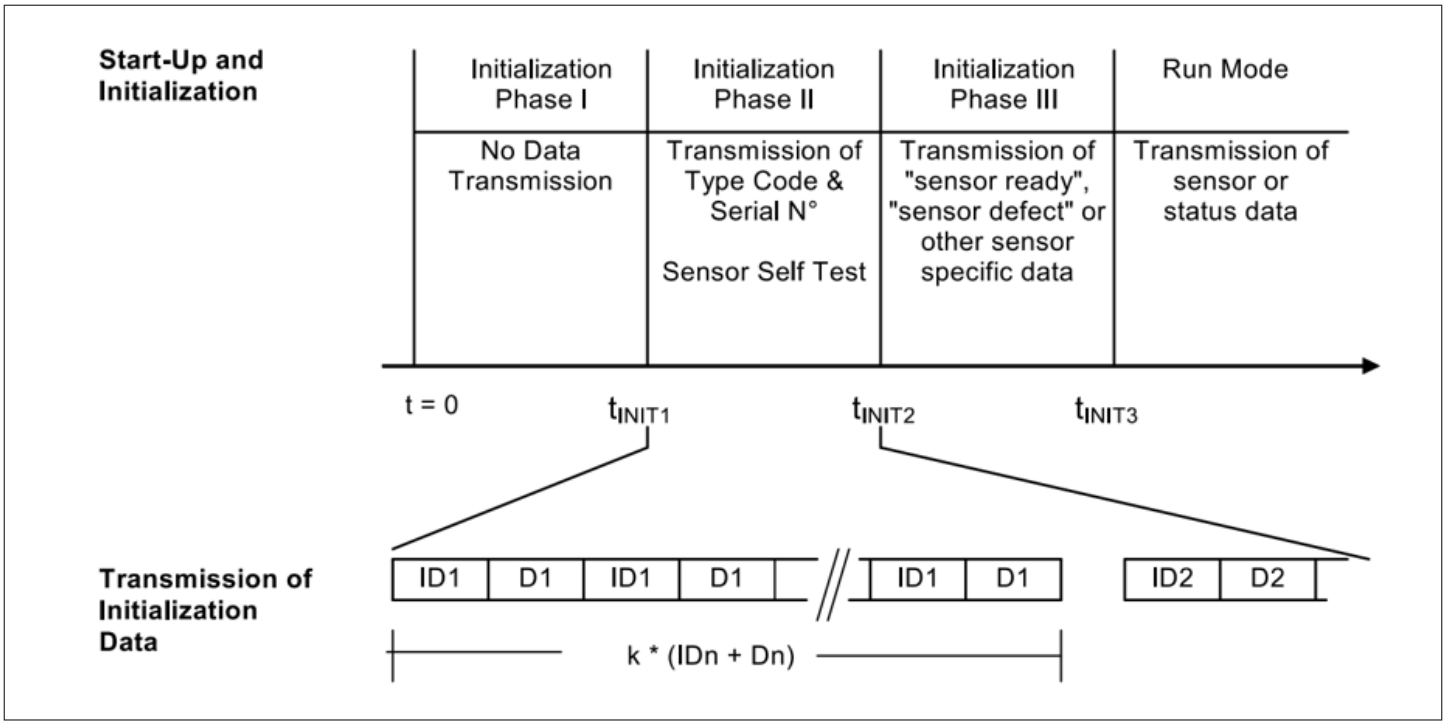

Figure 22 Start-up and initialization

Initialization phase I

During the first initialization phase, no data is transmitted and the ECU can perform a connectivity test. Duration 50 - 150ms; typical 100ms. If using synchronous transmission mode the ECU can terminate the initialization phase I by sending the sync pulse at least 4ms after AS5172 power on.

Initialization phase II

During the second initialization phase, the AS5172 transmits sensor and application specific information to the ECU.

In High Resolution mode the AS5172 transmits the same PSI5 frame on both programmed time slots.

For the 20-bit mode the 10-bit values are extended to 20 bits. This is done by shifting the data bits [9:0] to bits A15 to A6. The remaining 6 LSBs are filled with '0'. The frame control bits (F0 to F2) and the status bit (E0) are at '0'.

Table 37 Initialization phase in 20-bit mode

Start bits		Frame control			Error status	16-bit sensor data (LSB first)																CRC		
S1	S2	F0	F1	F2	E0	A0	A1	A2	A3	A4	A5	A6	A7	A8	A9	A10	A11	A12	A13	A14	A15	C2	C1	C0
0	0	0	0	0	0	0	0	0	0	0	0	D0	D1	D2	D3	D4	D5	D6	D7	D8	D9	C2	C1	C0

Table 38 Initialization phase in 16-bit mode

Start bits		Error status	15-bit sensor data (lsb first)														CRC		
S1	S2	E0	A0	A1	A2	A3	A4	A5	A6	A7	A8	A9	A10	A11	A12	A13	A14	C2	C1	C0
0	0	0	0	0	0	0	0	D0	D1	D2	D3	D4	D5	D6	D7	D8	D9	C2	C1	C0

Initialization phase III

Downloaded from Arrow.com.

During the third initialization phase, the sensor transmits 'Sensor Ready', 'Sensor Defect' or other status data. If the sensor is defective, it will continue to send the 'Sensor Defect' messages and other optional status data until it is powered off.

'Sensor Ready' Code 0x1E7 at A15 to A6 - if the sensor is OK

'Sensor Defect' Code 0x1F4 at A15 to A6 - if there is an Diagnostic error

In High Resolution mode the AS5172 transmits the same PSI5 frame on both programmed time slots.

In overvoltage, undervoltage case and AGC High, Low the AS5172 is not reporting this errors in initialization phase III but it will send the error code in the run mode.

7.7.7.1 Initialization phase data format

ID blocks and data blocks are sent in an alternating sequence, 'k' times each. The block identifiers are used for a numbering of the following data nibbles. After any power-on or undervoltage reset, the internal logic starts up with an initialization program. The factor 'k' can vary between 1 and 4 and can be configured with 'Init_phase_repetition' in register 0x12.

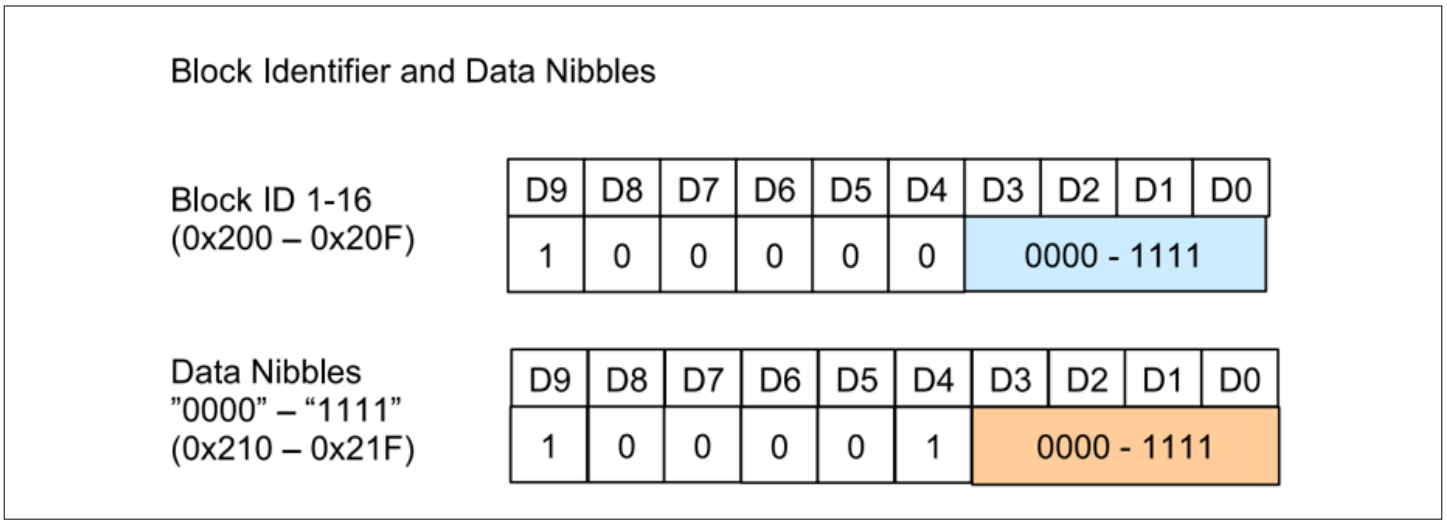

Figure 23 Block ID and data nibbles

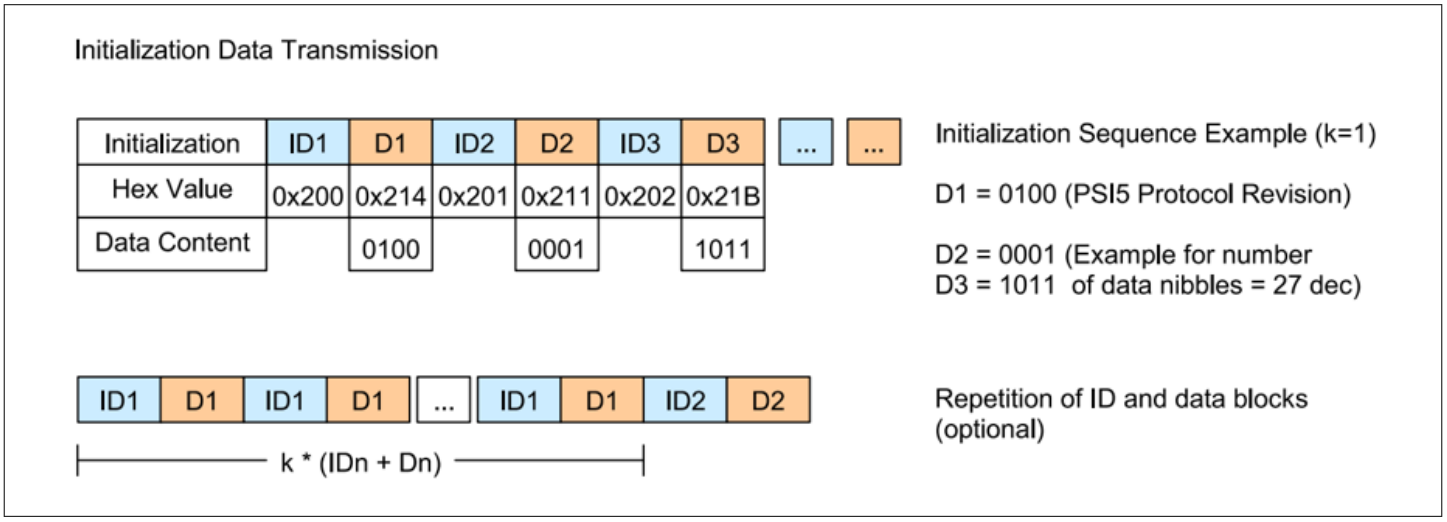

Figure 24 Startup sequence

Downloaded from Arrow.com.

7.7.7.2 Initialization data content

During the second initialization phase, the AS5172 transmits sensor and application specific information to the ECU. Those informations are described into Table 39.

Table 39 Initialization content

Field ID#	Nibble ID#	Name	Description	Register address	Value
F1	D1	Protocol revision	PSI5 V1.3	Hard-coded	0100
			PSI5 V2.1	Hard-coded	0110
F2	D2, D3	Number of data blocks	Number of data blocks = 22	Hard-coded	0001 0000
			Number of data blocks = 32	Hard-coded	0010 0110
F3	D4, D5	Manufacturer code	Vendor ID	0x1E	Customer
F4	D6, D7	Sensor type	Sensor type	0x0E	Customer
F5	D8, D9	Sensor parameter	Sensor parameter	0x0E, 0x0F	Customer
F6	D10, D11	Sensor code (sensor)	Sensor code (sensor)	0x0F, 0x10	Customer
F7	D12	Sensor code (vehicle)	Sensor code (vehicle)	0x10	Customer
F8	D13 - D16	Production date	Production date	0x0C, 0x0D	Customer
F9	D17 - D22	Lot and serial number	Infineon ID	0x02, 0x03, 0x04	Factory

7.7.7.3 Run mode

After finishing Initialization Phase III the AS5172 enters Run Mode. If the sensor is configured in asynchronous mode it will start transmitting data continuously according PSI5 standard. Using the synchronous mode, the transmission is triggered by a sync pulse of the ECU.

If the AS5172 is configured in asynchronous mode, it will transmit the data continuously according the PSI5 Specification.

In case of an application or sensor error, AS5172 is performing in run mode according the description in chapter Diagnostic.

7.7.8 Communication modes

7.7.8.1 Asynchronous mode (PSI5-A)

PSI5-A describes a point-to-point connection for unidirectional, asynchronous data transmission.

Each sensor is connected to the ECU by two wires. After switching on the power supply, the sensor starts transmitting data to the ECU periodically. Timing and repetition rate of the data transmission are controlled by the sensor.

Downloaded from Arrow.com.

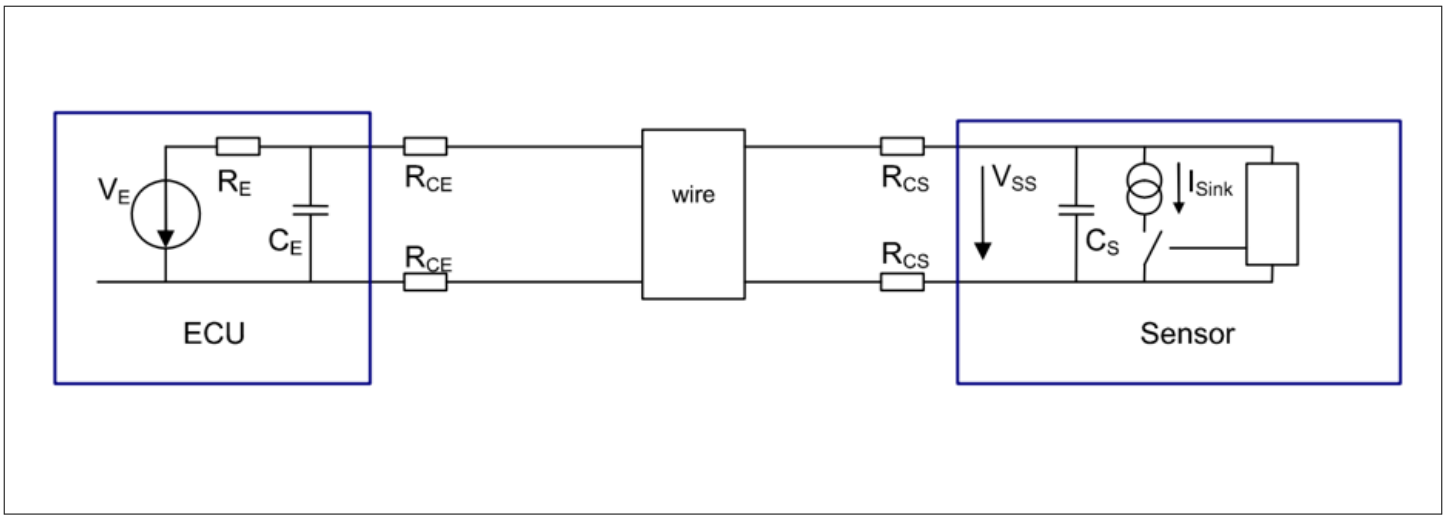

Figure 25 Asynchronous single sensor configuration

7.7.8.2 Synchronous parallel bus mode (PSI5-P)

PSI5-P describes a bus configuration for synchronous data transmission of one or more sensors. Each sensor is connected to the ECU by a separate pair of wires (star topology). Each data transmission period is initiated by a voltage synchronization signal from the ECU to the sensors. Having received the synchronization signal, each sensor starts transmitting its data with the corresponding time shift in the assigned time slot.

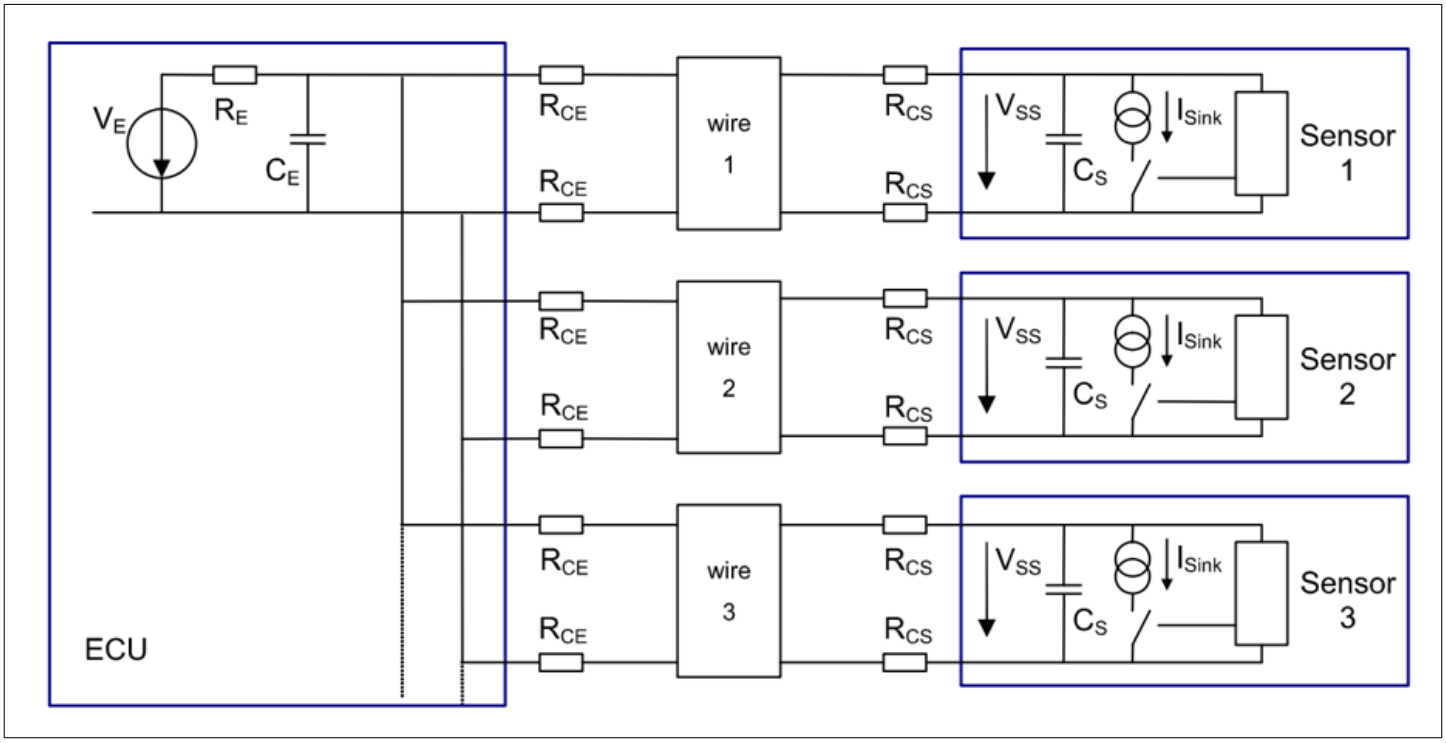

Figure 26 Synchronous parallel bus mode (PSI5-P)

7.7.8.3 Synchronous universal bus mode (PSI5-U)

PSI5-U describes a bus configuration for synchronous data transmission of one or more sensors. The sensors are connected to the ECU in different wiring topologies including splices or pass-through configurations. Each data transmission period is initiated by a voltage synchronization signal from the ECU to the sensors. Having received the

Downloaded from Arrow.com.

synchronization signal, each sensor starts transmitting its data with the corresponding time shift in the assigned time slot.

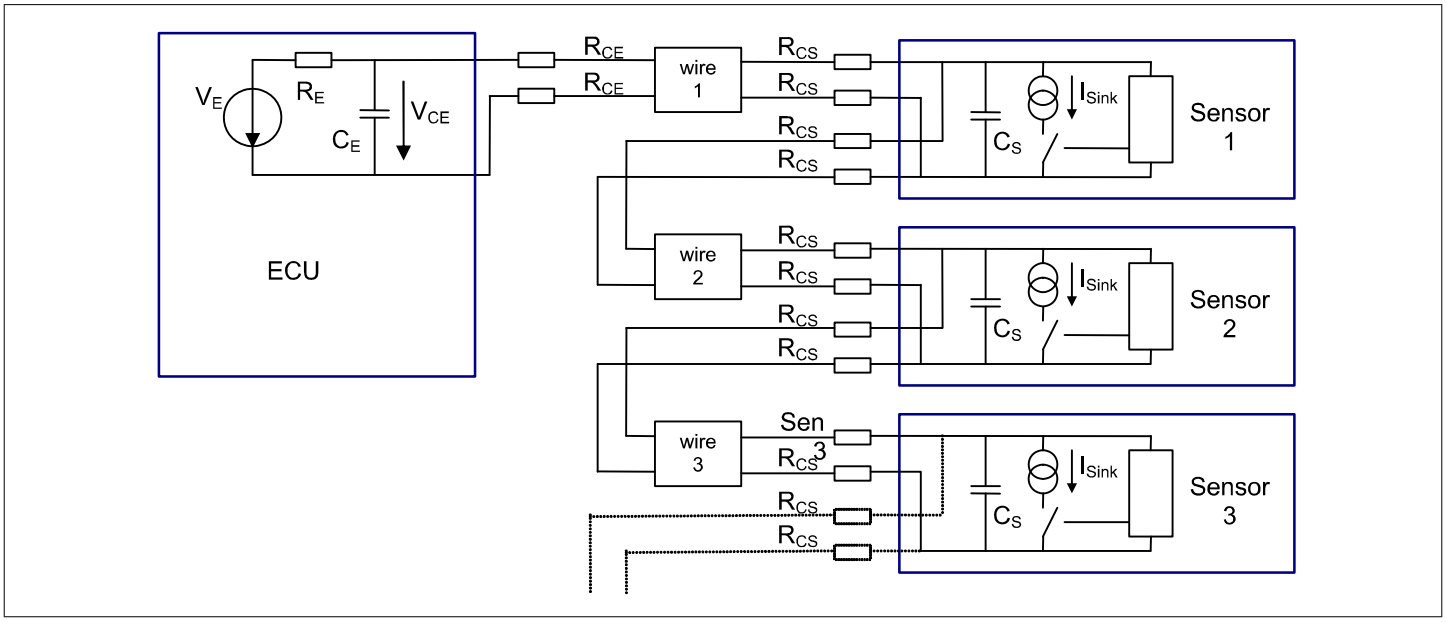

Figure 27 Synchronous parallel bus mode (PSI5-P)

7.7.9 Diagnostic

The AS5172 allows a high ASIL level in the application through a robust embedded selfdiagnostic (e.g. ASIL A).

In general, AS5172 sensor is developed as SEooC according the ISO26262. For more information refer to the AS5172 Safety Manual which is available on request to the application engineering team.

Table 40 Diagnostic table

SM	Failure mode	Recoverable	10-bit mode error info	16-bit mode error info	20-bit mode error info
SM1	Watchdog fail	-	Permanent low level	Permanent low level	Permanent low level
SM2	Offset compensation	X	0x1ED	0x1ED at A9 to A0 E0 = 1	0x1ED at A15 to A6 E0 = 1
SM3	CORDIC overflow	-	0x1F4	0x1F4 at A9 to A0 E0 = 1	0x1F4 at A15 to A6 E0 = 1 A0 = 1
SM4	Magnetic field out of range	X	0x1EB	0x1EB at A9 to A0 E0 = 1	0x1EB at A15 to A6 E0 = 1
SM5	VDD3V3 undervoltage	X	Permanent low level	Permanent low level	Permanent low level
SM6	Reverse polarity	X	Permanent low level	Permanent low level	Permanent low level
SM7	VDD overvoltage	X	0x1EA	0x1EA at A9 to A0 E0 = 1	0x1EA at A15 to A6 E0 = 1
SM8	VDD undervoltage under POR level	-	Permanent low level	Permanent low level	Permanent low level

(table continues...)

Downloaded from Arrow.com.

Table 40 (continued) Diagnostic table

SM	Failure mode	Recoverable	10-bit mode error info	16-bit mode error info	20-bit mode error info
SM9	VDD undervoltage	X	0x1EC	0x1EC at A9 to A0 E0 = 1	0x1EC at A15 to A6 E0 = 1
SM10	OTP checksum error	-	0x1F4	0x1F4 at A9 to A0 E0 = 1	0x1F4 at A15 to A6 E0 = 1 A2 = 1
SM11[1)]	Broken Hall element	-	0x1F4	0x1F4 at A9 to A0 E0 = 1	0x1F4 at A15 to A6 E0 = 1 A3 = 1

1) Disabled in version AS5172B. May effect ASIL level in application.

***Note**: Recoverable: Sensor is working if the error condition is solved.*

7.7.9.1 Diagnostic procedure in PSI5

If a OTP checksum error (SM10) occurs after the first OTP download the PSI5 interface shows a 'Sensor Defect' Code - 0x1F4 in initialization phase III. This error code will be sent until the device is powered off.

If any other diagnostic error condition occurs during initialization phase I or II the error will be masked. It will then be reported in initialization phase III by transmitting 'Sensor Defect' Code 0x1F4.

When a diagnostic error condition appears during PSI5 run mode the specific error code will be transmitted on the PSI5 interface.

During run mode:

When a diagnostic error condition appears during the PSI5 run mode the error code 'Sensor Defect' (0x1F4) has to be transmitted on the PSI5 interface until the AS5172 is reset by the ECU.

The internal diagnostic error conditions are:

- CORDIC Overflow
- OTP Check fail
- Broken Hall element
- Broken channel
- Watchdog

When an watchdog error is present the PSI5_out signal from the digital part is forced to '0'. Therefore the PSI5 interface shows a permanent low level current as long as the watchdog error is present.

When an VDD3 undervoltage is present the PSI5_out signal from the digital part is forced to '0'. Therefore the PSI5 interface shows a permanent low level current as long as the VDD3 undervoltage is present.

In magnet field strength out of spec, the AS5172 is transmitting the error code 0x1EB during the PSI5 run mode and keeps transmitting this error code until the flag goes to low or the AS5172 is powered off by ECU.

In overvoltage, the AS5172 is transmitting the error code 0x1EA during the PSI5 run mode and keeps transmitting this error code until the flag from the analog part goes to low or AS5172 is powered off by ECU.

In undervoltage (between threshold and min VDD), the AS5172 is transmitting the error code 0x1EC during the PSI5 run mode and keeps transmitting this error code until the flag from the analog part goes to low or AS5172 is powered off by ECU.

Downloaded from Arrow.com.

When an undervoltage below the POR threshold is present the PSI5_out signal from the digital part is forced to '0'. Therefore the PSI5 interface shows a permanent low level current as long as the undervoltage is present.

When using the 20-bit or 16-bit mode the status message 'Sensor Defect' (code 0x1F4) is transmitted at the bits A15 to A6 and also the bit E0 is set to '1' when there is a diagnostic error condition. The frame control bits (F2 to F0) keep the functionality of the frame counter. On the bits A5 to A0 a detailed failure code is transmitted with the following bit assignment.

Downloaded from Arrow.com.

8 Application information

8.1 Signature calculation

The OTP of AS5172 uses a BIST technique with Multiple Input Signature Register circuits. To activate this BIST a calculation of the Signature Byte is necessary which has to be stored in the OTP during programming. For calculating the signature byte the content of the whole memory (0x01 to 0x1F) has to be read out. Out of this information the following calculation has to be done.

```
Byte: 0x01 = data1
Byte: 0x02 = data2
…
Byte: 0x1F = data31
unsigned int misr, misr_shift, misr_xor, misr_msb;
            misr = 0;
            for (int i = 0; i<30; i++) {
                     misr_shift = (misr << 1);
                     misr_xor = (misr_shift ^ content[i]) % 256;
                     misr_msb = misr / (128);
                     if (misr_msb == 0)
                          misr = misr_xor;
                     else
                          misr = (misr_xor ^ 29) % 256;
}
content= { data1,data2,data3,data4,data5,data6,
data7,data8,data9,data10,data11, data12,data13,data14,data15,data16,
data17,data18,data19,data20,data21,data22,
data23,data24,data25,data26,data27,data28,
data29,data30,data31};
```

8.2 Programming procedure

For further information about the programming please refer to application note AN_AS5172_Programming_Procedure_V1-00. Please get in contact with the application engineering team.

Downloaded from Arrow.com.

8.3 Recommended application diagrams and built-in capacitors

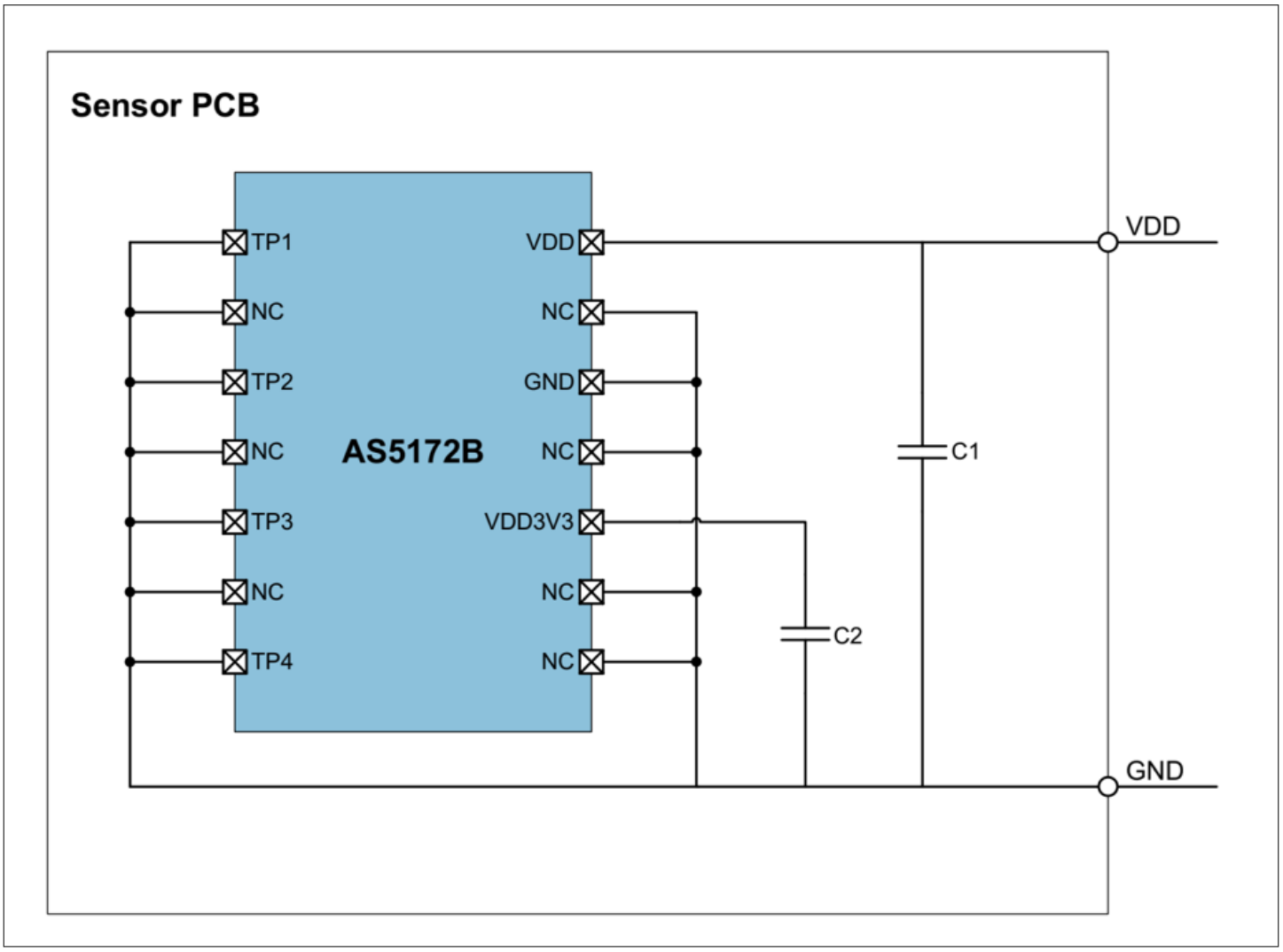

Figure 28 Application schematic for AS5172B

Table 41 AS5172 component specification (AS5172B)

Symbol	AS5172B components	Min.	Typ.	Max.	Unit	Notes
C1	VDD buffer capacitor	13.5	15	16.5	nF	
C2	VDD3V3 regulator capacitor		470		nF	
C2_ESR	VDD3V3 regulator capacitor ESR			300	MΩ	

Downloaded from Arrow.com.

9 Package drawings & markings

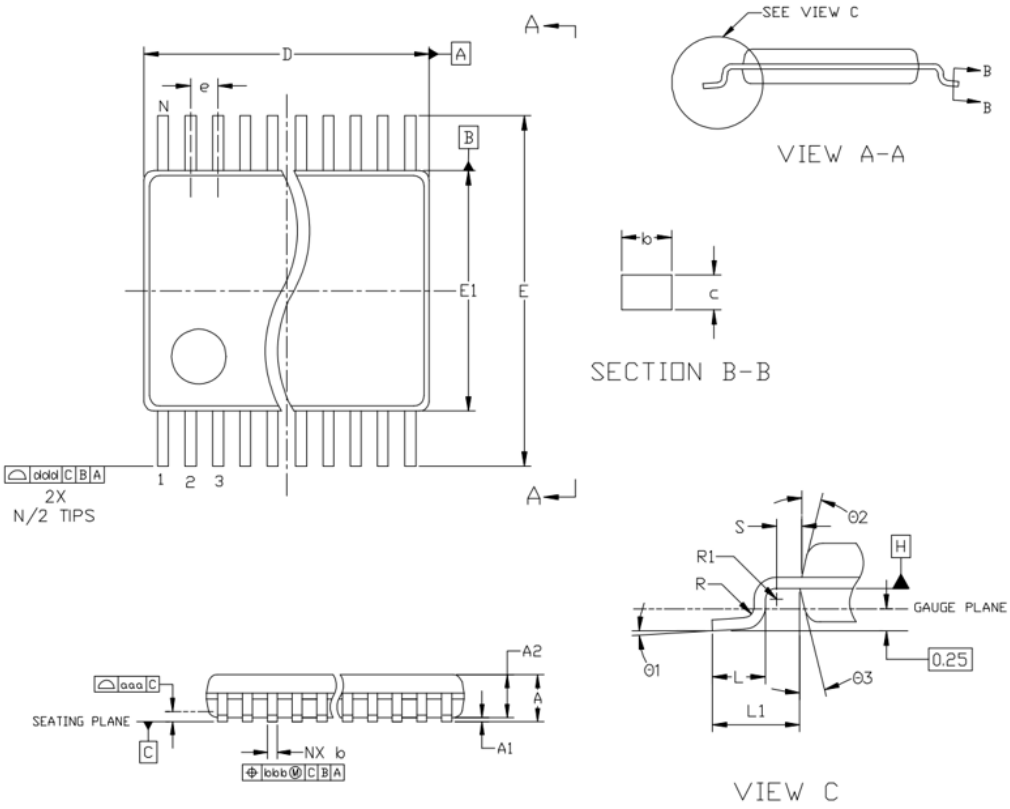

Symbol	Min	Nom	Max
A	-	-	1.20
A1	0.05	-	0.15
A2	0.80	1.00	1.05
b	0.19	-	0.30
c	0.09	-	0.20
D	4.90	5.00	5.10
E	-	6.40 BSC	-
E1	4.30	4.40	4.50
e	-	0.65 BSC	-
L	0.45	0.60	0.75
L1	-	1.00 REF	-

Symbol	Min	Nom	Max
R	0.09	-	-
R1	0.09	-	-
S	0.20	-	-
θ1	0°	-	8°
θ2	-	12 REF	-
θ3	-	12 REF	-
aaa	-	0.10	-
bbb	-	0.10	-
ccc	-	0.05	-
ddd	-	0.20	-
N		14	

Figure 29 TSSOP14 package outline drawing

1. Dimensioning and tolerancing conform to ASME Y14.5M - 1994.
2. All dimensions are in millimeters. Angles are in degrees.
3. N is the total number of terminals.

Downloaded from Arrow.com.



Figure 30 TSSOP14 marking drawings

Table 42 TSSOP14 packaging code

XXXXX
Tracecode

9.1 Mechanical data

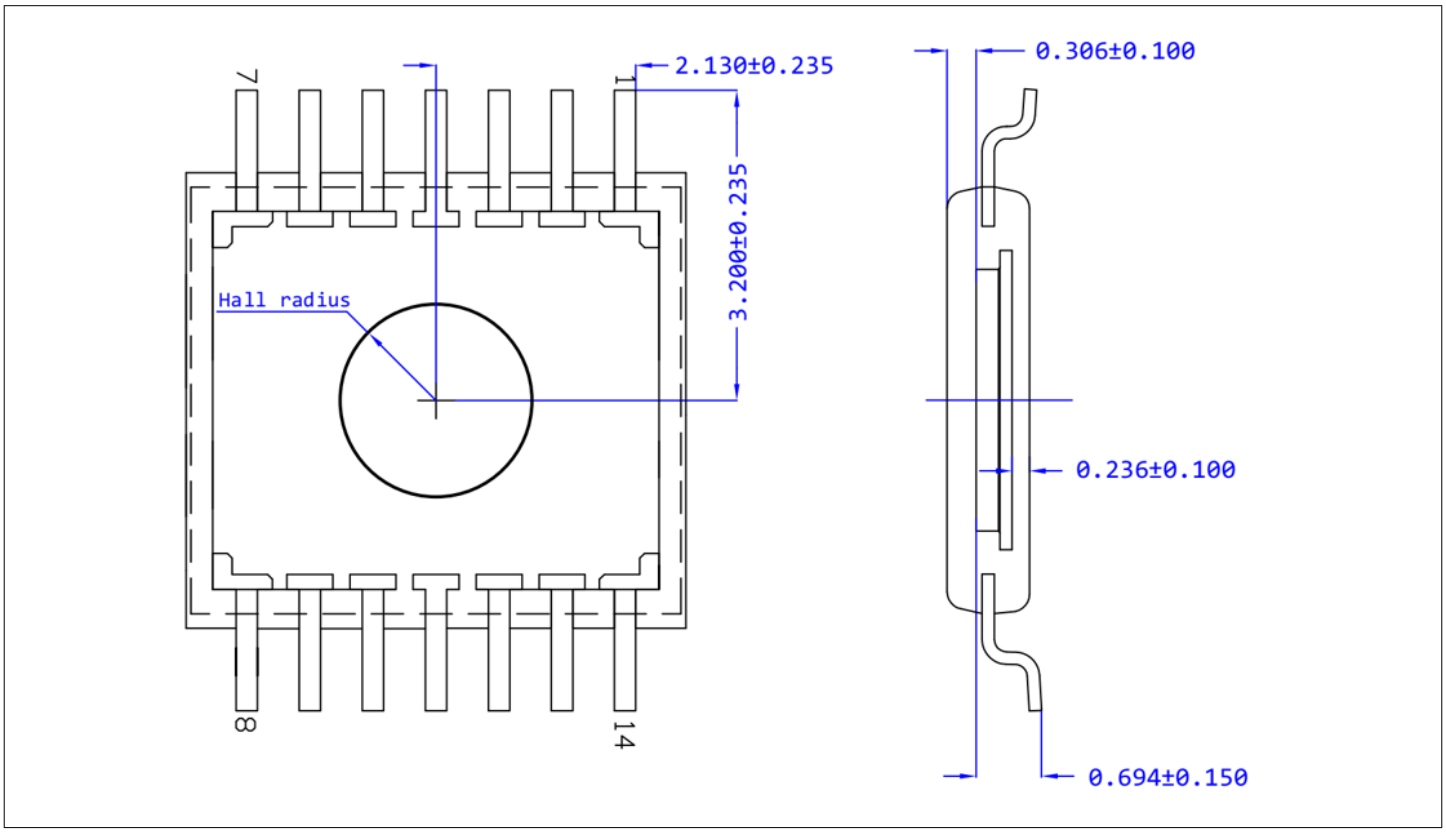

Figure 31 TSSOP14 die placement and hall array position

1. Dimensions are in mm
2. The Hall array center is located in the center of the IC package. Hall array radius is 1.25mm.
3. Die thickness is 203µm nominal.

Downloaded from Arrow.com.

Revision history

Document revision	Date	Description of changes
1.00	2026-09-09	Document rebranded from ams-OSRAM to Infineon; technical specifications remain unchanged. **Legacy ams changes from previous released version to revision V2-01** • Removed all instances of AS5172A from the document • Document contents transferred to latest ams OSRAM template

Downloaded from Arrow.com.

Trademarks

All referenced product or service names and trademarks are the property of their respective owners.

Edition 2026-09-09

Published by

Infineon Technologies AG

81726 Munich, Germany

© 2026 Infineon Technologies AG

All Rights Reserved.

Do you have a question about any aspect of this document?

Email: erratum@infineon.com

Document reference
IFX-ddg1786350083742

Important notice

Products which may also include samples and may be comprised of hardware or software or both ("Product(s)") are sold or provided and delivered by Infineon Technologies AG and its affiliates ("Infineon") subject to the terms and conditions of the frame supply contract or other written agreement(s) executed by a customer and Infineon or, in the absence of the foregoing, the applicable Sales Conditions of Infineon. General terms and conditions of a customer or deviations from applicable Sales Conditions of Infineon shall only be binding for Infineon if and to the extent Infineon has given its express written consent.

For the avoidance of doubt, Infineon disclaims all warranties of non-infringement of third-party rights and implied warranties such as warranties of fitness for a specific use/purpose or merchantability. Infineon shall not be responsible for any information with respect to samples, the application or customer's specific use of any Product or for any examples or typical values given in this document.

If this document is marked as 'Preliminary', 'Target', 'Draft' or 'Proposal', Infineon reserves the right to change all information given in this document at any time without notice. Subject to the development and release of a Product for series supply by Infineon, the technical specifications of the Product are set forth in the relevant datasheet provided by Infineon without such marking.

The data contained in this document is exclusively intended for technically qualified and skilled customer representatives. It is the responsibility of the customer to evaluate the suitability of the Product for the intended application and the customer's specific use and to verify all relevant technical data contained in this document in the intended application and the customer's specific use. The customer is responsible for properly designing, programming, and testing the functionality and safety of the intended application, as well as complying with any legal requirements related to its use.

Unless otherwise explicitly approved by Infineon, Products may not be used in any application where a failure of the Products or any consequences of the use thereof can reasonably be expected to result in personal injury.

However, the foregoing shall not prevent the customer from using any Product in such fields of use that Infineon has explicitly designed and sold it for, provided that the overall responsibility for the application lies with the customer. Infineon expressly reserves the right to use its content for commercial text and data mining (TDM) according to applicable laws, e.g. Section 44b of the German Copyright Act (UrhG). If the Product includes security features:

Because no computing device can be absolutely secure, and despite security measures implemented in the Product, Infineon does not guarantee that the Product will be free from intrusion, data theft or loss, or other breaches ("Security Breaches"), and Infineon shall have no liability arising out of any Security Breaches.

If this document includes or references software:

The software is owned by Infineon under the intellectual property laws and treaties of the United States, Germany, and other countries worldwide. All rights reserved. Therefore, you may use the software only as provided in the software license agreement accompanying the software.

If no software license agreement applies, Infineon hereby grants you a personal, non-exclusive, non-transferable license (without the right to sublicense) under its intellectual property rights in the software (a) for software provided in source code form, to modify and reproduce the software solely for use with Infineon hardware products, only internally within your organization, and (b) to distribute the software in binary code form externally to end users, solely for use on Infineon hardware products. Any other use, reproduction, modification, translation, or compilation of the software is prohibited.

For further information on the Product, technology, delivery terms and conditions, and prices, please contact your nearest Infineon office or visit www.infineon.com.

Downloaded from Arrow.com.