THIS DRAWING IS UNPUBLISHED. RELEASED FOR PUBLICATION 20
© COPYRIGHT 20 BY - ALL RIGHTS RESERVED.

REVISIONS					
P	LTR	DESCRIPTION	DATE	DWN	APVD
	B	INITIAL	19SEP2017	YC	CW
	B1	ECR-18-013580	30AUG2018	WQR	CW
	B2	ECR-19-000492	23JAN2019	AL	CW
	B2	ECR-19-004179	24APR2019	AL	CW

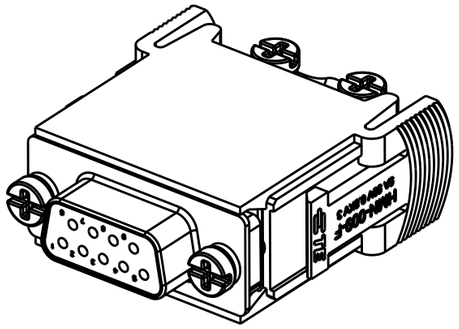

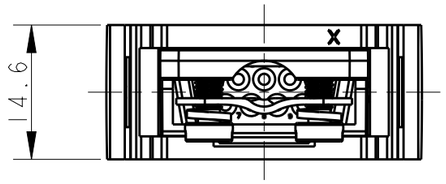

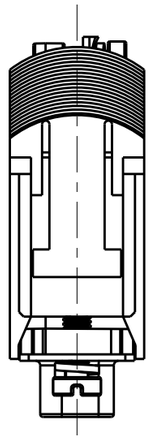

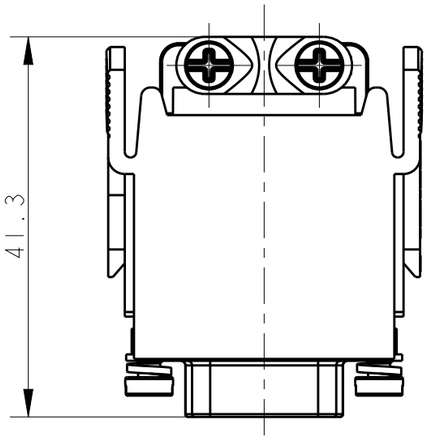

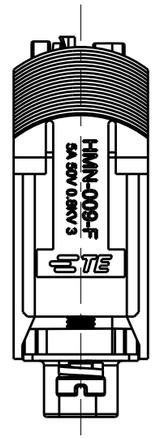

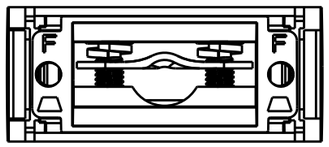

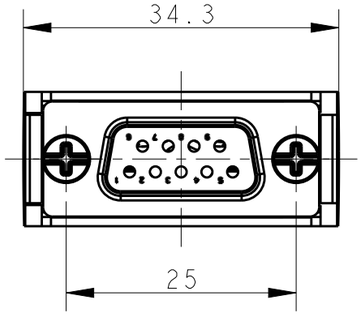

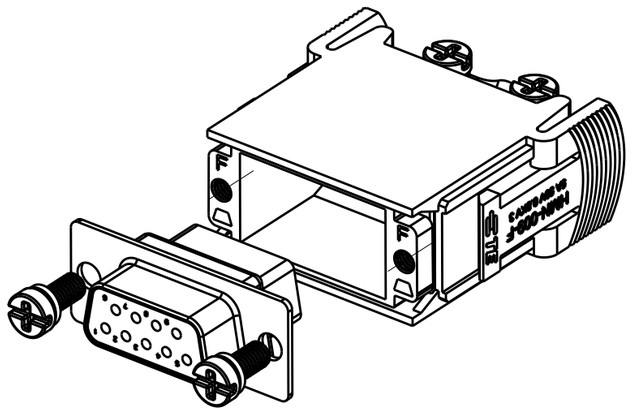

NOTES:
1. TECHNICAL CHARACTERISTICS:
   INSULATION MATERIAL: PC
   RATED VOLTAGE: 50V
   RATED CURRENT: 5A
   INSULATION RESISTANCE: >=400MΩ
   RATED IMPULSE VOLTAGE: 0.8KV
   POLLUTION DEGREE: 3
   FLAMMABILITY: UL94V-0
   MATING CYCLES: 500 CYCLES
   WIRE RANGE: 0.08~0.52 mm² (28~20 AWG)
   CONTACT TYPE: CRIMP CONTACT
2. CONTACT NEED TO BE ORDERED SEPARATELY.
   (ORDER No. REFER TO DRAWING:T20700X20XX000)

注释：
1. 技术参数：
   绝缘材料： PC
   额定电压： 50V
   额定电流： 5A
   绝缘电阻： >=400MΩ
   额定脉冲电压： 0.8KV
   污染等级： 3
   阻燃等级： UL94V-0
   插拔次数： 500次
   接线范围： 0.08~0.52 mm² (28~20 AWG)
   接线类型： 冷压接
2. 端子需要单独订购.
   (订货号参考图面： T20700X20XX000)

T2111092201-007	HMN-009-F	HMN-009 FEMALE MODULE INSERT HMN-009 模块母插
PART NUMBER 料 号		PART DESCRIPTION 描 述

THIS DRAWING IS A CONTROLLED DOCUMENT.

DIMENSIONS: mm	TOLERANCES UNLESS OTHERWISE SPECIFIED:
	0 PLC ±- 1 PLC ±- 2 PLC ±- 3 PLC ±- 4 PLC ±- ANGLES ±-
MATERIAL - -	FINISH - -

DWN	YORK CHEN 19SEP2017
CHK	GINO YAO 19SEP2017
APVD	CHRIS WANG 19SEP2017
PRODUCT SPEC	108-137064
APPLICATION SPEC	114-137064
WEIGHT	-

TE Connectivity

NAME HMN-009-F

SIZE	CAGE CODE	DRAWING NO	RESTRICTED TO
A3	00779	C-T2111092201007	-

CUSTOMER DRAWING | SCALE 3:2 | SHEET 1 OF 1 | REV C

1470-19 (3/13)

Downloaded from Arrow.com.