Data Sheet | Item Number: 750-882

Controller ETHERNET; 3rd Generation; Media Redundancy

https://www.wago.com/750-882

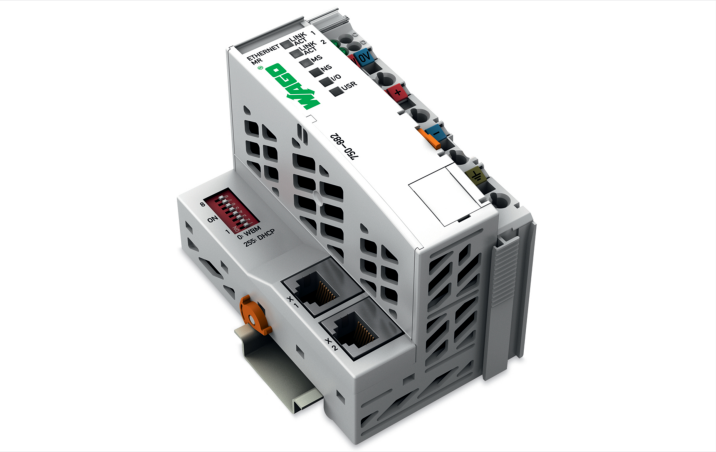

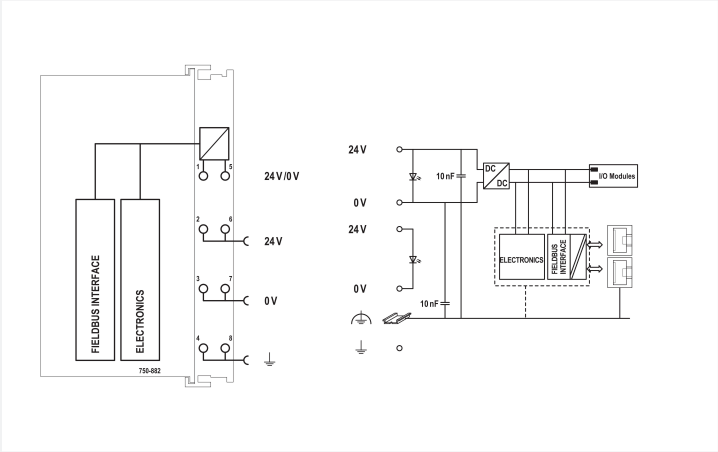

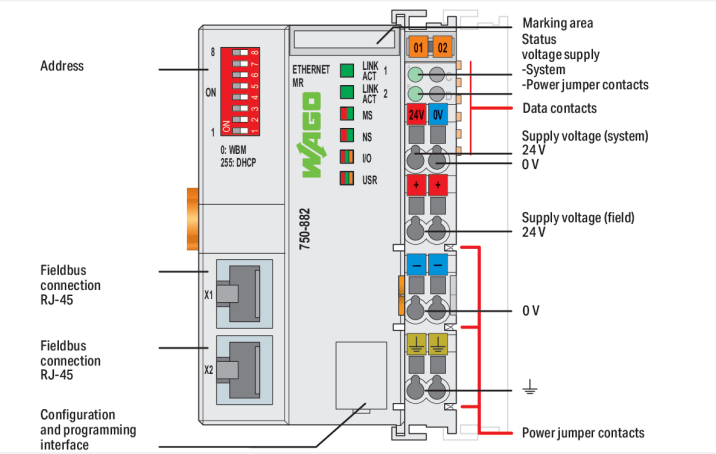

In conjunction with the WAGO I/O System, the ETHERNET Controller serves ETHERNET networks requiring fast and safe media redundancy. The controller supports all digital and analog input/output modules, as well specialty modules found within the 750/753 Series, and is suitable for data rates of 10/100 Mbit/s.

Media redundancy is achieved by operating the controller in two separate networks – which is accessible via two different IP addresses (including two MAC IDs). Cross communication between separate channels is not possible. The two separate ETHERNET interfaces allow redundant connection of two transmission paths (no hub or switch required). Both interfaces support autonegotiation and Auto-MDI(X). The DIP switch configures the last byte of both default IP addresses and may be used for IP address assignment (DHCP, BootP).
The media redundancy controller is designed for fieldbus communication via MODBUS in ETHERNET networks. It also supports a wide variety of standard ETHERNET protocols (HTTP, BootP, DHCP, DNS, FTP). An integrated Webserver provides user configuration options, while displaying the controller's status information.
The IEC 61131-3 programmable controller is multitasking-capable and features a capacitor-backed RTC.

Notes

Note	For new installations, take the alternative items into account.

Downloaded from Arrow.com.

Technical data

Communications	EtherNet/IP™ Modbus (TCP, UDP) ETHERNET
ETHERNET protocols	HTTP BootP DHCP DNS SNTP FTP SNMP
Redundancy function	via two logically separated ETHERNET interfaces
Visualization	Web-Visu
CPU	32 bits
Programming languages per IEC 61131-3	Instruction List (IL) Ladder Diagram (LD) Function Block Diagram (FBD) Continuous Function Chart (CFC) Structured Text (ST) Sequential Function Chart (SFC)
Programming environment	WAGO-I/O-*PRO* V2.3 (based on CODESYS V2.3)
Configuration options	WAGO-I/O-*CHECK* Web-Based Management
Transmission rate	10/100 Mbit/s
Transmission medium (communication/fieldbus)	Twisted pair S-UTP; 100 Ω; Cat. 5; 100 m maximum cable length
Transmission performance	Class D per EN 50173
Program memory	1024 KB
Data memory	512 KB
Non-volatile software memory	32 KB
Number of modules per node (max.)	250
Number of modules without a bus extension (max.)	64
Input and output process image (fieldbus) max.	1020 words/1020 words
Powerfail RTC buffer	6 days (min.)
Indicators	LED (LINK/ACT) green: Network connection via ports 1 ... 2; LED (MS, NS) red/green: Status of node, network; LED (I/O, USR) red/green/orange: Local data bus status, status programmable by user; LED (A, B) green: System power supply status, field supply
Supply voltage (system)	24 VDC, SELV/PELV (-25 ... +30 %); via wiring interface (CAGE CLAMP® connection); External fuse required: 2 A slow-blow
Input current (typ.) at nominal load (24 V)	500 mA
Power supply efficiency (typ.) at nominal load (24 V)	90 %
Current consumption (system supply)	450 mA
Total current (system supply)	1700 mA
Supply voltage (field)	24 VDC, SELV/PELV (-25 ... +30 %); via power jumper contacts (supply via CAGE CLAMP® connection; distribution via spring contact); External fuse required: 10 A slow-blow
Current carrying capacity (power jumper contacts)	10 A
Number of outgoing power jumper contacts	3
Isolation	500 V system/field

Connection Data

Connection technology: communication/fieldbus	EtherNet/IP™: 2 x RJ-45; Modbus (TCP, UDP): 2 x RJ-45
Connection technology: system supply	2 x CAGE CLAMP®
Connection technology: field supply	6 x CAGE CLAMP®
Connectable conductor materials	Copper
Connection type	System/field supply
Solid conductor	0.08 ... 2.5 mm² / 28 ... 14 AWG
Fine-stranded conductor	0.08 ... 2.5 mm² / 28 ... 14 AWG
Strip length	8 ... 9 mm / 0.31 ... 0.35 inches
Connection technology: device configuration	1 x Male connector; 4-pole

Downloaded from Arrow.com.

Physical data

Width	61.5 mm / 2.421 inches
Height	100 mm / 3.937 inches
Depth	71.9 mm / 2.831 inches
Depth from upper-edge of DIN-rail	64.7 mm / 2.547 inches

Mechanical data

Mounting type	DIN-35 rail

Material data

Housing material	Polycarbonate; polyamide 6.6
Fire load	3.45 MJ
Weight	159.2 g
Conformity marking	CE

Environmental requirements

Ambient temperature (operation)	0 … +55 °C
Ambient temperature (storage)	-25 … +85 °C
Protection type	IP20
Pollution degree	2 per IEC 61131-2
Operating altitude	without temperature derating: 0 … 2000 m; with temperature derating: 2000 … 5000 m (0.5 K/100 m); 5000 m (max.)
Mounting position	Horizontal left, horizontal right, horizontal top, horizontal bottom, vertical top and vertical bottom
Relative humidity (without condensation)	95 %
Vibration resistance	4g per IEC 60068-2-6
Shock resistance	15g per IEC 60068-2-27
EMC immunity to interference	per EN 61000-6-2, marine applications
EMC emission of interference	per EN 61000-6-3, marine applications
Exposure to pollutants	per IEC 60068-2-42 and IEC 60068-2-43
Permissible H_2S contaminant concentration at a relative humidity 75 %	10 ppm
Permissible SO_2 contaminant concentration at a relative humidity 75 %	25 ppm

Commercial data

Product Group	15 (I/O System)
PU (SPU)	1 pcs
Packaging type	Box
Country of origin	DE
GTIN	4050821174929
Customs tariff number	85371091990

Product Classification

UNSPSC	43222605
eCl@ss 10.0	27-24-26-07
eCl@ss 9.0	27-24-26-07
ETIM 9.0	EC000236
ETIM 10.0	EC000236
ECCN	NO US CLASSIFICATION

Downloaded from Arrow.com.

Environmental Product Compliance

CAS-No.	12060-00-3 1303-86-2 1317-36-8 25550-51-0 693-98-1 7439-92-1 79-94-7
REACH Candidate List Substance	2,2',6,6'-tetrabromo-4,4'-isopropylidenediphenol 2-methylimidazole 4-Methyl-1,2-cyclohexanedicarboxylic anhydride Diboron trioxide Lead Lead monoxide Lead titanium oxide (PbTiO3)
RoHS Compliance Status	Compliant,With Exemption
RoHS Exemption	6(c) 7(a) 7(c)-I 7(c)-II
SCIP notification number (Bulgaria)	0732f067-50da-4853-9af8-cc9e60fe6733
SCIP notification number (Czech Republic)	26e1f3f7-845b-4454-89c4-3c5fc8856765

Approvals / Certificates

General approvals

Approval	Standard	Certificate Name
EAC GZO Almaty Standart	TP TC 020/2011	EAC CoC 03083
KC National Radio Research Agency	Article 58-2, Clause 3	MSIP-REM-W43-PFC750
UL Underwriters Laboratories Inc. (ORDINARY LOCATIONS)	UL 508	E175199

Declarations of conformity and manufacturer's declarations

Approval	Standard	Certificate Name
EU-Declaration of Conformity WAGO GmbH & Co. KG	-	-

Approvals for marine applications

Approval	Standard	Certificate Name
ABS American Bureau of Shipping	-	25-0415412
BSH Bundesamt fuer Seeschiffahrt und Hydrographie	-	1104
BV Bureau Veritas S.A.	-	30389/C0 BV
DNV DNV GL SE	DNV-CG-0339,Aug.2021	TAA0000194
KR Korean Register of Shipping	-	KR HMB05880-AC001
LR Lloyds Register EMEA	-	LR22180952TA
NK Nippon Kaiji Kyokai	Guidel. Perform. Type Approvals	TA25276M

Approvals for marine applications

PRS Polski Rejestr Statków	-	TE/1101/880590/23
RINA RINA Germany GmbH	-	ELE343521XG001

Downloaded from Arrow.com.

Approvals for hazardous areas

Approval	Standard	Certificate Name
ATEX TUEV Nord Cert GmbH	EN 60079-0	TUEV14ATEX148929X (II 3 G Ex ec IIC T4 Gc)
CCCEx CQST/CNEx	CNCA-C23-01	2020312310000213 (Ex ec IIC T4 Gc)
IECEx TUEV Nord Cert GmbH	IEC 60079-0	IECEx TUN 14.0035 X (Ex ec IIC T4 Gc)
INMETRO TÜV Rheinland do Brasil Ltda.	IEC 60079-0	TÜV 12.1297 X
KTL Korea Testing Laboratory	KOSHA Article 34, IEC60079-0	21-KA4BO-0552X
UKEx WAGO GmbH & Co. KG	EN 60079-0	UKCA_WA GO22UKEX003X_ec
UL Underwriters Laboratories Inc. (HAZARDOUS LOCATIONS)	UL 121201	E198726

Downloads

Environmental Product Compliance

Compliance Search

Environmental Product Compliance 750-882

Documentation

Manual

Product Manual ETHERNET media redundancy programmable fieldbus controller	V 1.5.0	pdf 13065.97 KB	
System Manual Series 750/753			
Product Manual WAGOupload	2728688139 | 6 | en-US | 2025-10-15 11:04 23.10.2025	pdf 7342.56 KB	
Product Manual WAGO MODBUS Master Configurator	V 1.1.0	pdf 1761.59 KB	

Quick-Start Guide

Programmable Fieldbus Controller ETHERNET 750-88x	V 1.0.0	pdf 4292.44 KB	

Downloaded from Arrow.com.

System Description			
Overview on WAGO-I/O-SYSTEM 750 approvals		pdf 770.48 KB	
750 Controller, General Product Information		pdf 507.50 KB	

Bid Text			
750-882	19.02.2019	xml 6.97 KB	
750-882	19.05.2015	doc 30.50 KB	

Instruction Leaflet			
CCC Ex (Additional information)	26.04.2023	pdf 159.76 KB	

Application Notes

Application Note CoDeSys 2.3			
HART Tool Routing via ETHERNET with 750-820x/750-88x and CODESYS 2.3 (a116120)	1.0.0 22.03.2019	pdf 3798.36 KB	
Redundant Modbus communication with 750-882 (a300004)	1.0.0 11.11.2010	zip 743.00 KB	
Using the web visualization with Java™ runtime environment (JRE, JVM) 7 update 51 (7u51) (a500690)	1.2.4 26.02.2019	zip 4896.43 KB	
Application Note Power-Measurement_03 Library	19.01.2011 19.03.2012	zip 932.08 KB	
Application Note: DMX_02	26.04.2017 26.04.2017	zip 733.43 KB	
HVAC System Macros	10.03.2017 15.03.2019	zip 13252.92 KB	
Application Note: Mp-Bus_03 Library	2020-08-14 14.08.2020	zip 513.66 KB	
Connection of a Thermokon Thanos SR L MODBUS room control unit to the WAGO-I/O-SYSTEM	02.05.2013 13.05.2013	zip 305.89 KB	
Anbindung der HKW-Elektronik Wetterprognose-Station WS-K xx T ModBus	1.1 07.07.2017	zip 762.78 KB	
Application Note Scheduler_03.lib	20.05.2011 20.05.2011	zip 1717.92 KB	
GRUNDFOS GENIbus interface, application note	20.03.2017 20.03.2017	zip 279.86 KB	
Connection of Thermokon Multi-function room control units WRF 08	10.04.2019 10.04.2019	zip 855.84 KB	
Connection of DMX devices to the WAGO-I/O-SYSTEM via the ArtNet-DMX STAGE-PROFI 1.1	11.01.2013 11.01.2013	zip 1450.63 KB	
Connection of Thermokon Multi-function room control units WRF 06	10.04.2019 08.04.2016	zip 826.10 KB	
Application Note for the 750-494 3-Phase Power Measurement Module	24.01.2014 11.11.2014	zip 1629.99 KB	
Application Note: EnOcean_06 Library	30.11.2016 30.11.2016	zip 822.25 KB	

Application Note CoDeSys 2.3			
Application Note for the 750-495 3-Phase Power Measurement Module	24.01.2014 24.01.2014	zip 1806.18 KB	
Application Note Weather Station Elsner P03 Modbus	01.12.2011 28.10.2011	zip 269.09 KB	
Application note: DALI 753-647 Configuration Interface	V1.0.2 29.04.2019	zip 3032.71 KB	
HLK-Anlagenmakros für TRIC	2015-07-10 10.07.2015	zip 74963.43 KB	
Application Note Library ModuleAccess_01	05.01.2016 29.01.2016	zip 1001.22 KB	

 Continued on next page
Downloaded from Arrow.com.

CAD/CAE-Data

CAD data
2D/3D Models 750-882

CAE data
EPLAN Data Portal 750-882
WSCAD Universe 750-882
ZUKEN Portal 750-882

Engineering-Software

Configuration and Commissioning Software			
WAGO Ethernet Settings			
(759-316) WAGO Ethernet Settings / Serie 750	06.18.01.01 02.09.2021	zip 26678.54 KB	
WAGOupload	1.16.1.0 02.02.2022	zip 12111.45 KB	

Runtime Software

Firmware			
0750-0882, Controller ETHERNET	V 17 22.07.2022	zip 1483.18 KB	

Device Files

Device Driver			
WAGO USB Service Kabel Treiber / Serie 750 und 857	6.5.3.0 10.09.2014	zip 4721.96 KB	

Libraries

Device Description File			
MIB-Datei für Ethernet-Controller / Serie 750	2.0 03.04.2012	zip 5.99 KB	

Library			
WagoLibConfigETH_01	1.0.0	pdf 381.48 KB	
ModuleAccess_01.lib	1.8.7 27.01.2020	zip 2114.60 KB	

Downloaded from Arrow.com.

1 Compatible Products

1.1 Optional Accessories

1.1.1 Cables and connectors

1.1.1.1 Connector plug

Item No.: 750-979/000-011
Connector ETHERNET; RJ-45; Cat. 6A; angled; Code T568A; AWG 22; Strain relief

Item No.: 750-979/000-021
Connector ETHERNET; RJ-45; Cat. 6A; angled; Code T568A; AWG 24; Strain relief

Item No.: 750-979/000-012
Connector ETHERNET; RJ-45; Cat. 6A; angled; Code T568B; AWG 22; Strain relief

Item No.: 750-979/000-022
Connector ETHERNET; RJ-45; Cat. 6A; angled; Code T568B; AWG 24; Strain relief

Item No.: 750-977/000-011
Connector ETHERNET; RJ-45; Cat. 6A; straight; Code T568A; AWG 22

Item No.: 750-978/000-011
Connector ETHERNET; RJ-45; Cat. 6A; straight; Code T568A; AWG 22; Strain relief

Item No.: 750-977/000-021
Connector ETHERNET; RJ-45; Cat. 6A; straight; Code T568A; AWG 24

Item No.: 750-978/000-021
Connector ETHERNET; RJ-45; Cat. 6A; straight; Code T568A; AWG 24; Strain relief

Item No.: 750-977/000-012
Connector ETHERNET; RJ-45; Cat. 6A; straight; Code T568B; AWG 22

Item No.: 750-978/000-012
Connector ETHERNET; RJ-45; Cat. 6A; straight; Code T568B; AWG 22; Strain relief

Item No.: 750-977/000-022
Connector ETHERNET; RJ-45; Cat. 6A; straight; Code T568B; AWG 24

Item No.: 750-978/000-022
Connector ETHERNET; RJ-45; Cat. 6A; straight; Code T568B; AWG 24; Strain relief

Item No.: 750-975
ETHERNET RJ-45 connector, IP20; ETHERNET 10/100 Mbit/s; for field assembly

1.1.2 Communication

1.1.2.1 Communication cable

Item No.: 750-923
Configuration cable; USB connector; Length: 2.5 m

Item No.: 750-923/000-001
Configuration cable; USB connector; Length: 5 m

1.1.3 DIN-rail

1.1.3.1 Mounting accessories

Item No.: 210-196
Aluminum carrier rail; 35 x 8.2 mm; 1.6 mm thick; 2 m long; unslotted; similar to EN 60715; silver-colored

Item No.: 210-198
Copper carrier rail; 35 x 15 mm; 2.3 mm thick; 2 m long; unslotted; according to EN 60715; copper-colored

Item No.: 210-197
Steel carrier rail; 35 x 15 mm; 1.5 mm thick; 2 m long; slotted; similar to EN 60715; silver-colored

Item No.: 210-114
Steel carrier rail; 35 x 15 mm; 1.5 mm thick; 2 m long; unslotted; similar to EN 60715; silver-colored

Item No.: 210-118
Steel carrier rail; 35 x 15 mm; 2.3 mm thick; 2 m long; unslotted; according to EN 60715; silver-colored

Item No.: 210-115
Steel carrier rail; 35 x 7.5 mm; 1 mm thick; 2 m long; slotted; according to EN 60715; "Hole width 18 mm; silver-colored

Item No.: 210-112
Steel carrier rail; 35 x 7.5 mm; 1 mm thick; 2 m long; slotted; according to EN 60715; "Hole width 25 mm; silver-colored

Item No.: 210-113
Steel carrier rail; 35 x 7.5 mm; 1 mm thick; 2 m long; unslotted; according to EN 60715; silver-colored

Downloaded from Arrow.com.

1.1.4 Marking

1.1.4.1 Group marker carrier

Item No.: 750-106
Group marker carrier

1.1.4.2 Marker

Item No.: 750-100
Marker card; as a DIN A4 sheet; plain

Item No.: 2009-145/000-006
Mini-WSB Inline; for Smart Printer; 1700 pieces on roll; stretchable 5 - 5.2 mm; plain; snap-on type; blue

Item No.: 2009-145/000-007
Mini-WSB Inline; for Smart Printer; 1700 pieces on roll; stretchable 5 - 5.2 mm; plain; snap-on type; gray

Item No.: 2009-145/000-023
Mini-WSB Inline; for Smart Printer; 1700 pieces on roll; stretchable 5 - 5.2 mm; plain; snap-on type; green

Item No.: 2009-145/000-012
Mini-WSB Inline; for Smart Printer; 1700 pieces on roll; stretchable 5 - 5.2 mm; plain; snap-on type; orange

Item No.: 2009-145/000-005
Mini-WSB Inline; for Smart Printer; 1700 pieces on roll; stretchable 5 - 5.2 mm; plain; snap-on type; red

Item No.: 2009-145/000-024
Mini-WSB Inline; for Smart Printer; 1700 pieces on roll; stretchable 5 - 5.2 mm; plain; snap-on type; violet

Item No.: 2009-145
Mini-WSB Inline; for Smart Printer; 1700 pieces on roll; stretchable 5 - 5.2 mm; plain; snap-on type; white

Item No.: 2009-145/000-002
Mini-WSB Inline; for Smart Printer; 1700 pieces on roll; stretchable 5 - 5.2 mm; plain; snap-on type; yellow

Item No.: 248-501/000-006
Mini-WSB marking card; as card; not stretchable; plain; snap-on type; blue

Item No.: 248-501/000-007
Mini-WSB marking card; as card; not stretchable; plain; snap-on type; gray

Item No.: 248-501/000-023
Mini-WSB marking card; as card; not stretchable; plain; snap-on type; green

Item No.: 248-501/000-017
Mini-WSB marking card; as card; not stretchable; plain; snap-on type; light green

Item No.: 248-501/000-012
Mini-WSB marking card; as card; not stretchable; plain; snap-on type; orange

Item No.: 248-501/000-005
Mini-WSB marking card; as card; not stretchable; plain; snap-on type; red

Item No.: 248-501/000-024
Mini-WSB marking card; as card; not stretchable; plain; snap-on type; violet

Item No.: 248-501
Mini-WSB marking card; as card; not stretchable; plain; snap-on type; white

Item No.: 248-501/000-002
Mini-WSB marking card; as card; not stretchable; plain; snap-on type; yellow

1.1.4.3 Marker carrier

Item No.: 750-103
Group marker carrier

1.1.5 Shield termination

1.1.5.1 Shield clamping saddles

Item No.: 790-108
Shield clamping saddle; 11 mm wide; diameter of compatible conductor; 3 ... 8 mm

Item No.: 790-208
Shield clamping saddle; 12.4 mm wide; 3 ... 8 mm

Item No.: 790-116
Shield clamping saddle; 19 mm wide; diameter of compatible conductor; 7 ... 16 mm

Item No.: 790-216
Shield clamping saddle; 21.8 mm wide; 6 ... 16 mm

Item No.: 790-124
Shield clamping saddle; 27 mm wide; diameter of compatible conductor; 6 ... 24 mm

Item No.: 790-220
Shield clamping saddle; 30 mm wide; 6 ... 20 mm

Item No.: 790-140
Shield clamping saddle; diameter of compatible conductor

Downloaded from Arrow.com.

1.1.7 System enclosure

1.1.7.1 System enclosure

Item No.: 850-825
IP65 enclosure; Aluminium (RAL 7032); WxHxD (160x100x160 mm); 9 x M12, 4 x M20

Item No.: 850-826
IP65 enclosure; Aluminium (RAL 7032); WxHxD (240x100x160 mm); 4 x M20, 4 x M16, 14 x M12 cable grip

Item No.: 850-827
IP65 enclosure; Aluminium (RAL 7032); WxHxD (320x100x160 mm); 4 x M20, 8 x M16, 17 x M12 cable grip

Item No.: 850-828
IP65 enclosure; Aluminium (RAL 7032); WxHxD (480x100x160 mm); 4 x M20, 10 x M16, 35 x M12 cable grip

Item No.: 850-826/002-000
IP65 enclosure; Aluminium (RAL 7035); WxHxD (240x100x160 mm); 4 x M20, 4 x M16, 14 x M12 cable grip

Item No.: 850-827/002-000
IP65 enclosure; Aluminium (RAL 7035); WxHxD (320x100x160 mm); 4 x M20, 8 x M16, 17 x M12 cable grip

Item No.: 850-828/002-000
IP65 enclosure; Aluminium (RAL 7035); WxHxD (480x100x160 mm); 4 x M20, 10 x M16, 35 x M12 cable grip

Item No.: 850-834
IP65 enclosure; Polyester (RAL 7032); WxHxD (164x100x164 mm); 9 x M12, 4 x M20

Item No.: 850-835
IP65 enclosure; Polyester (RAL 7032); WxHxD (244x100x164 mm); 4 x M20, 4 x M16, 14 x M12 cable grip

Item No.: 850-836
IP65 enclosure; Polyester (RAL 7032); WxHxD (324x100x164 mm); 4 x M20, 8 x M16, 17 x M12 cable grip

Item No.: 850-814/002-000
IP65 enclosure; Sheet steel (RAL 7035); WxHxD (200x120x200 mm); without flange plate

Item No.: 850-815/002-000
IP65 enclosure; Sheet steel (RAL 7035); WxHxD (300x120x200 mm); without flange plate

Item No.: 850-816/002-000
IP65 enclosure; Sheet steel (RAL 7035); WxHxD (400x120x200 mm); without flange plate

Item No.: 850-817/002-000
IP65 enclosure; Sheet steel (RAL 7035); WxHxD (600x120x200 mm); without flange plate

Downloaded from Arrow.com.