THIS DRAWING IS UNPUBLISHED. RELEASED FOR PUBLICATION 2007
© COPYRIGHT 2007 BY - ALL RIGHTS RESERVED.

LOC	DIST
A1	-

REVISIONS

P	LTR	DESCRIPTION	DATE	DWN	APVD
	E	HOUSING MATERIAL CHANGE	07JUL2022	MP	JK

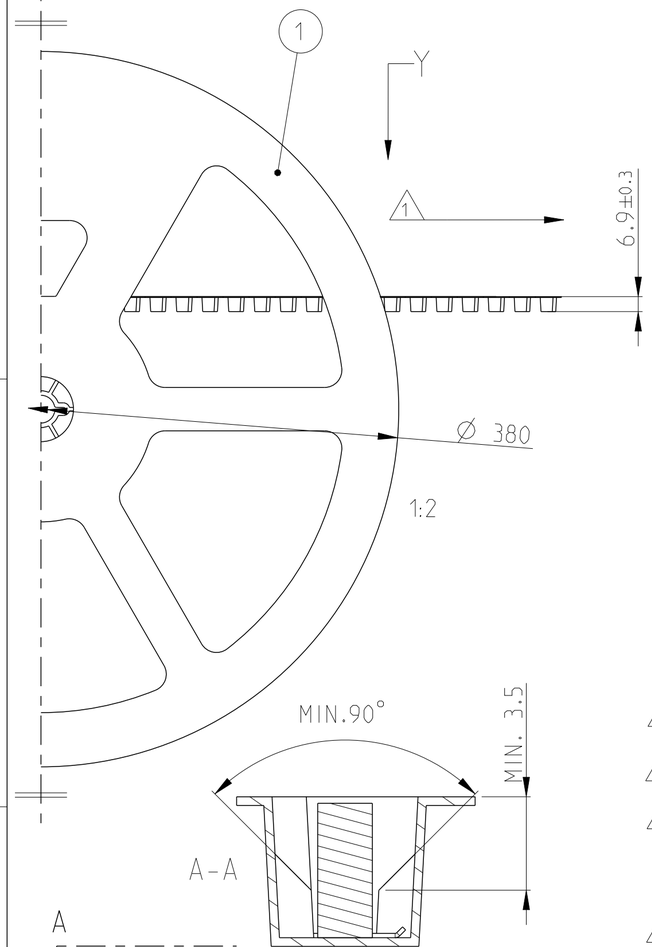

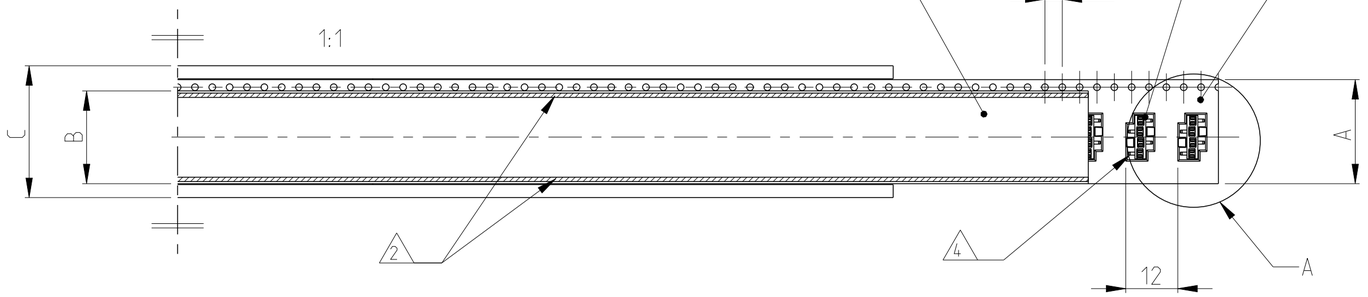

NOTES:

1. DIRECTION OF THE TOP OF THE REEL
2. COVER TAPE WITH BLISTER BELT WELDED
3. PACKING: 1100 CONNECTORS PER REEL
   13.8m BLISTER PER REEL
   13.8m COVER TAPE PER REEL
4. SOLDERLEGS 1. POS. OF EACH CONNECTOR AS SHOWN IN SHEET 2
5. PACKING ACCORDING TO DIN/IEC 286 RESPECTIVELY EIA 481 INCLUDING DECLARATIONS OF THE FIRST AND LAST RUNNING (DIN/IEC 286 PART 3)
6. SEE SHEET 2

BEMERKUNGEN:

1. ABWICKELRICHTUNG
2. ABDECKBAND MIT BLISTERGURT VERSCHWEIßT
3. VERPACKUNG: 1100 BUCHSENSTECKER PRO SPULE
   13.8m BLISTERGURT PRO SPULE
   13.8m ABDECKBAND PRO SPULE
4. LÖTBEINCHEN 1. POS. BEI JEDEM STECKER WIE GEZEICHNET AUF SHEET 2
5. VERPACKUNG ENTSPRECHEND DIN/IEC 286 BZW. EIA 481 INKLUSIVE DER ANGABEN ÜBER DEN VOR- UND NACHLAUF (DIN/IEC 286 TEIL 3)
6. SIEHE SHEET 2

Das mit dieser Zeichnung vorgestellte Produkt wird hiermit zur Fertigung der notwendigen Produktionswerkzeuge freigegeben. Nachträgliche Änderungswünsche gehen zu Lasten des Auftraggebers.

.....
Datum, Firmenstempel und Unterschrift des Auftraggebers

			HV100 CONNECTOR, SMD, 4 POS.	6	6	4
	3					
	3		COVER TAPE B=21.4mm	TRANSPARENT	PET	3
	3		BLISTER BELT A=24mm	BLACK	PS	2
	3		REEL Ø380mm, C= 30.4mm	BLACK	PS	1
	0-1987001-4		DESCRIPTION	SURFACE COLOUR	MATERIAL	ITEM NO
ORDER NO						

THIS DRAWING IS A CONTROLLED DOCUMENT.

DIMENSIONS: mm

TOLERANCES UNLESS OTHERWISE SPECIFIED:
0 PLC ±
1 PLC ±
2 PLC ±
3 PLC ±
4 PLC ±
ANGLES ±°

MATERIAL: SEE TABLE
FINISH: SEE TABLE

DWN G.ACKERMANN 27MAR2007
CHK N.GEISTER 27MAR2007
APVD M.SCHAARSCHMIDT 29MAR2007
PRODUCT SPEC 108-19056
APPLICATION SPEC -
WEIGHT -

TE Connectivity

NAME HV100 RECEPTACLE CONNECTOR SINGLE ROW, SMD, PACKED IN BLISTER GOLD VERSION

SIZE	CAGE CODE	DRAWING NO	RESTRICTED TO
A2	00779	C-1987001	-

CUSTOMER DRAWING | SCALE 5:1 | SHEET 1 OF 2 | REV E

1471-9 (3/11)

Downloaded from Arrow.com.

THIS DRAWING IS UNPUBLISHED. RELEASED FOR PUBLICATION 2007
© COPYRIGHT 2007 BY - ALL RIGHTS RESERVED.

LOC	DIST
A1	–

REVISIONS

P	LTR	DESCRIPTION	DATE	DWN	APVD
	–	SEE SHEET 1	–	–	–

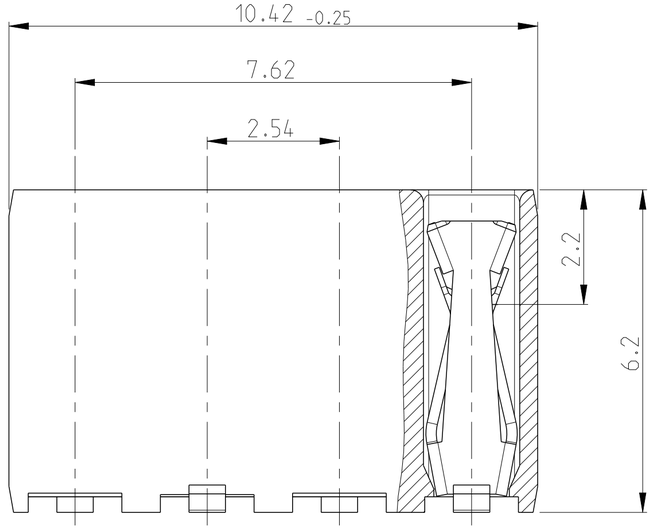

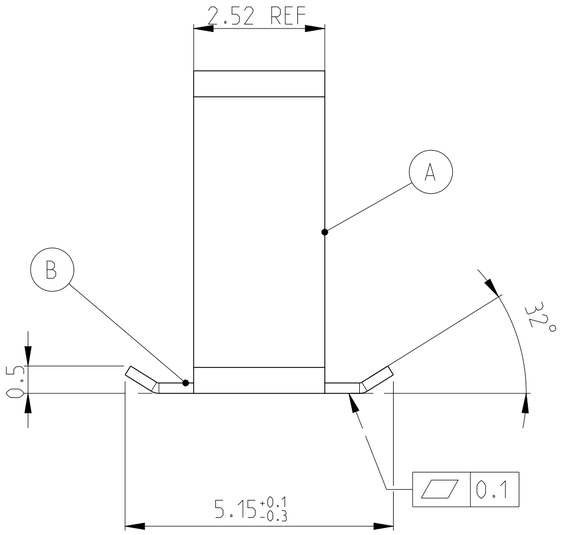

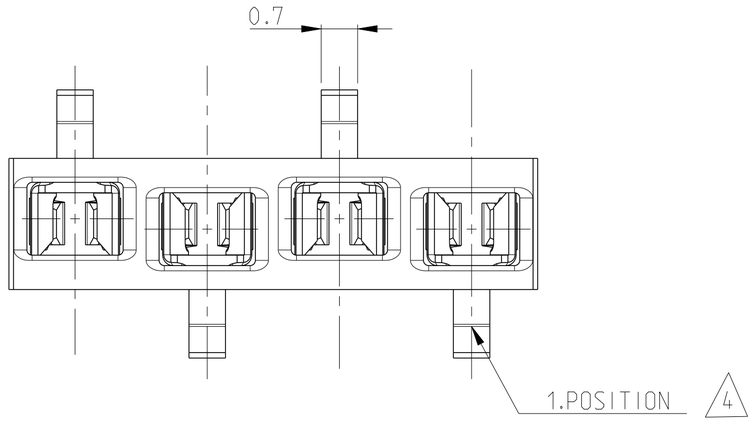

NOTE

7. CONTACT RANGE: 0.8 µm GOLD OVER 1.3 µm Ni
SOLDERING RANGE: 2.5 µm TIN OVER 1.3 µm Ni

8. CAN BE PLUGGED IN WITH MODU II PINS
∅0.63 OR □0.63 TOP OR BOTTOM ENTRY

9. ONLY WITH THE BOTTOM ENTRY

Recommended PCB Layout

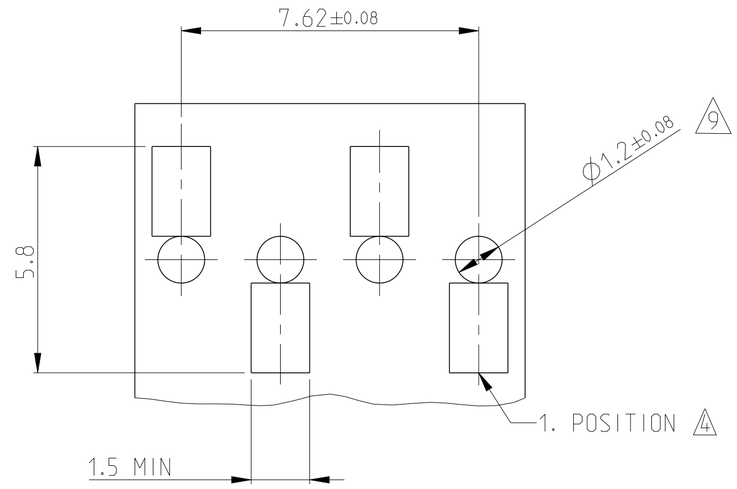

HV 100 CONTACT	CuSn	7	B
HV 100 HOUSING	LCP	BLACK	A
DESCRIPTION	MATERIAL	FINISH/ COLOR	SL.NO

THIS DRAWING IS A CONTROLLED DOCUMENT.

DIMENSIONS: mm

TOLERANCES UNLESS OTHERWISE SPECIFIED:
0 PLC ±
1 PLC ±
2 PLC ±
3 PLC ±
4 PLC ±
ANGLES ±°

MATERIAL SEE TABLE

FINISH SEE TABLE

DWN G.ACKERMANN 27MAR2007
CHK N.GEISTER 27MAR2007
APVD M.SCHAARSCHMIDT 29MAR2007
PRODUCT SPEC 108-19056
APPLICATION SPEC –
WEIGHT –

TE Connectivity

NAME HV100 RECEPTACLE CONNECTOR SINGLE ROW, SMD, PACKED IN BLISTER GOLD VERSION

SIZE	CAGE CODE	DRAWING NO	RESTRICTED TO
A2	00779	C-1987001	–

CUSTOMER DRAWING | SCALE 5:1 | SHEET 2 OF 2 | REV E

Downloaded from Arrow.com.