THIS DRAWING IS UNPUBLISHED. RELEASED FOR PUBLICATION 20
© COPYRIGHT 20 BY - ALL RIGHTS RESERVED.

LOC	DIST
AF	50

REVISIONS

P	LTR	DESCRIPTION	DATE	DWN	APVD
	B5	REVISED PER ECO-18-007263	09MAY2018	RS	DS
	B6	REVISED PER ECR-19-006167	07MAY2019	BDA	DH
	B7	REVISED PER ECR-19-017221	28JAN2020	BDA	DS
	C	REVISED PER ECN-22-147652	08APR2022	MK	ES

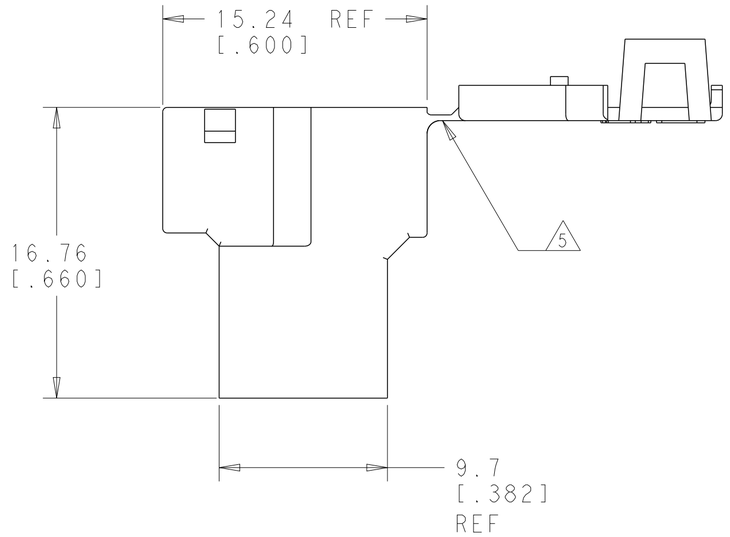

1. MATERIAL -NATURAL, 6 NYLON, 150°C, V0
2. MATERIAL -BLACK, 6 NYLON, 150°C, V0
3. MATERIAL -NATURAL, 66 NYLON, V2, GLOW WIRE MATERIAL
4. MATERIAL - NATURAL 66 NYLON V0, GLOW WIRE MATERIAL
5. REFER TO SPECIFICATION 408-143119 FOR GUIDANCE ON RE-MOISTURIZATION AND PART STORAGE

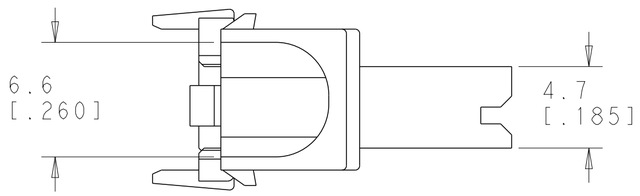

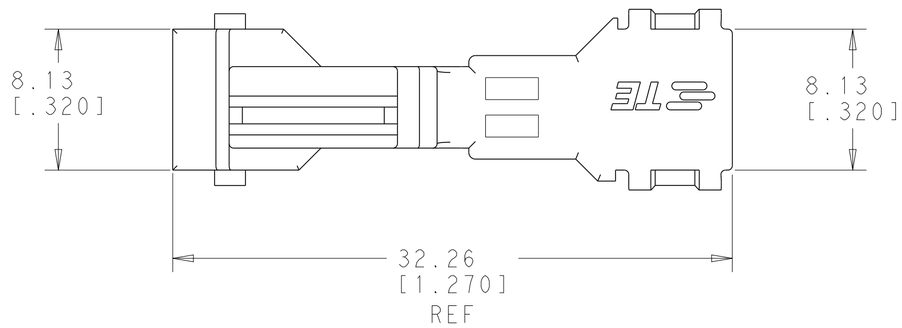

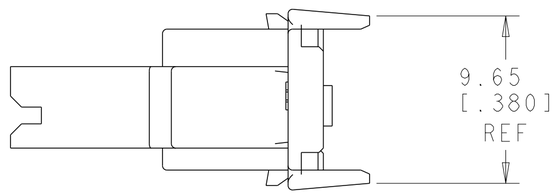

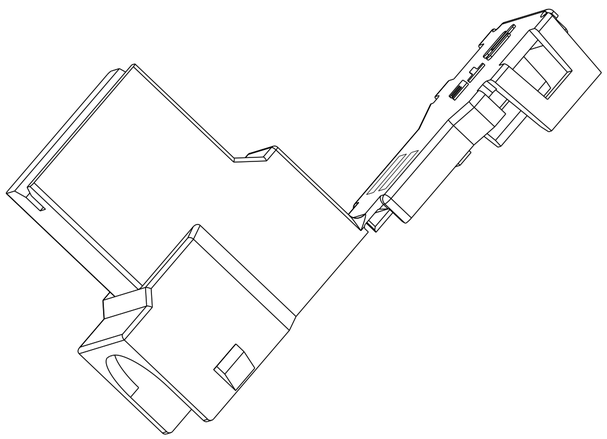

SUPERSEDED BY 1969507-9

4	1969507-9
3	~~1969507-4~~
2	1969507-3
1	1969507-2
MATERIAL	PART NO.

THIS DRAWING IS A CONTROLLED DOCUMENT.

DIMENSIONS: mm[INCHES]

TOLERANCES UNLESS OTHERWISE SPECIFIED:
0 PLC ±-
1 PLC ±-
2 PLC ±0.38 [.015]
3 PLC ±-
4 PLC ±-
ANGLES ±-

MATERIAL: SEE TABLE

FINISH: -

DWN JR RUTH 03APR12
CHK PETE DESANTIS 03APR12
APVD PETE DESANTIS 03APR12

PRODUCT SPEC -
APPLICATION SPEC -
WEIGHT -

TE Connectivity

NAME: HOUSING, RECEPTACLE, FLAG FASTON, CLOSED BACK, .250 SERIES
-

SIZE	CAGE CODE	DRAWING NO	RESTRICTED TO
A2	00779	C-1969507	-

CUSTOMER DRAWING | SCALE 4:1 | SHEET 1 OF 1 | REV C

1471-9 (3/11)

Downloaded from Arrow.com.