Sep.1.2025 Copyright 2025 HIROSE ELECTRIC CO., LTD. All Rights Reserved.
In case of consideration for using Automotive equipment / device which demand high reliability, kindly contact our sales window correspondents.

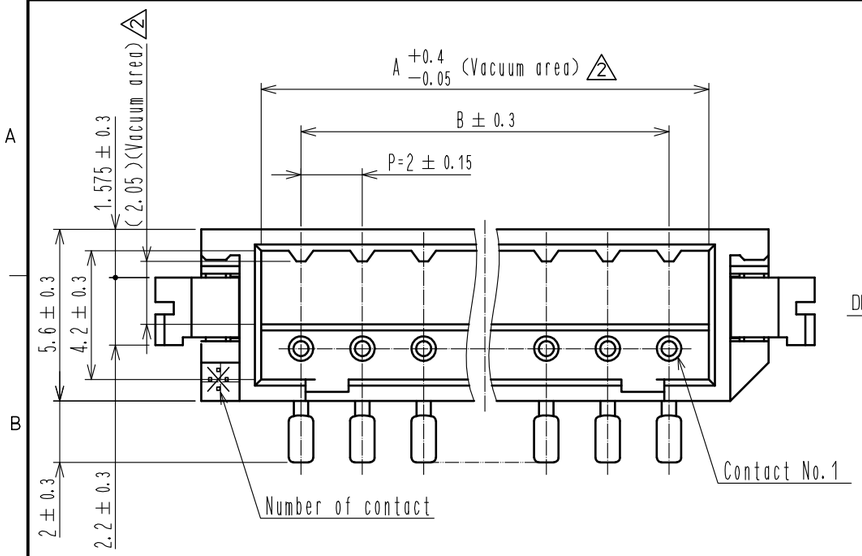

Mated connectors

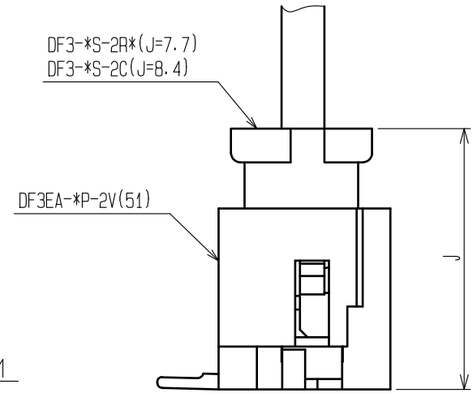

Recommended pattern

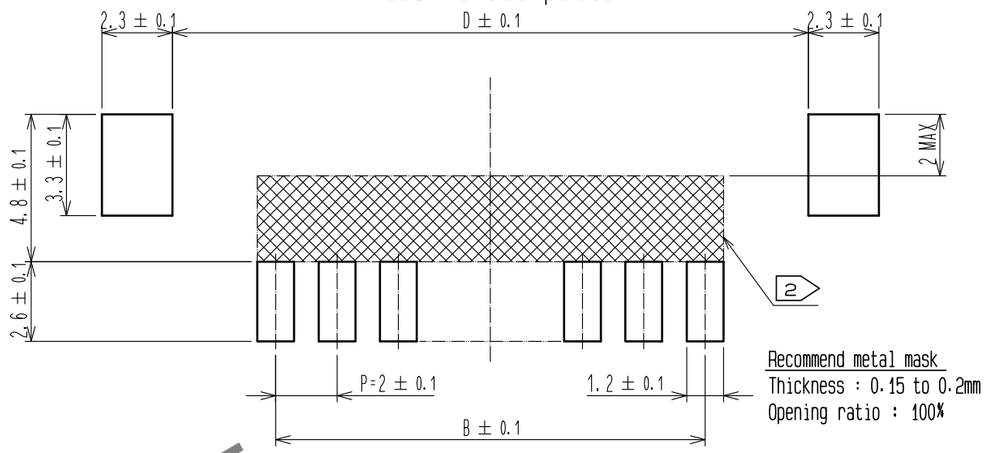

Recommend metal mask
Thickness : 0.15 to 0.2mm
Opening ratio : 100%

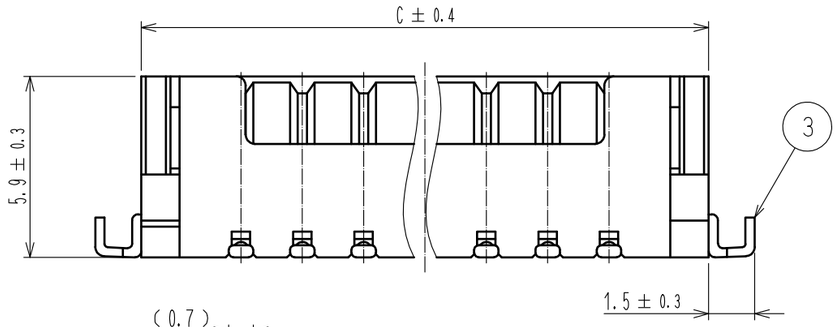

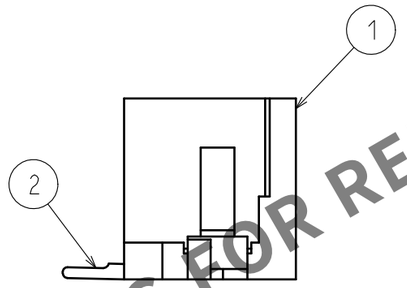

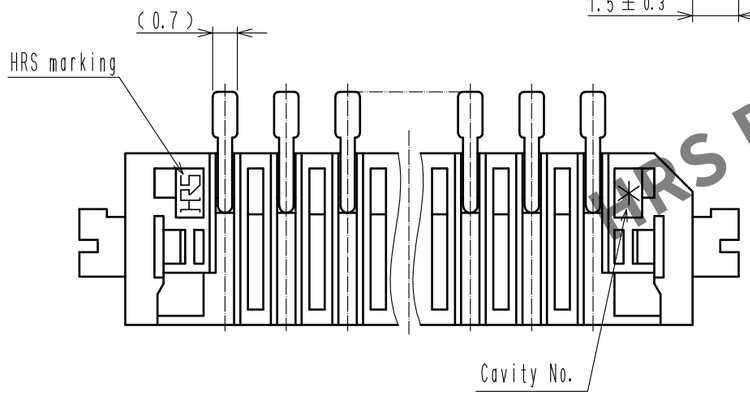

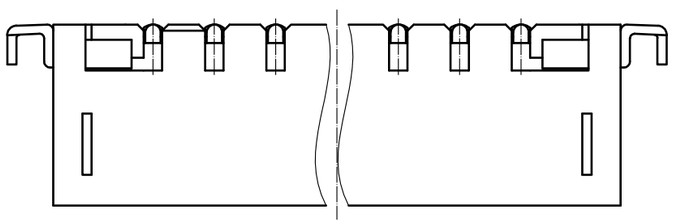

1 Configuration of 2 to 6 position

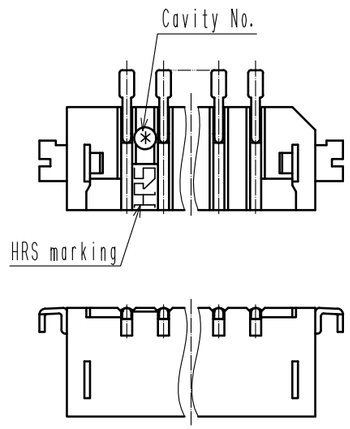

Part No.	Code No.	A	B	C	D
DF3EA- 2P-2V(51)	CL543-0315-0-51	4.6	2.0	8.5	8.74
DF3EA- 3P-2V(51)	CL543-0316-0-51	6.6	4.0	10.5	10.74
DF3EA- 4P-2V(51)	CL543-0317-0-51	8.6	6.0	12.5	12.74
DF3EA- 5P-2V(51)	CL543-0318-0-51	10.6	8.0	14.5	14.74
DF3EA- 6P-2V(51)	CL543-0319-0-51	12.6	10.0	16.5	16.74
DF3EA- 7P-2V(51)	CL543-0320-0-51	14.6	12.0	18.5	18.74
DF3EA- 8P-2V(51)	CL543-0321-0-51	16.6	14.0	20.5	20.74
DF3EA- 9P-2V(51)	CL543-0322-0-51	18.6	16.0	22.5	22.74
DF3EA-10P-2V(51)	CL543-0323-0-51	20.6	18.0	24.5	24.74
DF3EA-11P-2V(51)	CL543-0324-0-51	22.6	20.0	26.5	26.74
DF3EA-12P-2V(51)	CL543-0325-0-51	24.6	22.0	28.5	28.74
DF3EA-13P-2V(51)	CL543-0326-0-51	26.6	24.0	30.5	30.74
DF3EA-14P-2V(51)	CL543-0327-0-51	28.6	26.0	32.5	32.74
DF3EA-15P-2V(51)	CL543-0328-0-51	30.6	28.0	34.5	34.74

HRS DRAWING FOR REFERENCE

Notes 1 It shows configuration of 2 to 6 position.
2 If there is pattern on ▨ part, there is a possibility that is will make contact with the leads.
3. Lead co-planarity include reinforced metal fittings shall be 0.1mm MAX.

NO.	MATERIAL	FINISH . REMARKS
2	Brass	Surface:Gold plated 0.2μm MIN Under plating:Nickel plated 1μm MIN
1	Polyamide	Natural(Beige), UL94V-0

NO.	MATERIAL	FINISH . REMARKS
5	Polyester	Clear(Cover tape)
4	PS	Clear(Embossed carrier tape)
3	Brass	Surface:Tin plated 1μm MIN (Under plating)Nickel plated 1μm MIN

UNITS	SCALE	COUNT	DESCRIPTION OF REVISIONS	DESIGNED	CHECKED	DATE
mm	5 : 1	3	DIS-H-00006609	SN. MIWA	SZ. ONO	20201105

HRS HIROSE ELECTRIC CO., LTD.

APPROVED	KI. AKIYAMA	20160208
CHECKED	TS. FUKUSHIMA	20160205
DESIGNED	HT. SATO	20160205
DRAWN	MI. SAKIMURA	20160205

DRAWING NO. EDC-367142-51-00
PART NO. DF3EA-*P-2V(51)
CODE NO. CL543-
2 1/2

FORM HC0011-5-7

Downloaded from Arrow.com.

Sep.1.2025 Copyright 2025 HIROSE ELECTRIC CO., LTD. All Rights Reserved.
In case of consideration for using Automotive equipment / device which demand high reliability, kindly contact our sales window correspondents.

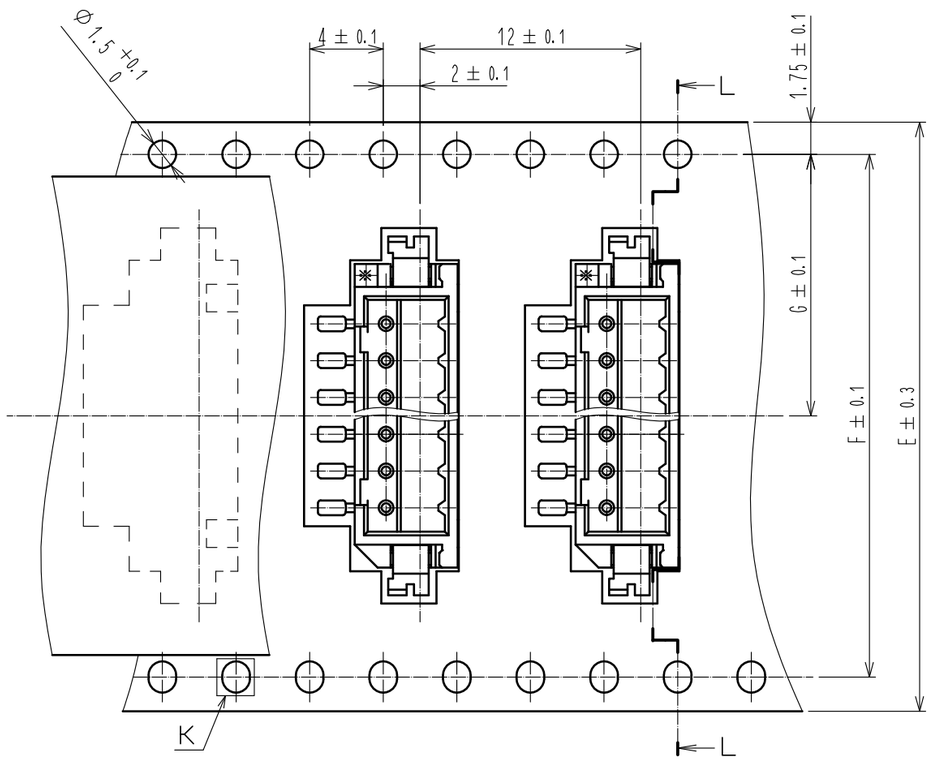

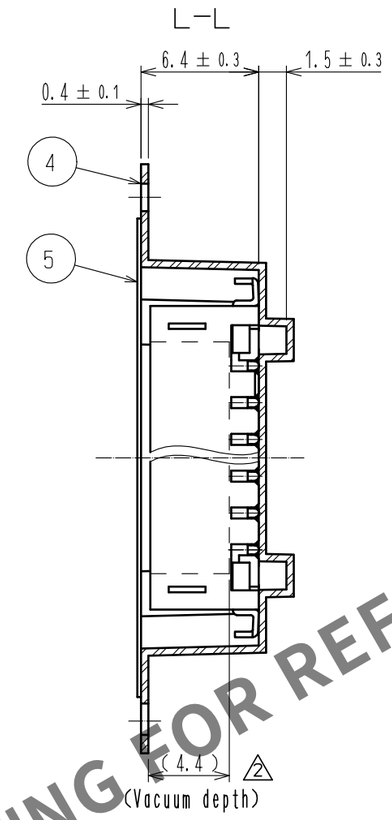

Direction of unreeling

Part No.	Code No.	Number of contact	E	F	G	H
DF3EA- 2P-2V(51)	CL543-0315-0-51	2	24.0		11.5	24.4
DF3EA- 3P-2V(51)	CL543-0316-0-51	3	24.0		11.5	24.4
DF3EA- 4P-2V(51)	CL543-0317-0-51	4	24.0		11.5	24.4
DF3EA- 5P-2V(51)	CL543-0318-0-51	5	32.0	28.4	14.2	32.4
DF3EA- 6P-2V(51)	CL543-0319-0-51	6	32.0	28.4	14.2	32.4
DF3EA- 7P-2V(51)	CL543-0320-0-51	7	32.0	28.4	14.2	32.4
DF3EA- 8P-2V(51)	CL543-0321-0-51	8	44.0	40.4	20.2	44.4
DF3EA- 9P-2V(51)	CL543-0322-0-51	9	44.0	40.4	20.2	44.4
DF3EA-10P-2V(51)	CL543-0323-0-51	10	44.0	40.4	20.2	44.4
DF3EA-11P-2V(51)	CL543-0324-0-51	11	56.0	52.4	26.2	56.4
DF3EA-12P-2V(51)	CL543-0325-0-51	12	56.0	52.4	26.2	56.4
DF3EA-13P-2V(51)	CL543-0326-0-51	13	56.0	52.4	26.2	56.4
DF3EA-14P-2V(51)	CL543-0327-0-51	14	56.0	52.4	26.2	56.4
DF3EA-15P-2V(51)	CL543-0328-0-51	15	56.0	52.4	26.2	56.4

HRS DRAWING FOR REFERENCE

K(10:1)

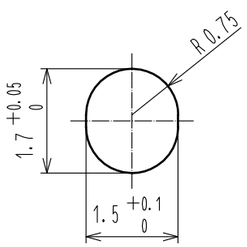

Style and dimension of reel

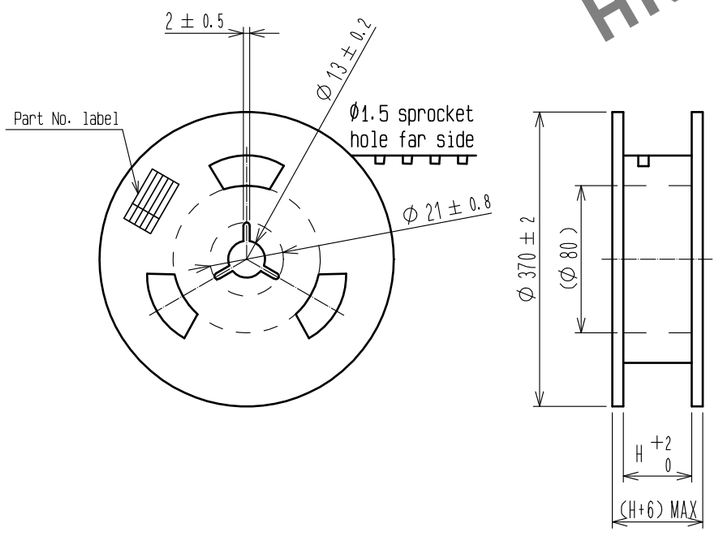

Supplier
Quantity
Part No.
Code No.
Date of manufactured

Detail of Part No. label

生産月日	年　月　日
図番	CL543−****−*−51
品名	DF3EA−*P−2V(51)
納入数量	1000Kロ
納入者	ヒロセ電機(株)

Notes
4. 1 reel 1000 connectors.
5. At the beginning of the reel, 30 boxes shall be empty.
   At The end of the reel, 20 boxes shall be empty.
6. When the tape width is 32, 44 and 56 mm, sprocket holes shall be set on both sides of reel as shown on this drawing.

HRS	DRAWING NO.	EDC-367142-51-00
	PART NO.	DF3EA-*P-2V(51)
	CODE NO.	CL543- 2 2/2

FORM HC0011-5-8

Downloaded from Arrow.com.