Intel® Pentium® III Processor for the SC242 at 450 MHz to 1.0 GHz

Datasheet

Product Features

- Available in 1.0B GHz, 933, 866, 800EB, 733, 667, 600B, 600EB, 533B, and 533EB MHz speeds support a 133 MHz system bus ('B' denotes support for a 133 MHz system bus where a processor is available at the same specific core frequency in seperate 100 MHz and 133 MHz Front Side Bus versions; 'E' denotes support for Advanced Transfer Cache and Advanced System Buffering)
- Available in 1.0 GHz, 850, 800, 750, 700, 650, 600E, 600, 550E, 550, 500, and 450 MHz speeds support a 100 MHz system bus ('E' denotes support for Advanced Transfer Cache and Advanced System Buffering)
- Available in versions that incorporate 256-KB Advanced Transfer Cache (on-die, full speed Level 2 (L2) cache with Error Correcting Code (ECC)) or versions that incorporate a discrete, half-speed, 512-KB in-package L2 cache with ECC
- Dual Independent Bus (DIB) architecture increases bandwidth and performance over single-bus processors
- Internet Streaming SIMD Extensions for enhanced video, sound and 3D performance
- Binary compatible with applications running on previous members of the Intel microprocessor line
- Dynamic execution micro architecture
- Power Management capabilities
  —System Management mode
  —Multiple low-power states
- Intel Processor Serial Number
- Optimized for 32-bit applications running on advanced 32-bit operating systems
- Single Edge Contact Cartridge (S.E.C.C.) and S.E.C.C.2 packaging technology; the S.E.C. cartridges deliver high performance with improved handling protection and socketability
- Integrated high performance 16 KB instruction and 16-KB data, nonblocking, level one cache
- Enables systems which are scaleable up to two processors
- Error-correcting code for System Bus data

The Intel® Pentium® III processor is designed for high-performance desktops and for workstations and servers. It is binary compatible with previous Intel Architecture processors. The Pentium III processor provides great performance for applications running on advanced operating systems such as Microsoft Windows* 98, Windows NT* and UNIX*. This is achieved by integrating the best attributes of Intel processors—the dynamic execution, Dual Independent Bus architecture plus Intel® MMX™ technology and Internet Streaming SIMD Extensions—bringing a new level of performance for systems buyers. ThePentium III processor is scaleable to two processors in a multiprocessor system and extends the power of the Intel® Pentium® II processor with performance headroom for business media, communication and internet capabilities. Systems based on Pentium III processors also include the latest features to simplify system management and lower the cost of ownership for large and small business environments. The Pentium III processor offers great performance for today's and tomorrow's applications.

SC242 / SECC2 Package

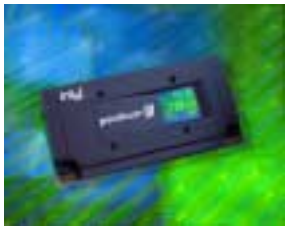

Document Number: 244452-009
July 2002

Downloaded from Arrow.com.

INFORMATION IN THIS DOCUMENT IS PROVIDED IN CONNECTION WITH INTEL® PRODUCTS. NO LICENSE, EXPRESS OR IMPLIED, BY ESTOPPEL OR OTHERWISE, TO ANY INTELLECTUAL PROPERTY RIGHTS IS GRANTED BY THIS DOCUMENT. EXCEPT AS PROVIDED IN INTEL'S TERMS AND CONDITIONS OF SALE FOR SUCH PRODUCTS, INTEL ASSUMES NO LIABILITY WHATSOEVER, AND INTEL DISCLAIMS ANY EXPRESS OR IMPLIED WARRANTY, RELATING TO SALE AND/OR USE OF INTEL PRODUCTS INCLUDING LIABILITY OR WARRANTIES RELATING TO FITNESS FOR A PARTICULAR PURPOSE, MERCHANTABILITY, OR INFRINGEMENT OF ANY PATENT, COPYRIGHT OR OTHER INTELLECTUAL PROPERTY RIGHT. Intel products are not intended for use in medical, life saving, or life sustaining applications.

Intel may make changes to specifications and product descriptions at any time, without notice.

Designers must not rely on the absence or characteristics of any features or instructions marked “reserved” or “undefined”. Intel reserves these for future definition and shall have no responsibility whatsoever for conflicts or incompatibilities arising from future changes to them.

The Pentium® III processor may contain design defects or errors known as errata which may cause the product to deviate from published specifications. Current characterized errata are available on request.

Contact your local Intel sales office or your distributor to obtain the latest specifications and before placing your product order.

Copies of documents which have an ordering number and are referenced in this document, or other Intel literature may be obtained by calling 1-800-548-4725 or by visiting Intel's website at http://www.intel.com.

Intel, Pentium, Celeron, MMX, and the Intel logo are trademarks or registered trademarks of Intel Corporation or its subsidiaries in the United States and other countries.

*Other names and brands may be claimed as the property of others.

Copyright © 2002, Intel Corporation

Datasheet

Downloaded from Arrow.com.

Contents

1.0 Introduction 9

1.1 Terminology 10
1.1.1 S.E.C.C.2 and S.E.C.C. Packaged Processor Terminology 10
1.1.2 Processor Naming Convention 11
1.2 Related Documents 12

2.0 Electrical Specifications 13

2.1 Processor System Bus and V_{REF} 13
2.2 Clock Control and Low Power States 14
2.2.1 Normal State—State 1 15
2.2.2 AutoHALT Powerdown State—State 2 15
2.2.3 Stop-Grant State—State 3 15
2.2.4 HALT/Grant Snoop State—State 4 16
2.2.5 Sleep State—State 5 16
2.2.6 Deep Sleep State—State 6 16
2.2.7 Clock Control 17
2.3 Power and Ground Pins 17
2.4 Decoupling Guidelines 17
2.4.1 Processor VCC_{CORE} Decoupling 18
2.4.2 Processor System Bus AGTL+ Decoupling 18
2.5 Processor System Bus Clock and Processor Clocking 18
2.6 Voltage Identification 18
2.7 Processor System Bus Unused Pins 20
2.8 Processor System Bus Signal Groups 20
2.8.1 Asynchronous vs. Synchronous for System Bus Signals 21
2.8.2 System Bus Frequency Select Signal (BSEL0) 22
2.9 Test Access Port (TAP) Connection 23
2.10 Maximum Ratings 24
2.11 Processor DC Specifications 25
2.12 AGTL+ System Bus Specifications 32
2.13 System Bus AC Specifications 32

3.0 Signal Quality Specifications 40

3.1 BCLK, PICCLK, and PWRGOOD Signal Quality Specifications and Measurement Guidelines 40
3.2 AGTL+ and Non-AGTL+ Overshoot/Undershoot Specifications and Measurement Guidelines 41
3.2.1 Overshoot/Undershoot Magnitude 41
3.2.2 Overshoot/Undershoot Pulse Duration 42
3.2.3 Overshoot/Undershoot Activity Factor 42
3.2.4 Reading Overshoot/Undershoot Specification Tables 43
3.2.5 Determining If a System Meets the Overshoot/Undershoot Specifications 44
3.3 AGTL+ and Non-AGTL+ Ringback Specifications and Measurement Guidelines 46
3.3.1 Settling Limit Guideline 48

Downloaded from Arrow.com.

4.0 Thermal Specifications and Design Considerations 49
4.1 Thermal Specifications 50
4.1.1 Thermal Diode 53
5.0 S.E.C.C. and S.E.C.C.2 Mechanical Specifications 54
5.1 S.E.C.C. Mechanical Specifications 54
5.2 S.E.C.C.2 Mechanical Specification 61
5.3 S.E.C.C.2 Structural Mechanical Specification 67
5.4 Processor Package Materials Information 69
5.5 Intel® Pentium® III Processor Signal Listing 69
5.6 Intel® Pentium® III Processor Core Pad to Substrate Via Assignments 76
5.6.1 Processor Core Pad Via Assignments (CPUID=067xh) 76
5.6.2 Processor Core Signal Assignments (CPUID=067xh) 76
5.6.3 Processor Core Pad Via Assignments (CPUID=068xh) 87
6.0 Boxed Processor Specifications 88
6.1 Introduction 88
6.2 Fan Heatsink Mechanical Specifications 88
6.2.1 Intel® Boxed Processor Fan Heatsink Dimensions 88
6.2.2 Intel® Boxed Processor Fan Heatsink Weight 90
6.2.3 Intel® Boxed Processor Retention Mechanism 90
6.3 Fan Heatsink Electrical Requirements 91
6.3.1 Fan Heatsink Power Supply 91
6.4 Fan Heatsink Thermal Specifications 92
6.4.1 Intel® Boxed Processor Cooling Requirements 92
7.0 Intel® Pentium® III Processor Signal Description 93
7.1 Alphabetical Signals Reference 93
7.2 Signal Summaries 100

Downloaded from Arrow.com.

Figures

1 Second Level (L2) Cache Implementation 9
2 AGTL+ Bus Topology 14
3 Stop Clock State Machine 14
4 BSEL[1:0] Example for a 100 MHz System Design (100 MHz Processor Installed) 22
5 BSEL[1:0] Example for a 100/133 MHz Capable System (100 MHz Processor Installed) 23
6 BSEL[1:0] Example for a 100/133 MHz Capable System (133 MHz Processor Installed) 23
7 BCLK, PICCLK, and TCK Generic Clock Waveform 37
8 System Bus Valid Delay Timings 38
9 System Bus Setup and Hold Timings 38
10 System Bus Reset and Configuration Timings 38
11 Power-On Reset and Configuration Timings 39
12 Test Timings (TAP Connection) 39
13 Test Reset Timings 39
14 BCLK and PICCLK Generic Clock Waveform 40
15 Maximum Acceptable AGTL+ and Non-AGTL+ Overshoot/Undershoot Waveform 46
16 Low to High AGTL+ and Non-AGTL+ Receiver Ringback Tolerance 48
17 Signal Overshoot/Undershoot, Settling Limit, and Ringback 48
18 S.E.C.Cartridge — 3-Dimensional View 49
19 S.E.C.Cartridge 2 — Substrate View 50
20 Processor Functional Die Layout (CPUID=0686h) 52
21 Processor Functional Die Layout (up to CPUID=0683h) 52
22 S.E.C.C. Packaged Processor — Multiple Views 54
23 S.E.C.C. Packaged Processor — Extended Thermal Plate Side Dimensions 55
24 S.E.C.C. Packaged Processor — Bottom View Dimensions 55
25 S.E.C.C. Packaged Processor — Latch Arm, Extended Thermal Plate Lug, and Cover Lug Dimensions 56
26 S.E.C.C. Packaged Processor — Latch Arm, Extended Thermal Plate, and Cover Detail Dimensions (Reference Dimensions Only) 57
27 S.E.C.C. Packaged Processor — Extended Thermal Plate Attachment Detail Dimensions 58
29 S.E.C.C. Packaged Processor Substrate — Edge Finger Contact Dimensions 59
28 S.E.C.C. Packaged Processor — Extended Thermal Plate Attachment Detail Dimensions, Continued 59
30 S.E.C.C. Packaged Processor Substrate — Edge Finger Contact Dimensions, Detail A 60
31 Intel® Pentium® III Processor Markings (S.E.C.C. Packaged Processor) 60
32 S.E.C.C.2 Packaged Processor — Multiple Views 61
33 S.E.C.C.2 Packaged Processor Assembly — Primary View 62
34 S.E.C.C.2 Packaged Processor Assembly — Cover View with Dimensions 62
35 S.E.C.C.2 Packaged Processor Assembly — Heatsink Attach Boss Section 63
36 S.E.C.C.2 Packaged Processor Assembly — Side View 63
37 Detail View of Cover in the Vicinity of the Substrate Attach Features 63
38 S.E.C.C.2 Packaged Processor Substrate — Edge Finger Contact Dimensions 64

Downloaded from Arrow.com.

39 S.E.C.C.2 Packaged Processor Substrate — Edge Finger Contact Dimensions (Detail A) 64
40 S.E.C.C.2 Packaged Processor Substrate (CPUID=067xh) — Keep-In Zones 65
41 S.E.C.C.2 Packaged Processor Substrate (CPUID=068xh) — Keep-In Zones 65
42 S.E.C.C.2 Packaged Processor Substrate (CPUID=067xh) — Keep-Out Zone 66
43 S.E.C.C.2 Packaged Processor Substrate (CPUID=068xh) — Keep-Out Zone 66
44 Intel® Pentium® III Processor Markings (S.E.C.C.2 Package) 67
45 Substrate Deflection away from Heatsink 67
46 Substrate Deflection toward the Heatsink 68
47 S.E.C.C.2 Packaged Processor Specifications 68
48 Processor Core Pad Via Assignments 76
49 Intel® Pentium® III Processor S.E.C.C. 2 Via Map 87
50 Boxed Intel® Pentium® III Processor in the S.E.C.C.2 Packaging (Fan Power Cable Not Shown) 88
51 Side View Space Requirements for the Intel® Boxed Processor with S.E.C.C.2 Packaging 89
52 Front View Space Requirements for the Intel® Boxed Processor with S.E.C.C.2 Packaging 89
53 Top View Air Space Requirements for the Intel® Boxed Processor 90
54 Intel® Boxed Processor Fan Heatsink Power Cable Connector Description 91
55 Recommended Baseboard Power Header Placement Relative to Fan Power Connector and Intel® Pentium® III Processor 92

Tables

1 Processor Identification 11
2 Related Documents 12
3 Voltage Identification Definition 19
4 System Bus Signal Groups 21
5 Frequency Select Truth Table for BSEL[1:0] 22
6 Absolute Maximum Ratings (CPUID=067xh) 24
7 Absolute Maximum Ratings (CPUID=068xh) 25
8 Voltage and Current Specifications 26
9 AGTL+ Signal Groups DC Specifications 31
10 Non-AGTL+ Signal Group DC Specifications 31
11 AGTL+ Bus Specifications 32
12 System Bus AC Specifications (Clock) at Processor Core Pins 33
13 Valid System Bus, Core Frequency, and Cache Bus Frequencies 34
14 System Bus AC Specifications (AGTL+ Signal Group) at the Processor Core Pins 35
15 System Bus AC Specifications (CMOS Signal Group) at the Processor Core Pins 35
16 System Bus AC Specifications (Reset Conditions) 35
17 System Bus AC Specifications (APIC Clock and APIC I/O) at the Processor Core Pins 36

Downloaded from Arrow.com.

18 System Bus AC Specifications (TAP Connection) at the Processor Core Pins....36
19 BCLK, PICCLK, and PWRGOOD Signal Quality Specifications at the Processor Core....40
20 100 MHz AGTL+ Signal Group Overshoot/Undershoot Tolerance....44
21 133 MHz AGTL+ Signal Group Overshoot/Undershoot Tolerance....45
22 33 MHz Non-AGTL+ Signal Group Overshoot/Undershoot Tolerance....45
23 Signal Ringback Specifications for Signal Simulation....47
24 AGTL+ and Non-AGTL+ Signal Groups Ringback Tolerance Specifications....47
25 Thermal Specifications for S.E.C.C. Packaged Processors....50
26 Thermal Specifications for S.E.C.C.2 Packaged Processors....51
27 Thermal Diode Parameters....53
28 Thermal Diode Interface....53
29 Description Table for Processor Markings (S.E.C.C. Packaged Processor)....61
30 Description Table for Processor Markings (S.E.C.C.2 Packaged Processor)....67
31 S.E.C.C.2 Pressure Specifications....68
32 S.E.C.C. Materials....69
33 S.E.C.C.2 Materials....69
34 Signal Listing in Order by Pin Number....70
35 Signal Listing in Order by Signal Name....73
36 Via Listing in Order by Signal Name....77
37 Via Listing in Order by VIA Location....82
38 Intel® Boxed Processor Fan Heatsink Spatial Dimensions....90
39 Fan Heatsink Power and Signal Specifications....91
40 Baseboard Fan Power Connector Location....92
41 Signal Description....93
42 Output Signals....100
43 Input Signals....100
44 Input/Output Signals (Single Driver)....101
45 Input/Output Signals (Multiple Driver)....101

Downloaded from Arrow.com.

Revision History

Revision	Description	Date
-009	• Removed 1.13 GHz processor frequency. Minor edits for clarity.	July 2002

Downloaded from Arrow.com.

1.0 Introduction

The Intel® Pentium® III processor is the next member of the P6 family, in the Intel® IA-32 processor line. Like the Intel® Pentium® II processor, the Pentium III processor implements the Dynamic Execution microarchitecture - a unique combination of multiple branch prediction, data flow analysis, and speculative execution. This enables these processors to deliver higher performance than the Pentium processor, while maintaining binary compatibility with all previous Intel Architecture processors. The Pentium III processor also executes Intel® MMX™ technology instructions for enhanced media and communication performance just as it's predecessor, the Pentium II processor. The Pentium III processor executes Internet Streaming SIMD Extensions for enhanced floating point and 3-D application performance. In addition, the Pentium III processor extends the concept of processor identification with the addition of a processor serial number. Refer to the *Intel® Processor Serial Number* application note (Document Number 245125) for more detailed information. The Pentium III processor utilizes multiple low-power states such as AutoHALT, Stop-Grant, Sleep, and Deep Sleep to conserve power during idle times.

The Pentium III processor utilizes the same multiprocessing system bus technology as the Pentium II processor. This allows for a higher level of performance for both uni-processor and two-way multiprocessor (2-way MP) systems. See the *Intel® Pentium® III Processor Specification Update* (Document Number 244453) for guidelines on which processors can be mixed in an MP system. Memory is cacheable for 4 GB of addressable memory space, allowing significant headroom for desktop systems.

The Pentium III processor is available with two different second level (L2) cache implementations. The "Discrete" cache version (CPUID=067xh) uses commercially available parts for the L2 cache. The L2 cache is composed of an external (to processor silicon) TagRAM and burst pipelined synchronous static RAM (BSRAM), as seen in Figure 1. The "Advanced Transfer Cache" (CPUID=068xh) does not use commercially available L2 cache parts. Its L2 cache resides entirely within the processor silicon, as seen in Figure 1. Refer to Table 1 to determine the L2 cache implementation for each Pentium III processor.

Pentium III processors are offered in either Single Edge Contact Cartridge (S.E.C.C.) or Single Edge Contact Cartridge 2 (S.E.C.C.2) package technologies. The S.E.C.C. package has the following features: an extended thermal plate, a cover, and a substrate with an edge finger connection. The extended thermal plate allows heatsink attachment or customized thermal solutions. The S.E.C.C.2 package has a cover and a substrate with an edge finger connection. This allows the thermal solutions to be placed directly onto the processor core package. The edge finger connection maintains socketability for system configuration. The edge finger connector is called the 'SC242 connector' in this and other documentation.

Figure 1. Second Level (L2) Cache Implementation

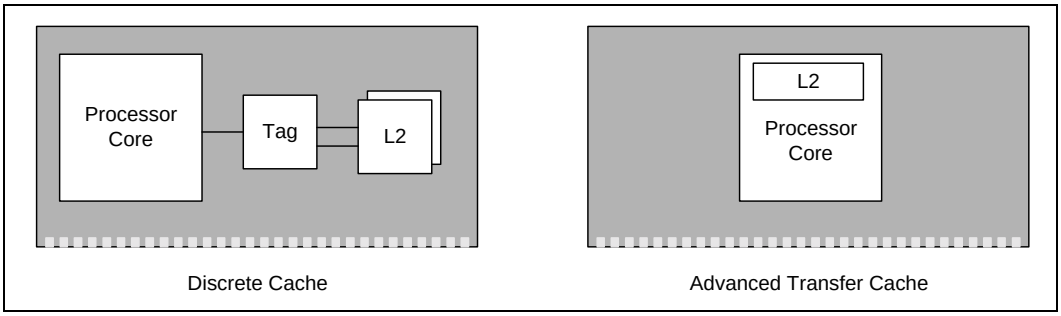

Downloaded from Arrow.com.

1.1 Terminology

In this document, a '#' symbol after a signal name refers to an active low signal. This means that a signal is in the active state (based on the name of the signal) when driven to a low level. For example, when FLUSH# is low, a flush has been requested. When NMI is high, a nonmaskable interrupt has occurred. In the case of signals where the name does not imply an active state but describes part of a binary sequence (such as *address* or *data*), the '#' symbol implies that the signal is inverted. For example, D[3:0] = 'HLHL' refers to a hex 'A', and D[3:0]# = 'LHLH' also refers to a hex 'A' (H= High logic level, L= Low logic level).

The term "system bus" refers to the interface between the processor, system core logic (a.k.a. the AGPset components), and other bus agents. The system bus is a multiprocessing interface to processors, memory, and I/O. The term "cache bus" refers to the interface between the processor and the L2 cache components (TagRAM and BSRAMs). The cache bus does NOT connect to the system bus, and is not visible to other agents on the system bus.

1.1.1 S.E.C.C.2 and S.E.C.C. Packaged Processor Terminology

The following terms are used often in this document and are explained here for clarification:

- **Pentium® III processor**—The entire product including internal components, substrate, cover and in S.E.C.C. packaged processors, an extended thermal plate.
- **S.E.C.C.**—The processor package technology called "Single Edge Contact Cartridge."
- **S.E.C.C.2**—The follow-on to S.E.C.C. processor package technology. This differs from its predecessor in that it has no extended thermal plate, thus reducing thermal resistance.
- **Processor substrate**—The FR4 board on which components are mounted inside the S.E.C.C. or S.E.C.C.2 packaged processor (with or without components attached).
- **Processor core**—The processor's execution engine.
- **Extended Thermal Plate**—This S.E.C.C. package feature is the surface used to attach a heatsink or other thermal solution to the processor.
- **Cover**—The plastic casing that covers the backside of the substrate.
- **Latch arms**—An S.E.C.C. package feature which can be used as a means for securing the processor in a retention mechanism.
- **OLGA** - Organic Land Grid Array. This package technology permits attaching the heatsink directly to the die.

Additional terms referred to in this and other related documentation:

- **SC242**—The 242-contact slot connector (previously referred to as Slot 1 connector) that the S.E.C.C. and S.E.C.C.2 plug into, just as the Pentium® Pro processor uses Socket 8.
- **Retention mechanism**—A mechanical piece which holds the S.E.C.C. or S.E.C.C.2 packaged processor in the SC242 connector.
- **Heatsink support**—The support pieces that are mounted on the baseboard to provide added support for heatsinks.
- **Keep-out zone**—The area on or near an S.E.C.C. or S.E.C.C.2 packaged processor substrate that systems designs can not utilize.
- **Keep-in zone**—The area of the center of an S.E.C.C. or S.E.C.C.2 packaged processor substrate that thermal solutions may utilize.

The L2 cache, TagRAM and BSRAM die, are industry designated names.

Downloaded from Arrow.com.

1.1.2 Processor Naming Convention

A letter(s) is added to certain processors (e.g., 600B MHz) when the core frequency alone may not uniquely identify the processor. Below is a summary what the letter means as well as a table listing all Pentium III processors currently available.

- "B" — 133 MHz System Bus Frequency
- "E" — Processor with "Advanced Transfer Cache" (CPUID=068xh)

Table 1. Processor Identification

Processor	Core Frequency (MHz)	System Bus Frequency (MHz)	L2 Cache Size (Kbytes)	L2 Cache Type	CPUID[1]
450	450	100	512	Discrete	067xh
500	500	100	512	Discrete	067xh
533B	533	133	512	Discrete	067xh
533EB	533	133	256	ATC[2]	068xh
550	550	100	512	Discrete	067xh
550E	550	100	256	ATC[2]	068xh
600	600	100	512	Discrete	067xh
600B	600	133	512	Discrete	067xh
600E	600	100	256	ATC[2]	068xh
600EB	600	133	256	ATC[2]	068xh
650	650	100	256	ATC[2]	068xh
667	667	133	256	ATC[2]	068xh
700	700	100	256	ATC[2]	068xh
733	733	133	256	ATC[2]	068xh
750	750	100	256	ATC[2]	068xh
800	800	100	256	ATC[2]	068xh
800EB	800	133	256	ATC[2]	068xh
850	850	100	256	ATC[2]	068xh
866	866	133	256	ATC[2]	068xh
933	933	133	256	ATC[2]	068xh
1.0 GHz	1000	100	256	ATC[2]	068xh
1.0B GHz	1000	133	256	ATC[2]	068xh

NOTES:
1. Refer to the *Intel® Pentium® III Processor Specification Update* for the exact CPUID for each processor.
2. ATC = Advanced Transfer Cache. ATC is an L2 Cache integrated on the same die as the processor core. With ATC, the interface between the processor core and L2 Cache is 256-bits wide, runs at the same frequency as the processor core and has enhanced buffering.

Downloaded from Arrow.com.

1.2 Related Documents

The reader of this specification should also be familiar with material and concepts in the documents listed in Table 2. These documents, and a complete list of Pentium III processor reference material, can be found on the Intel Developers' Insight web site located at http://developer.intel.com.

Table 2. Related Documents

Document	Intel Document Number
AP-485, *Intel® Processor Identification and the CPUID Instruction*	241618
AP-585, *Intel®Pentium® II Processor GTL+ Guidelines*	243330
AP-588, *Mechanical and Assembly Technology for S.E.C. Cartridge Processors*	243333
AP-589, *Design for EMI*	243334
AP-826, *Mechanical Assembly and Customer Manufacturing Technology for S.E.P. Packages*	243748
AP-902, *S.E.C.C.2 Heatsink Installation and Removal*	244454
AP-903, *Mechanical Assembly and Customer Manufacturing Technology for Processor in S.E.C.C.2 Packages*	244457
AP-905, *Intel® Pentium® III Processor Thermal Design Guidelines*	245087
AP-906, *100 MHz AGTL+ Layout Guidelines for the Intel® Pentium® III Processor and Intel® 440BX AGPset*	245086
AP-907, *Intel® Pentium® III Processor Power Distribution Guidelines*	245085
Intel® Processor Serial Number	245119
CK97 Clock Synthesizer Design Guidelines	243867
Intel® Architecture Software Developer's Manual	243193
Volume I: Basic Architecture	243190
Volume II: Instruction Set Reference	243191
Volume III: System Programming Guide	243192
P6 Family of Processors Hardware Developer's Manual	244001
Intel® Pentium® II Processor at 350, 400 and 450 MHz datasheet	243657
Intel® Pentium® II Processor Developer's Manual	243502
Pentium® III Processor I/O Buffer Models	Note 1
Intel® Pentium® III Processor Specification Update	244453
SC242 Bus Termination Card Design Guidelines	243409
Slot 1 Connector Specification	243397
VRM 8.4 DC-DC Converter Design Guidelines	245335

NOTES:
1. These models are available in Viewlogic* XTK* model format (formerly known as QUAD format) at the Intel Developer's Website at http://developer.intel.com.

Downloaded from Arrow.com.

2.0 Electrical Specifications

2.1 Processor System Bus and V_{REF}

Most Pentium III processor signals use a variation of the low voltage Gunning Transceiver Logic (GTL) signaling technology.

The Pentium Pro processor system bus specification is similar to the GTL specification, but was enhanced to provide larger noise margins and reduced ringing. The improvements are accomplished by increasing the termination voltage level and controlling the edge rates. This specification is different from the GTL specification, and is referred to as GTL+. For more information on GTL+ specifications, see the GTL+ buffer specification in the *Intel® Pentium® II Processor Developer's Manual* (Document Number 243502).

The Pentium III processor varies from the Pentium Pro processor in its output buffer implementation. The buffers that drive the system bus signals on the Pentium III processor are actively driven to V_{TT} for one clock cycle after the low to high transition to improve rise times. These signals should still be considered open-drain and require termination to a supply that provides the high signal level. Because this specification is different from the GTL+ specification, it is referred to as AGTL+ in this and other documentation. AGTL+ logic and GTL+ logic are compatible with each other and may both be used on the same system bus. For more information on AGTL+ routing, see AP-906, *100 MHz AGTL+ Layout Guidelines for the Pentium III® Processor and Intel® 440BX AGPset* (Document Number 245086) or the appropriate platform design guide.

AGTL+ inputs use differential receivers which require a reference signal (V_{REF}). V_{REF} is used by the receivers to determine if a signal is a logical 0 or a logical 1, and is generated on the S.E.C.C. and S.E.C.C.2 packages for the processor core. Local V_{REF} copies should be generated on the baseboard for all other devices on the AGTL+ system bus. Termination (usually a resistor at each end of the signal trace) is used to pull the bus up to the high voltage level and to control reflections on the transmission line. The processor contains termination resistors that provide termination for one end of the Pentium III processor system bus. These specifications assume another resistor at the end of each signal trace to ensure adequate signal quality for the AGTL+ signals; see Table 11 for the bus termination voltage specifications for AGTL+. Refer to the *Intel® Pentium® II Processor Developer's Manual* (Document Number 243502) for the GTL+ bus specification. Solutions exist for single-ended termination as well, though this implementation changes system design. Figure 2 is a schematic representation of AGTL+ bus topology with Pentium III processors.

The AGTL+ bus depends on incident wave switching. Therefore timing calculations for AGTL+ signals are based on flight time as opposed to capacitive deratings. Analog signal simulation of the Pentium III processor system bus including trace lengths is highly recommended when designing a system with a heavily loaded AGTL+ bus, especially for systems using a single set of termination resistors (i.e., those on the processor substrate). Such designs will not match the solution space allowed for by installation of termination resistors on the baseboard. See Intel's Developer's Website (http://developer.intel.com) to download the *Intel® Pentium® III Processor I/O Buffer Models, Viewlogic* XTK* model format* (formerly known as QUAD format).

Downloaded from Arrow.com.

Figure 2. AGTL+ Bus Topology

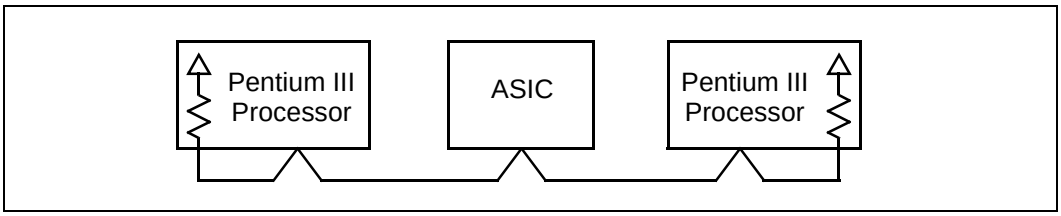

2.2 Clock Control and Low Power States

Pentium III processors allow the use of AutoHALT, Stop-Grant, Sleep, and Deep Sleep states to reduce power consumption by stopping the clock to internal sections of the processor, depending on each particular state. See Figure 3 for a visual representation of the Pentium III processor low power states.

Figure 3. Stop Clock State Machine

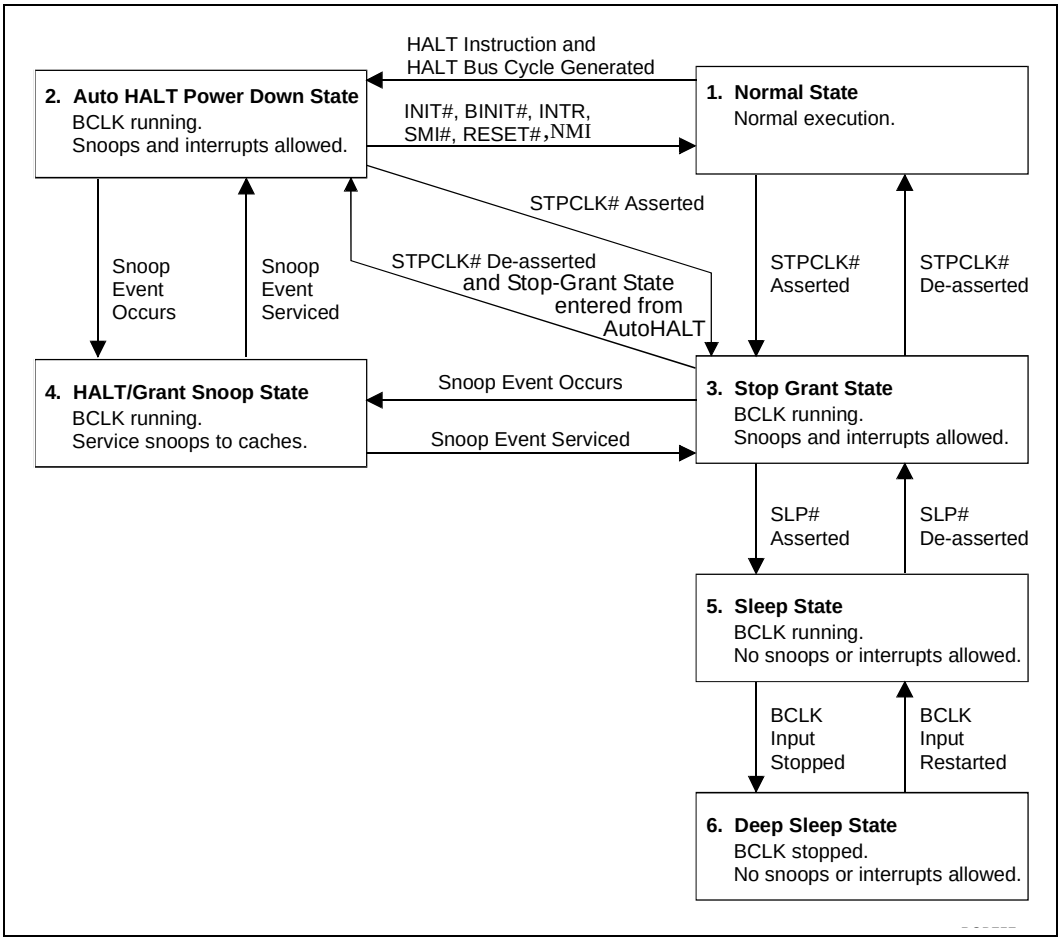

Downloaded from Arrow.com.

For the processor to fully realize the low current consumption of the Stop-Grant, Sleep, and Deep Sleep states, a Model Specific Register (MSR) bit must be set. For the MSR at 02Ah (Hex), bit 26 must be set to a '1' (this is the power on default setting) for the processor to stop all internal clocks during these modes. For more information, see the *Intel Architecture Software Developer's Manual, Volume 3: System Programming Guide* (Document Number 243192).

Due to the inability of processors to recognize bus transactions during the Sleep and Deep Sleep states, 2-way MP systems are not allowed to have one processor in Sleep/Deep Sleep state and the other processor in Normal or Stop-Grant state simultaneously.

2.2.1 Normal State—State 1

This is the normal operating state for the processor.

2.2.2 AutoHALT Powerdown State—State 2

AutoHALT is a low power state entered when the processor executes the HALT instruction. The processor will transition to the Normal state upon the occurrence of SMI#, BINIT#, INIT#, or LINT[1:0] (NMI, INTR). RESET# will cause the processor to immediately initialize itself.

The return from a System Management Interrupt (SMI) handler can be to either Normal Mode or the AutoHALT Power Down state. See the *Intel Architecture Software Developer's Manual, Volume III: System Programmer's Guide* (Document Number 243192) for more information.

FLUSH# will be serviced during the AutoHALT state, and the processor will return to the AutoHALT state.

The system can generate a STPCLK# while the processor is in the AutoHALT Power Down state. When the system deasserts the STPCLK# interrupt, the processor will return execution to the HALT state.

2.2.3 Stop-Grant State—State 3

The Stop-Grant state on the processor is entered when the STPCLK# signal is asserted.

Since the AGTL+ signal pins receive power from the system bus, these pins should not be driven (allowing the level to return to V_{TT}) for minimum power drawn by the termination resistors in this state. In addition, all other input pins on the system bus should be driven to the inactive state.

BINIT# and FLUSH# will not be serviced during Stop-Grant state.

RESET# will cause the processor to immediately initialize itself, but the processor will stay in Stop-Grant state. A transition back to the Normal state will occur with the deassertion of the STPCLK# signal.

A transition to the HALT/Grant Snoop state will occur when the processor detects a snoop on the system bus (see Section 2.2.4). A transition to the Sleep state (see Section 2.2.5) will occur with the assertion of the SLP# signal.

While in Stop-Grant State, SMI#, INIT#, and LINT[1:0] will be latched by the processor, and only serviced when the processor returns to the Normal state. Only one occurrence of each event will be recognized and serviced upon return to the Normal state.

Downloaded from Arrow.com.

2.2.4 HALT/Grant Snoop State—State 4

The processor will respond to snoop transactions on the Pentium III processor system bus while in Stop-Grant state or in AutoHALT Power Down state. During a snoop transaction, the processor enters the HALT/Grant Snoop state. The processor will stay in this state until the snoop on the Pentium III processor system bus has been serviced (whether by the processor or another agent on the Pentium III processor system bus). After the snoop is serviced, the processor will return to the Stop-Grant state or AutoHALT Power Down state, as appropriate.

2.2.5 Sleep State—State 5

The Sleep state is a very low power state in which the processor maintains its context, maintains the phase-locked loop (PLL), and has stopped all internal clocks. The Sleep state can only be entered from the Stop-Grant state. Once in the Stop-Grant state, the SLP# pin can be asserted, causing the processor to enter the Sleep state. The SLP# pin is not recognized in the Normal or AutoHALT states.

Snoop events that occur while in Sleep State or during a transition into or out of Sleep state will cause unpredictable behavior.

In the Sleep state, the processor is incapable of responding to snoop transactions or latching interrupt signals. No transitions or assertions of signals (with the exception of SLP# or RESET#) are allowed on the system bus while the processor is in Sleep state. Any transition on an input signal before the processor has returned to Stop-Grant state will result in unpredictable behavior.

If RESET# is driven active while the processor is in the Sleep state, and held active as specified in the RESET# pin specification, then the processor will reset itself, ignoring the transition through Stop-Grant State. If RESET# is driven active while the processor is in the Sleep State, the SLP# and STPCLK# signals should be deasserted immediately after RESET# is asserted to ensure the processor correctly executes the Reset sequence.

While in the Sleep state, the processor is capable of entering its lowest power state, the Deep Sleep state, by stopping the BCLK input (see Section 2.2.6). Once in the Sleep or Deep Sleep states, the SLP# pin can be deasserted if another asynchronous system bus event occurs. The SLP# pin has a minimum assertion of one BCLK period.

2.2.6 Deep Sleep State—State 6

The Deep Sleep state is the lowest power state the processor can enter while maintaining context. The Deep Sleep state is entered by stopping the BCLK input (after the Sleep state was entered from the assertion of the SLP# pin). The processor is in Deep Sleep state immediately after BCLK is stopped. It is recommended that the BCLK input be held low during the Deep Sleep State. Stopping of the BCLK input lowers the overall current consumption to leakage levels.

To re-enter the Sleep state, the BCLK input must be restarted. A period of 1 ms (to allow for PLL stabilization) must occur before the processor can be considered to be in the Sleep state. Once in the Sleep state, the SLP# pin can be deasserted to re-enter the Stop-Grant state.

While in Deep Sleep state, the processor is incapable of responding to snoop transactions or latching interrupt signals. No transitions or assertions of signals are allowed on the system bus while the processor is in Deep Sleep state. Any transition on an input signal before the processor has returned to Stop-Grant state will result in unpredictable behavior.

Downloaded from Arrow.com.

2.2.7 Clock Control

The processor provides the clock signal to the L2 cache. During AutoHALT Power Down and Stop-Grant states, the processor will process a system bus snoop. The processor will not stop the clock to the L2 cache during AutoHALT Power Down or Stop-Grant states. Entrance into the Halt/Grant Snoop state will allow the L2 cache to be snooped, similar to the Normal state.

When the processor is in Sleep and Deep Sleep states, it will not respond to interrupts or snoop transactions. During the Sleep state, the clock to the L2 cache is not stopped. During the Deep Sleep state, the clock to the L2 cache is stopped. The clock to the L2 cache will be restarted only after the internal clocking mechanism for the processor is stable (i.e., the processor has re-entered Sleep state).

PICCLK should not be removed during the AutoHALT Power Down or Stop-Grant states. PICCLK can be removed during the Sleep or Deep Sleep states. When transitioning from the Deep Sleep state to the Sleep state, PICCLK must be restarted with BCLK.

2.3 Power and Ground Pins

For clean on-chip power distribution, Pentium III processors have 27 V_{CC} (power) and 30 V_{SS} (ground) inputs. The 27 V_{CC} pins are further divided to provide the different voltage levels to the components. $V_{CC_{CORE}}$ inputs for the processor core and some L2 cache components account for 19 of the V_{CC} pins, while 4 V_{TT} inputs (1.5 V) are used to provide an AGTL+ termination voltage to the processor and 3 $V_{CC_{L2}}/V_{CC_{3.3}}$ inputs (3.3 V) are either used for the off-chip L2 cache TagRAM and BSRAMs (CPUID=067xh) or for the voltage clamp logic (CPUID=068xh). One V_{CC_5} pin is provided for use by test equipment and tools. V_{CC_5}, $V_{CC_{L2}}/V_{CC_{3.3}}$, and $V_{CC_{CORE}}$ must remain electrically separated from each other. On the circuit board, all $V_{CC_{CORE}}$ pins must be connected to a voltage island and all $V_{CC_{L2}}/V_{CC_{3.3}}$ pins must be connected to a separate voltage island (an island is a portion of a power plane that has been divided, or an entire plane). Similarly, all V_{SS} pins must be connected to a system ground plane.

Note: The voltage clamp logic acts as a voltage translator between the processor's 1.5 V tolerant CMOS signals and the 2.5 V CMOS voltage on the motherboard. This logic is only available with Pentium III processors with CPUID=068xh.

2.4 Decoupling Guidelines

Due to the large number of transistors and high internal clock speeds, the processor is capable of generating large average current swings between low and full power states. This causes voltages on power planes to sag below their nominal values if bulk decoupling is not adequate. Care must be taken in the board design to ensure that the voltage provided to the processor remains within the specifications listed in Table 8. Failure to do so can result in timing violations or a reduced lifetime of the processor.

Downloaded from Arrow.com.

2.4.1 Processor VCC_{CORE} Decoupling

Regulator solutions need to provide bulk capacitance with a low Effective Series Resistance (ESR) and keep an interconnect resistance from the regulator (or VRM pins) to the SC242 connector of less than 0.3 mΩ. This can be accomplished by keeping a maximum distance of 1.0 inches between the regulator output and SC242 connector. The recommended VCC_{CORE} interconnect is a 2.0 inch wide by 1.0 inch long (maximum distance between the SC242 connector and the VRM connector) plane segment with a 1-ounce plating. Bulk decoupling for the large current swings when the part is powering on, or entering/exiting low power states, is provided on the voltage regulation module (VRM). If using Intel's enabled VRM solutions see developer.intel.com for the specification and a list of qualified vendors. The VCC_{CORE} input should be capable of delivering a recommended minimum $dIcc_{CORE}/dt$ (defined in Table 8) while maintaining the required tolerances (also defined in Table 8).

2.4.2 Processor System Bus AGTL+ Decoupling

The Pentium III processor contains high frequency decoupling capacitance on the processor substrate; bulk decoupling must be provided for by the system baseboard for proper AGTL+ bus operation. See AP-906, *100 MHz AGTL+ Layout Guidelines for the Intel® Pentium® III Processor and Intel® 440BX AGPset* (Document Number 245086) or the appropriate platform design guide, AP-907, *Pentium® III Processor Power Distribution Guidelines* (Document Number 245085), and the GTL+ buffer specification in the *Pentium® II Processor Developer's Manual* (Document Number 243502) for more information.

2.5 Processor System Bus Clock and Processor Clocking

The BCLK input directly controls the operating speed of the Pentium III processor system bus interface. All Pentium III processor system bus timing parameters are specified with respect to the rising edge of the BCLK input. See the *P6 Family of Processors Hardware Developer's Manual* (Document Number 244001) for further details.

2.6 Voltage Identification

There are five voltage identification pins on the SC242 connector. These pins can be used to support automatic selection of power supply voltages. These pins are not signals, but are either an open circuit or a short circuit to V_{SS} on the processor. The combination of opens and shorts defines the voltage required by the processor core. The VID pins are needed to cleanly support voltage specification variations on current and future Pentium III processors. VID[4:0] are defined in Table 3. A '1' in this table refers to an open pin and a '0' refers to a short to ground. The power supply must supply the voltage that is requested or disable itself.

To ensure a system is ready for current and future Pentium III processors, the range of values in **bold** in Table 3 should be supported. A smaller range will risk the ability of the system to migrate to a higher performance Pentium III processor and/or maintain compatibility with current Pentium III processors.

Downloaded from Arrow.com.

Table 3. Voltage Identification Definition

Processor Pins						Notes[1,2]
VID4	VID3	VID2	VID1	VID0	Vcc_{CORE}	
0	1	1	1	1	1.30	
0	1	1	1	0	1.35	
0	1	1	0	1	1.40	
0	1	1	0	0	1.45	
0	1	0	1	1	1.50	
0	1	0	1	0	1.55	
0	1	0	0	1	**1.60**	3
0	1	0	0	0	**1.65**	3
0	0	1	1	1	**1.70**	3
0	0	1	1	0	**1.75**	3
0	0	1	0	1	**1.80**	3
0	0	1	0	0	**1.85**	3
0	0	0	1	1	**1.90**	3
0	0	0	1	0	**1.95**	3
0	0	0	0	1	**2.00**	3
0	0	0	0	0	**2.05**	3
1	1	1	1	1	No Core	
1	1	1	1	0	2.1	
1	1	1	0	1	2.2	
1	1	1	0	0	2.3	
1	1	0	1	1	2.4	
1	1	0	1	0	2.5	
1	1	0	0	1	2.6	
1	1	0	0	0	2.7	
1	0	1	1	1	2.8	
1	0	1	1	0	2.9	
1	0	1	0	1	3.0	
1	0	1	0	0	3.1	
1	0	0	1	1	3.2	
1	0	0	1	0	3.3	
1	0	0	0	1	3.4	
1	0	0	0	0	3.5	

NOTES:
1. 0 = Processor pin connected to Vss.
2. 1 = Open on processor; may be pulled up to TTL V_{IH} on baseboard.
3. To ensure a system is ready for the Pentium III processor, the values in **BOLD** in Table 3 should be supported.

Note that the '11111' (all opens) ID can be used to detect the absence of a processor core in a given connector as long as the power supply used does not affect these lines. Detection logic and pull-ups should not affect VID inputs at the power source (see Section 7.0).

The VID pins should be pulled up to a TTL-compatible level with external resistors to the power source of the regulator only if required by the regulator or external logic monitoring the VID[4:0] signals. The power source chosen must be guaranteed to be stable whenever the supply to the

Downloaded from Arrow.com.

voltage regulator is stable. This will prevent the possibility of the processor supply going above the specified VCC_{CORE} in the event of a failure in the supply for the VID lines. In the case of a DC-to-DC converter, this can be accomplished by using the input voltage to the converter for the VID line pull-ups. A resistor of greater than or equal to 10 kΩ may be used to connect the VID signals to the converter input.

2.7 Processor System Bus Unused Pins

All RESERVED pins must remain unconnected. Connection of these pins to VCC_{CORE}, VCC_{L2}/ $VCC_{3.3}$, VSS, or to any other signal (including each other) can result in component malfunction or incompatibility with future Pentium III processors. See Section 5.5 for a pin listing of the processor and the location of each RESERVED pin.

All TESTHI pins must be connected to 2.5 V via 1 kΩ –10 kΩ pull-up resistor.

PICCLK must be driven with a valid clock input and the PICD[1:0] lines must be pulled-up to 2.5 V even when the APIC will not be used. A separate pull-up resistor must be provided for each APIC data line.

For reliable operation, always connect unused inputs or bidirectional signals to an appropriate signal level. Unused AGTL+ inputs should be left as no connects; AGTL+ termination is provided on the processor. Unused active low CMOS inputs should be connected through a resistor to 2.5 V. Unused active high inputs should be connected through a resistor to ground (VSS). Unused outputs can be left unconnected. A resistor must be used when tying bidirectional signals to power or ground. When tying any signal to power or ground, a resistor will also allow for system testability. For unused pins, it is suggested that ~10 kΩ resistors be used for pull-ups (except for PICD[1:0] discussed above), and ~1 kΩ resistors be used as pull-downs.

2.8 Processor System Bus Signal Groups

In order to simplify the following discussion, the Pentium III processor system bus signals have been combined into groups by buffer type. All Pentium III processor system bus outputs are open drain and require a high-level source provided externally by the termination or pull-up resistor. However, the Pentium III processor includes on-cartridge (CPUID=067xh) or on-die (CPUID=068xh) termination.

AGTL+ input signals have differential input buffers, which use V_{REF} as a reference signal. AGTL+ output signals require termination to 1.5 V. In this document, the term “AGTL+ Input” refers to the AGTL+ input group as well as the AGTL+ I/O group when receiving. Similarly, “AGTL+ Output” refers to the AGTL+ output group as well as the AGTL+ I/O group when driving.

EMI pins may be connected to baseboard ground and/or to chassis ground through zero ohm (0 Ω) resistors. The 0 Ω resistors should be placed in close proximity to the SC242 connector. The path to chassis ground should be short in length and have a low impedance.

The CMOS, Clock, APIC, and TAP inputs can each be driven from ground to 2.5 V. The CMOS, APIC, and TAP outputs are open drain and should be pulled high to 2.5 V. This ensures not only correct operation for current Pentium III processors, but compatibility with future Pentium III processors as well.

The groups and the signals contained within each group are shown in Table 4. Refer to Section 7.0 for a description of these signals.

Downloaded from Arrow.com.

Table 4. System Bus Signal Groups

Group Name	Signals
AGTL+ Input	BPRI#, BR1#, DEFER#, RESET#, RS[2:0]#, RSP#, TRDY#
AGTL+ Output	PRDY#
AGTL+ I/O	A[35:3]#, ADS#, AERR#, AP[1:0]#, BERR#, BINIT#, BNR#, BP[3:2]#, BPM[1:0]#, BR0#[1], D[63:0]#, DBSY#, DEP[7:0]#, DRDY#, HIT#, HITM#, LOCK#, REQ[4:0]#, RP#
CMOS Input[5]	A20M#, FLUSH#, IGNNE#, INIT#, LINT0/INTR, LINT1/NMI, PREQ#, PWRGOOD[2], SMI#, SLP#[3], STPCLK#
CMOS Output[5]	FERR#, IERR#, THERMTRIP#[4]
System Bus Clock	BCLK
APIC Clock	PICCLK
APIC I/O[5]	PICD[1:0]
TAP Input[5]	TCK, TDI, TMS, TRST#
TAP Output[5]	TDO
Power/Other[6]	VCC_{CORE}, VCC_{L2}/$VCC_{3.3}$, VCC_5, VID[4:0], V_{TT}, V_{SS}, SLOTOCC#, THERMDP, THERMDN, BSEL[1:0], EMI, TESTHI, Reserved

NOTES:
1. The BR0# pin is the only BREQ# signal that is bidirectional. The internal BREQ# signals are mapped onto BR# pins after the agent ID is determined. See Section 7.0 for more information.
2. See Section 7.0 for information on the PWRGOOD signal.
3. See Section 7.0 for information on the SLP# signal.
4. See Section 7.0 for information on the THERMTRIP# signal.
5. These signals are specified for 2.5 V operation.
6. VCC_{CORE} is the power supply for the processor core.
   VCC_{L2}/$VCC_{3.3}$ is described in Section 2.3.
   VID[4:0] is described in Section 2.6.
   V_{TT} is used to terminate the system bus and generate V_{REF} on the processor substrate.
   V_{SS} is system ground.
   TESTHI should be connected to 2.5 V with a 1 kΩ –10 kΩ resistor.
   VCC_5 is not connected to the Pentium III processor core. This supply is used for the test equipment and tools.
   SLOTOCC# is described in Section 7.0.
   BSEL[1:0] is described in Section 2.8.2 and Section 7.0.
   EMI pins are described in Section 7.0.
   THERMDP, THERMDN are described in Section 7.0.

2.8.1 Asynchronous vs. Synchronous for System Bus Signals

All AGTL+ signals are synchronous to BCLK. All of the CMOS, Clock, APIC, and TAP signals can be applied asynchronously to BCLK.

All APIC signals are synchronous to PICCLK. All TAP signals are synchronous to TCK.

Downloaded from Arrow.com.

2.8.2 System Bus Frequency Select Signal (BSEL0)

The BSEL[1:0] signals (BSEL0 is also known as 100/66#) are used to select the system bus frequency for the Pentium III processor(s). Table 5 defines the possible combinations of the signals and the frequency associated with each combination. The frequency is determined by the processor(s), and frequency synthesizer. All system bus agents must operate at the same core and system bus frequency in a 2-way MP Pentium III processor configuration. In a 2-way MP system design, the BSEL[1:0] signals must be connected to the BSEL[1:0] pins of both processors. The Pentium III processor operates at either a 100 MHz or 133 MHz system bus frequency, but not both. 66 MHz system bus operation is not supported.

For systems that support only a 100 MHz system bus clock, resistors on the processor cartridge will tie the BSEL1 signal to ground (as shown in Figure 4). This signal can either be left as a no connect or tied to ground as shown below. The BSEL0 should be pulled up to 3.3 V with a 220 Ω resistor, and provided as a frequency driver to the clock driver/synthesizer.

On baseboards which support operation at either 100 or 133 MHz, the BSEL[1:0] signals should be pulled up to 3.3 V with a 220 Ω resistor (as shown in Figure 5 and Figure 6) and BSEL1 is provided as a frequency selection signal to the clock driver/synthesizer. The BSEL0 signal can also be incorporated into system shutdown logic on the baseboard (thus forcing the system to shutdown as long as the BSEL0 signal is low). Figure 4 shows this routing example with a 100 MHz Pentium III processor. Figure 5 shows the same routing example with a 133 MHz Pentium III processor.

Table 5. Frequency Select Truth Table for BSEL[1:0]

BSEL1	BSEL0	Frequency
0	0	66 MHz (unsupported)
0	1	100 MHz
1	0	Reserved
1	1	133 MHz

Figure 4. BSEL[1:0] Example for a 100 MHz System Design (100 MHz Processor Installed)

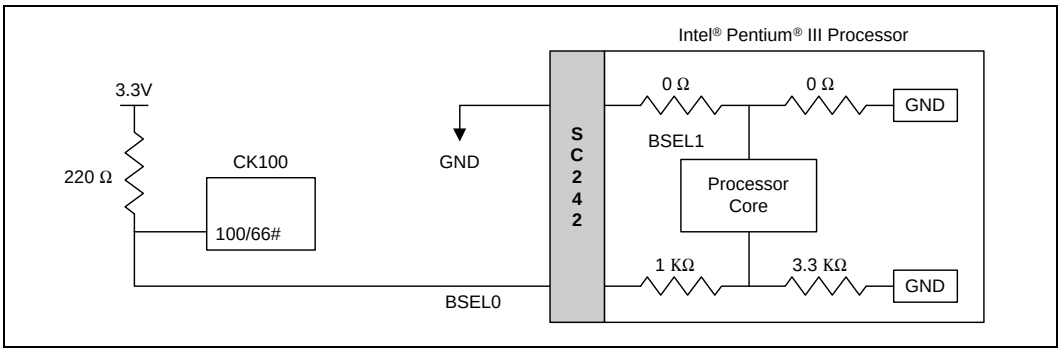

Downloaded from Arrow.com.

Figure 5. BSEL[1:0] Example for a 100/133 MHz Capable System (100 MHz Processor Installed)

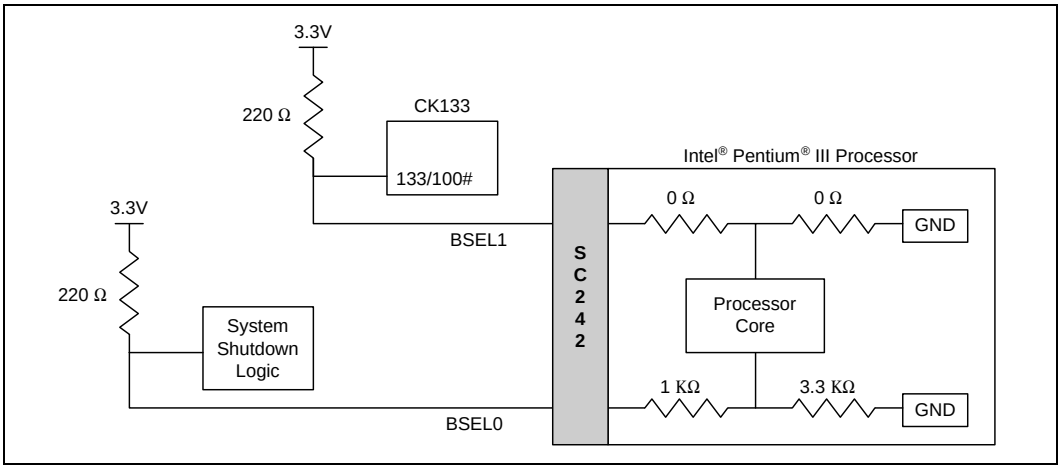

Figure 6. BSEL[1:0] Example for a 100/133 MHz Capable System (133 MHz Processor Installed)

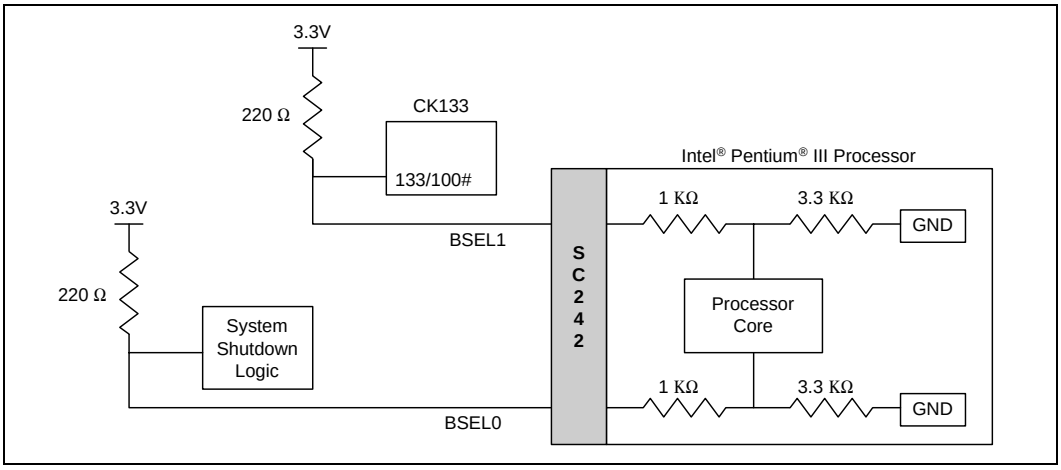

2.9 Test Access Port (TAP) Connection

Due to the voltage levels supported by other components in the Test Access Port (TAP) logic, it is recommended that the Pentium III processor be first in the TAP chain and followed by any other components within the system. A translation buffer should be used to connect to the rest of the chain unless one of the other components is capable of accepting a 2.5 V input. Similar considerations must be made for TCK, TMS, and TRST#. Two copies of each signal may be required with each driving a different voltage level.

The Debug Port should be placed at the start and end of the TAP chain with the TDI of the first component coming from the Debug Port and the TDO from the last component going to the Debug Port. In a 2-way MP system, be cautious when including an empty SC242 connector in the scan chain. All connectors in the scan chain must have a processor installed to complete the chain or the system must support a method to bypass the empty connectors; SC242 terminator substrates should not connect TDI to TDO in order to avoid placing the TDO pull-up resistors in parallel. See *SC242 Terminator Card Design Guidelines* (Document Number 243409) for more details.

Downloaded from Arrow.com.

2.10 Maximum Ratings

Table 6 contains Pentium III processor stress ratings only. Functional operation at the absolute maximum and minimum is not implied nor guaranteed. The processor should not receive a clock while subjected to these conditions. Functional operating conditions are given in the AC and DC tables in Section 2.11 and Section 2.13. Extended exposure to the maximum ratings may affect device reliability. Furthermore, although the processor contains protective circuitry to resist damage from static electric discharge, one should always take precautions to avoid high static voltages or electric fields.

Table 6. Absolute Maximum Ratings (CPUID=067xh)

Symbol	Parameter	Min	Max	Unit	Notes
$T_{STORAGE}$	Processor storage temperature	–40	85	°C	
$V_{CC(All)}$	Any processor supply voltage with respect to V_{SS}	–0.5	Operating voltage + 1.0	V	1, 2
Vin_{AGTL}	AGTL+ buffer DC input voltage with respect to V_{SS}	–0.3	$V_{CC_{CORE}}$ + 0.7	V	
Vin_{CMOS}	CMOS buffer DC input voltage with respect to V_{SS}	–0.3	3.3	V	3
I_{VID}	Max VID pin current		5	mA	
$I_{SLOTOCC}$	Max SLOTOCC# pin current		5	mA	
Mech Max Latch Arms	Mechanical integrity of latch arms		50	Cycles	4, 7
Mech Max Edge Fingers	Mechanical integrity of processor edge fingers		50	Insertions/ Extractions	5, 6

NOTES:
1. Operating voltage is the voltage to which the component is designed to operate. See Table 8.
2. This rating applies to the $V_{CC_{CORE}}$, $V_{CC_{L2}}$/$V_{CC_{3.3}}$, V_{CC_5}, and any input (except as noted below) to the processor.
3. Parameter applies to CMOS, APIC, and TAP bus signal groups only.
4. The mechanical integrity of the latch arms is specified to last a maximum of 50 cycles.
5. The electrical and mechanical integrity of the processor edge fingers are specified to last for 50 insertion/ extraction cycles.
6. While insertion/extraction cycling above 50 insertions will cause an increase in the contact resistance (above 0.1 Ω) and a degradation in the material integrity of the edge finger gold plating, it is possible to have processor functionality above the specified limit. The actual number of insertions before processor failure will vary based upon system configuration and environmental conditions.
7. This specification only applies to S.E.C.C. packaged processors.

Downloaded from Arrow.com.

Table 7. Absolute Maximum Ratings (CPUID=068xh)

Symbol	Parameter	Min	Max	Unit	Notes
$T_{STORAGE}$	Processor storage temperature	–40	85	°C	
VCC_{CORE} and V_{TT}	Processor core voltage and Termination supply voltage with respect to V_{SS}	-0.5	2.1	V	
$VCC_{L2}/VCC_{3.3}$	$VCC_{3.3}$ with respect to V_{SS}	–0.5	5.0	V	1
$Vin_{1.5}$	1.5 V buffer input voltage	V_{TT} – 2.3	V_{SS} + 2.3	V	2, 3, 5
$Vin_{2.5}$	2.5 V buffer input voltage	–0.7	3.3	V	4
I_{VID}	Max VID pin current		5	mA	
$I_{SLOTOCC}$	Max SLOTOCC# pin current		5	mA	
Mech Max Edge Fingers	Mechanical integrity of processor edge fingers		50	Insertions/ Extractions	6, 7

NOTES:
1. Operating voltage is the voltage to which the component is designed to operate. See Table 7.
2. Input voltage can never be above V_{SS} + 2.3 V.
3. Input voltage can never be below V_{TT} – 2.3 V.
4. Parameter applies to the 2.5 V processor core signals (BCLK, PICCLK, and PWRGOOD).
5. Parameter applies to the 1.5 V processor core signals (all signals except BCLK, PICCLK, and PWRGOOD).
6. The electrical and mechanical integrity of the processor edge fingers are specified to last for 50 insertion/ extraction cycles.
7. While insertion/extraction cycling above 50 insertions will cause an increase in the contact resistance (above 0.1 Ω) and a degradation in the material integrity of the edge finger gold plating, it is possible to have processor functionality above the specified limit. The actual number of insertions before processor failure will vary based upon system configuration and environmental conditions.

2.11 Processor DC Specifications

The processor DC specifications in this section are defined at the Pentium III processor core pins, edge fingers, and at the SC242 connector pins. See Section 7.0 for the processor edge finger signal definitions and Section 5.0 for the core pin locations and the signal listing.

Most of the signals on the Pentium III processor system bus are in the AGTL+ signal group. These signals are specified to be terminated to 1.5 V. The DC specifications for these signals are listed in Table 9.

To allow connection with other devices, the Clock, CMOS, APIC, and TAP signals are designed to interface at non-AGTL+ levels. The DC specifications for these pins are listed in Table 10.

Table 8 through Table 11 list the DC specifications for Pentium III processors. Specifications are valid only while meeting specifications for case temperature, clock frequency, and input voltages. Care should be taken to read all notes associated with each parameter.

Downloaded from Arrow.com.

Table 8. Voltage and Current Specifications (Sheet 1 of 4)

Symbol	Parameter	Processor		Min	Typ	Max	Unit	Notes[1]
		Core Freq	CPUID					
Vcc_{CORE}	Vcc for Processor Core	450 MHz	0672h		2.00		V	2,3,4,5
			0673h		2.00			2,3,4,5
		500 MHz	0672h		2.00			2,3,4,5
			0673h		2.00			2,3,4,5
		533 MHz	0672h		2.00			2,3,4,5
			0673h		2.00			2,3,4,5
		533EB MHz	0681h		1.65			2,3,4,5
			0683h		1.65			2,3,4,5
			0686h		1.70			2,3,4,5
		550 MHz	0672h		2.00			2,3,4,5
			0673h		2.00			2,3,4,5
		550E MHz	0681h		1.65			2,3,4,5
			0683h		1.65			2,3,4,5
			0686h		1.70			2,3,4,5
		600 MHz	0672h		2.05			2,3,4,5
			0673h		2.05			2,3,4,5
		600B MHz	0672h		2.05			2,3,4,5
			0673h		2.05			2,3,4,5
		600E MHz	0681h		1.65			2,3,4,5
			0683h		1.65			2,3,4,5
			0686h		1.70			2,3,4,5
		600EB MHz	0681h		1.65			2,3,4,5
			0683h		1.65			2,3,4,5
			0686h		1.70			2,3,4,5
		650 MHz	0681h		1.65			2,3,4,5
			0683h		1.65			2,3,4,5
			0686h		1.70			2,3,4,5
		667 MHz	0681h		1.65			2,3,4,5
			0683h		1.65			2,3,4,5
			0686h		1.70			2,3,4,5
		700 MHz	0681h		1.65			2,3,4,5
			0683h		1.65			2,3,4,5
			0686h		1.70			2,3,4,5
		733 MHz	0681h		1.65			2,3,4,5
			0683h		1.65			2,3,4,5
			0686h		1.70			2,3,4,5
		750 MHz	0681h		1.65			2,3,4,5
			0683h		1.65			2,3,4,5
			0686h		1.70			2,3,4,5
		800 MHz	0681h		1.65			2,3,4,5
			0683h		1.65			2,3,4,5
			0686h		1.70			2,3,4,5

Downloaded from Arrow.com.

Table 8. Voltage and Current Specifications (Sheet 2 of 4)

Symbol	Parameter	Processor		Min	Typ	Max	Unit	Notes[1]
		Core Freq	CPUID					
Vcc_{CORE}	Vcc for Processor Core	800EB MHz	0681h		1.65		V	2,3,4,5
			0683h		1.65			2,3,4,5
			0686h		1.70			2,3,4,5
		850 MHz	0681h		1.65			2,3,4,5
			0683h		1.65			2,3,4,5
			0686h		1.70			2,3,4,5
		866 MHz	0681h		1.65			2,3,4,5
			0683h		1.65			2,3,4,5
			0686h		1.70			2,3,4,5
		933 MHz	0683h		1.70			2,3,4,5
			0686h		1.70			2,3,4,5
		1.0 GHz	0683h		1.70			2,3,4,5
			0686h		1.70			2,3,4,5
		1.0B GHz	0683h		1.70			2,3,4,5
			0686h		1.70			2,3,4,5
Vcc_{L2}/ $Vcc_{3.3}$	Vcc for second level cache or voltage clamp logic			3.135	3.3	3.465	V	3.3 V ±5% [9]
V_{TT}	AGTL+ bus termination voltage			1.365	1.50	1.635	V	1.5 ±9% [6]
Baseboard Tolerance, Static	Processor core voltage static tolerance level at SC242 pins			–0.070 –0.080 –0.050 –0.055		0.070 0.040 0.040 0.040	V	2, 7, 18 2, 7, 19 2, 7, 21 2, 7
Baseboard Tolerance, Transient	Processor core voltage transient tolerance level at SC242 pins			–0.140 –0.080 –0.050 –0.055		0.140 0.050 0.050 0.050	V	2, 7, 18 2, 7, 19 2, 7, 21 2, 7
Vcc_{CORE} Tolerance, Static	Processor core voltage static tolerance level at edge fingers			–0.085 –0.110 –0.065 –0.075		0.085 0.040 0.040 0.040	V	2, 8, 18 2, 8, 19 2, 8, 21 2, 8
Vcc_{CORE} Tolerance, Transient	Processor core voltage transient tolerance level at edge fingers			–0.170 –0.110 –0.065 –0.075		0.170 0.080 0.080 0.080	V	2, 8, 18 2, 8, 19 2, 8, 21 2, 8

Downloaded from Arrow.com.

Table 8. Voltage and Current Specifications (Sheet 3 of 4)

Symbol	Parameter	Processor		Min	Typ	Max	Unit	Notes[1]
		Core Freq	CPUID					
ICC_{CORE}	ICC for processor core	450 MHz	ALL			14.5	A	2, 3, 10, 11
		500 MHz				16.1		2, 3, 10, 11
		533B MHz				16.7		2, 3, 10, 11
		533EB MHz				10.6		2, 3, 20
		550 MHz				17.0		2, 3, 10, 11
		550E MHz				11.0		2, 3, 20
		600 MHz				17.8		2, 3, 10, 11
		600B MHz				17.8		2, 3, 10, 11
		600E MHz				13.0		2, 3, 20
		600EB MHz				13.0		2, 3, 20
		650 MHz				13.0		2, 3, 20
		667 MHz				13.3		2, 3, 20
		700 MHz				14.0		2, 3, 20
		733 MHz				14.6		2, 3, 20
		750 MHz				15.0		2, 3, 20
		800 MHz				16.0		2, 3, 20
		800EB MHz				16.0		2, 3, 20
		850 MHz				16.2		2, 3, 20
		866 MHz				16.3		2, 3, 20
		933 MHz				17.7		2, 3, 20
		1.0 GHz				19.4		2, 3, 20, 21
		1.0B GHz				19.4		2, 3, 20, 21
ICC_{L2}	ICC for second level cache	450 MHz				1.08	A	2, 9, 10, 18
		500 MHz				1.21		2, 9, 10, 18
		533B MHz				1.29		2, 9, 10, 18
		550 MHz				1.33		2, 9, 10, 18
		600 MHz				1.45		2, 9, 10, 18
		600B MHz				1.45		2, 9, 10, 18
I_{VTT}	Termination voltage supply current	ALL				2.7	A	12
ISG_{nt}	ICC Stop-Grant for processor core	450 MHz	ALL			1.20	A	2, 10, 13
		500 MHz				1.40		2, 10, 13
		533B MHz				1.49		2, 10, 13
		533EB MHz				2.50		2, 10, 13
		550 MHz				1.54		2, 10, 13
		550E MHz				2.50		2, 10, 13
		600 MHz				1.68		2, 10, 13
		600B MHz				1.68		2, 10, 13
		600E MHz				2.50		2, 10, 13
		600EB MHz				2.50		2, 10, 13
		650 MHz				2.50		2, 10, 13
		667 MHz				2.50		2, 10, 13
		700 MHz				2.50		2, 10, 13
		733 MHz				2.50		2, 10, 13
		750 MHz				2.50		2, 10, 13
		800 MHz				2.50		2, 10, 13
		800EB MHz				2.50		2, 10, 13
		850 MHz				2.50		2, 10, 13
		866 MHz				2.50		2, 10, 13
		933 MHz				2.50		2, 10, 13
		1.0 GHz				2.50		2, 10, 13
		1.0B GHz				2.50		2, 10, 13
ISG_{ntL2}	ICC Stop-Grant for second level cache					0.1	A	2, 9, 10, 18

Downloaded from Arrow.com.

Table 8. Voltage and Current Specifications (Sheet 4 of 4)

Symbol	Parameter	Processor		Min	Typ	Max	Unit	Notes[1]
		Core Freq	CPUID					
I_{SLP}	I_{CC} Sleep for processor core	450 MHz 500 MHz 533B MHz 533EB MHz 550 MHz 550E MHz 600 MHz 600B MHz 600E MHz 600EB MHz 650 MHz 667 MHz 700 MHz 733 MHz 750 MHz 800 MHz 800EB MHz 850 MHz 866 MHz 933 MHz 1.0 GHz 1.0B GHz	ALL			0.80 0.90 1.00 2.50 1.00 2.50 1.00 1.00 2.50 2.50 2.50 2.50 2.50 2.50 2.50 2.50 2.50 2.50 2.50 2.50 2.50 2.50 2.50	A	2, 10 2, 10
I_{SLPL2}	I_{CC} Sleep for second level cache					0.1	A	2, 9, 10, 18
I_{DSLP}	I_{CC} Deep Sleep for processor core					0.50 2.20 3.00	A	2, 10, 18 2, 10, 19 2, 10
I_{DSLPL2}	I_{CC} Deep Sleep for second level cache					0.1	A	2, 9, 10, 18
$dI_{CC_{CORE}}/dt$	Power supply current slew rate					20	A/µs	2, 14, 15, 16
$dI_{CC_{L2}}/dt$	L2 cache power supply current slew rate					1	A/µs	14, 15, 16, 18
$dI_{CC_{VTT}}/dt$	Termination current slew rate					8	A/µs	14, 15, See Table 11
V_{CC_5}	5 V supply voltage			4.75	5.00	5.25	V	5 V ±5% [16, 17]
I_{CC_5}	I_{CC} for 5 V supply voltage				1.0		A	17

NOTES:

1. Unless otherwise noted, all specifications in this table apply to all processor frequencies.
2. This specification applies to Pentium III processors. For baseboard compatibility information on Pentium II processors, refer to the *Intel® Pentium® II Processor at 350, 400 and 450 MHz* datasheet (Document Number 243657).
3. $V_{CC_{CORE}}$ and $I_{CC_{CORE}}$ supply the processor core.
4. A variable voltage source should exist on all systems in the event that a different voltage is required. See Table 3 for more information.
5. Use the Typical Voltage specification with the Tolerance specifications to provide correct voltage regulation to the processor.
6. V_{TT} must be held to 1.5 V ±9%. It is recommended that V_{TT} be held to 1.5 V ±3% while the Pentium III processor system bus is idle. This is measured at the processor edge fingers across a 20 MHz bandwidth.
7. These are the tolerance requirements, across a 20 MHz bandwidth, at the SC242 connector pin on the bottom side of the baseboard. The requirements at the SC242 connector pins account for voltage drops (and impedance discontinuities) across the connector, processor edge fingers, and to the processor core. $V_{CC_{CORE}}$ must return to within the static voltage specification within 100 µs after a transient event; see the *VRM 8.4 DC-DC Converter Design Guidelines* (Document Number 245335) for further details.
8. These are the tolerance requirements, across a 20 MHz bandwidth, at the processor edge fingers. The requirements at the processor edge fingers account for voltage drops (and impedance discontinuities) at the processor edge fingers and to the processor core. $V_{CC_{CORE}}$ must return to within the static voltage specification within 100 µs after a transient event.

Downloaded from Arrow.com.

9. $VCC_{L2}/VCC_{3.3}$ and $I_{CCL2}/I_{CC3.3}$ supply the second level cache ("Discrete" cache type only). Unless otherwise noted, this specification applies to all Pentium III processor cache sizes. Systems should be designed for these specifications, even if a smaller cache size is used.
10. Max ICC measurements are measured at VCC max voltage, maximum temperature, under maximum signal loading conditions. The Max Icc currents specified do not occur simultaneously under the stress measurement condition.
11. Voltage regulators may be designed with a minimum equivalent internal resistance to ensure that the output voltage, at maximum current output, is no greater than the nominal (i.e., typical) voltage level of VCC_{CORE} (VCC_{CORE_TYP}). In this case, the maximum current level for the regulator, Icc_{CORE_REG}, can be reduced from the specified maximum current Icc_{CORE_MAX} and is calculated by the equation:

    $$Icc_{CORE_REG} = Icc_{CORE_MAX} \times VCC_{CORE_TYP} / (VCC_{CORE_TYP} + VCC_{CORE}\ \text{Tolerance, Transient})$$

12. The current specified is the current required for a single Pentium III processor. A similar amount of current is drawn through the termination resistors on the opposite end of the AGTL+ bus, unless single-ended termination is used (see Section 2.1).
13. The current specified is also for AutoHALT state.
14. Maximum values are specified by design/characterization at nominal VCC_{CORE} and nominal $VCC_{L2}/VCC_{3.3}$.
15. Based on simulation and averaged over the duration of any change in current. Use to compute the maximum inductance tolerable and reaction time of the voltage regulator. This parameter is not tested.
16. dI_{CC}/dt specifications are measured and specified at the SC242 connector pins.
17. VCC_5 and ICC_5 are not used by the Pentium III processors. The VCC_5 supply is used for the test equipment and tools.
18. This specification applies to the Pentium III processor with CPUID=067xh.
19. This specification applies to the Pentium III processor with CPUID=068xh.
20. Max I_{CC} measurements are measured at VCC nominal voltage, maximum temperature, under maximum signal loading conditions. The Max Icc currents specified do not occur simultaneously under the stress measurement condition.
21. .This specification applies to the Pentium III processor with CPUID=0683h operating at 1.0 GHz.

Downloaded from Arrow.com.

Table 9. AGTL+ Signal Groups DC Specifications

Symbol	Parameter	Min	Max	Unit	Notes[1, 4, 5]
V_{IL}	Input Low Voltage	–0.30 –0.15	0.82 V_{REF} – 0.20	V V	12 13
V_{IH}	Input High Voltage	1.22 V_{REF} + 0.20	V_{TT} V_{TT}	V	2, 3, 12 2, 3, 13
Ron	Buffer On Resistance		16.67	Ω	9
I_L	Leakage Current		±100 ±100	µA µA	6, 7, 8, 12 6, 10, 11, 13

NOTES:
1. Unless otherwise noted, all specifications in this table apply to Pentium III processor frequencies.
2. V_{IH} and V_{OH} for the Pentium III processor may experience excursions up to 200 mV above V_{TT} for a single system bus clock. However, input signal drivers must comply with the signal quality specifications in Section 3.0.
3. Minimum and maximum V_{TT} are given in Table 11.
4. Parameter correlated to measure into a 25 Ω resistor terminated to 1.5 V.
5. I_{OH} for the Pentium III processor may experience excursions of up to a 12 mA for a single bus clock.
6. Leakage current affects input, output, and I/O signals.
7. ($0 \le V_{IN} \le 2.0$ V +5%).
8. ($0 \le V_{OUT} \le 2.0$ V +5%).
9. Refer to the Pentium III I/O Buffer Models for I/V characteristics.
10. ($0 \le V_{IN} \le 1.5$ V +5%).
11. ($0 \le V_{OUT} \le 1.5$ V +5%).
12. This specification applies to the Pentium III processor with CPUID=067xh.
13. This specification applies to the Pentium III processor with CPUID=068xh.

Table 10. Non-AGTL+ Signal Group DC Specifications

Symbol	Parameter	Min	Max	Unit	Notes [1]
V_{IL}	Input Low Voltage	–0.30 –0.15 –0.30 –0.30 –0.15	0.5 0.7 0.5 0.7 0.7	V V V V V	3, 8 3, 9, 10 2, 9; BCLK only 2, 9; PICCLK only 2, 9; PWRGOOD only
V_{IH}	Input High Voltage	1.7 1.7 2.0	2.625 2.625 2.625	V V V	3, 8 3, 9, 10 2, 9; BCLK, PICCLK, and PWRGOOD only
V_{OL}	Output Low Voltage		0.5	V	3, 4
V_{OH}	Output High Voltage	N/A	2.625	V	All outputs are open-drain
I_{OL}	Output Low Current	14		mA	3, 11
I_L	Leakage Current		±100	µA	5, 6, 7

NOTES:
1. Unless otherwise noted, all specifications in this table apply to all Pentium III processor frequencies.
2. These values are specified at the processor core pins.
3. These values are specified at the processor edge fingers.
4. Parameter measured at 14 mA (for use with TTL inputs).
5. Leakage current affects input, output and I/O signals.
6. ($0 \le V_{IN} \le 2.5$ V +5%).
7. ($0 \le V_{OUT} \le 2.5$ V +5%).
8. This specification applies to the Pentium III processor with CPUID=067xh.
9. This specification applies to the Pentium III processor with CPUID=068xh.
10. Parameters apply to all non-AGTL+ signals except for BCLK, PICCLK, and PWRGOOD.
11. Specified as the minimum amount of current that the output buffer must be able to sink. However, VOL Max cannot be guaranteed if this specification is exceeded.

Downloaded from Arrow.com.

2.12 AGTL+ System Bus Specifications

It is recommended that the AGTL+ bus be routed in a daisy-chain fashion with termination resistors to V_{TT} at each end of the signal trace. These termination resistors are placed electrically between the ends of the signal traces and the V_{TT} voltage supply and generally are chosen to approximate the substrate impedance. The valid high and low levels are determined by the input buffers using a reference voltage called V_{REF}.

Table 11 lists the nominal specification for the AGTL+ termination voltage (V_{TT}). The AGTL+ reference voltage (V_{REF}) is generated on the processor substrate for the processor core, but should be set to 2/3 V_{TT} for other AGTL+ logic using a voltage divider on the baseboard. It is important that the baseboard impedance be specified and held to a ±15% tolerance, and that the intrinsic trace capacitance for the AGTL+ signal group traces is known and well-controlled. For more details on the GTL+ buffer specification, see the *Intel® Pentium® II Processor Developer's Manual* (Document Number 243502) and AP-585, *Intel® Pentium® II Processor GTL+ Guidelines* (Document Number 243330).

Table 11. AGTL+ Bus Specifications

Symbol	Parameter	Min	Typ	Max	Units	Notes[1, 2]
V_{TT}	Bus Termination Voltage	1.365	1.50	1.635	V	3
R_{TT}	Termination Resistor		56		Ω	4
V_{REF}	Bus Reference Voltage	0.95	2/3 V_{TT}	1.05	V	5

NOTES:
1. Unless otherwise noted, all specifications in this table apply to all Pentium III processor frequencies.
2. Pentium III processors contain AGTL+ termination resistors at the end of each signal trace on the processor substrate. Pentium III processors generate V_{REF} on the processor substrate by using a voltage divider on V_{TT} supplied through the SC 242 connector.
3. V_{TT} must be held to 1.5 V ±9%; $dI_{CC_{VTT}}/dt$ is specified in Table 8. It is recommended that V_{TT} be held to 1.5 V ±3% while the Pentium III processor system bus is idle. This is measured at the processor edge fingers.
4. R_{TT} must be held within a tolerance of ±5%
5. V_{REF} is generated on the processor substrate to be 2/3 V_{TT} ±2% nominally.

2.13 System Bus AC Specifications

The Pentium III processor system bus timings specified in this section are defined at the Pentium III processor core pads. Unless otherwise specified, timings are tested at the processor core during manufacturing. See Section 7.0 for the Pentium III processor edge connector signal definitions. See Section 5.6 for the Pentium III processor closest accessible core pad to substrate via assignment.

Table 12 through Table 18 list the AC specifications associated with the Pentium III processor system bus. These specifications are broken into the following categories: Table 12 through Table 13 contain the system bus clock core frequency and cache bus frequencies, Table 14 contains the AGTL+ specifications, Table 15 contains the CMOS signal group specifications, Table 16 contains timings for the Reset conditions, Table 17 covers APIC bus timing, and Table 18 covers TAP timing.

All Pentium II processor system bus AC specifications for the AGTL+ signal group are relative to the rising edge of the BCLK input. All AGTL+ timings are referenced to V_{REF} for both ‘0’ and ‘1’ logic levels unless otherwise specified.

Downloaded from Arrow.com.

The timings specified in this section should be used in conjunction with the I/O buffer models provided by Intel. These I/O buffer models, which include package information, are available for the Pentium III processor in Viewlogic XTK model format (formerly known as QUAD format) as the *Intel® Pentium® III Processor I/O Buffer Models* on Intel's Developer's Website (http://developer.intel.com.) AGTL+ layout guidelines are also available in AP-906, *100 MHz AGTL+ Layout Guidelines for the Intel® Pentium® III Processor and Intel® 440BX AGPset* (Document Number 245086) or the appropriate platform design guide.

Care should be taken to read all notes associated with a particular timing parameter.

Table 12. System Bus AC Specifications (Clock) at Processor Core Pins

T# Parameter	Min	Nom	Max	Unit	Figure	Notes[1, 2, 3]
System Bus Frequency			100.00 133.33	MHz MHz		4, 10 4, 11
T1: BCLK Period	10.0 7.5			ns ns	7 7	4, 5, 10 4, 5, 11
T2: BCLK Period Stability			±250	ps	7	7, 9
T3: BCLK High Time	2.5 1.4			ns ns	7 7	@>2.0 V, 10 @>2.0 V, 11
T4: BCLK Low Time	2.4 1.4			ns ns	7 7	@<0.5 V [6, 10] @<0.5 V [6, 11]
T5: BCLK Rise Time	0.4		1.60	ns	7	(0.5 V–2.0 V) [8, 10, 11]
T6: BCLK Fall Time	0.4		1.60	ns	7	(2.0 V–0.5 V) [8, 10, 11]

1. Unless otherwise noted, all specifications in this table apply to all Pentium III processor frequencies.
2. All AC timings for the AGTL+ signals are referenced to the BCLK rising edge at 1.25 V at the processor core pin. All AGTL+ signal timings (address bus, data bus, etc.) are referenced at 1.00 V at the processor core pins.
3. All AC timings for the CMOS signals are referenced to the BCLK rising edge at 1.25 V at the processor core pin. All CMOS signal timings (compatibility signals, etc.) are referenced at 1.25 V at the processor core pins.
4. The internal core clock frequency is derived from the Pentium III processor system bus clock. The system bus clock to core clock ratio is fixed for each processor. Individual processors will only operate at their specified system bus frequency, either 100 MHz or 133 MHz. Table 13 shows the supported ratios for each processor.
5. The BCLK period allows a +0.5 ns tolerance for clock driver variation.
6. Due to the difficulty of accurately measuring clock jitter in a system, it is recommended that a clock driver be used that is designed to meet the period stability specification into a test load of 10 to 20 pF. This should be measured on the **rising edges of adjacent BCLKs crossing 1.25 V at the processor core pin**. The jitter present must be accounted for as a component of BCLK timing skew between devices.
7. The clock driver's closed loop jitter bandwidth must be set low to allow any PLL-based device to track the jitter created by the clock driver. The –20 dB attenuation point, as measured into a 10 to 20 pF load, should be less than 500 kHz. This specification may be ensured by design characterization and/or measured with a spectrum analyzer.
8. Not 100% tested. Specified by design characterization as a clock driver requirement.
9. The average period over a 1uS period of time must be greater than the minimum specified period.
10. This specification applies to the Pentium III processor with a system bus frequency of 100 MHz.
11. This specification applies to the Pentium III processor with a system bus frequency of 133 MHz.

Downloaded from Arrow.com.

Table 13. Valid System Bus, Core Frequency, and Cache Bus Frequencies

Processor	Core Frequency (MHz)	BCLK Frequency (MHz)	Frequency Multiplier	L2 Cache (MHz)	Notes[1]
450	450	100	9/2	225	
500	500	100	5	250	
533B	533	133	4	267	
533EB	533	133	4	533	
550	550	100	11/2	275	
550E	550	100	11/2	550	
600	600	100	6	300	
600B	600	133	9/2	300	
600E	600	100	6	600	
600EB	600	133	9/2	600	
650	650	100	13/2	650	
667	666.67	133	5	666.67	
700	700	100	7	700	
733	733	133	11/2	733	
750	750	100	15/2	750	
800	800	100	8	800	
800EB	800	133	6	800	
850	850	100	17/2	850	
866	866	133	13/2	866	
933	933	133	7	933	
1.0 GHz	1000.0	100	10	1000.0	
1.0B GHz	1000.0	133	15/2	1000.0	

NOTE:
1. Contact your local Intel representative for the latest information on processor frequencies and/or frequency multipliers.

Downloaded from Arrow.com.

Table 14. System Bus AC Specifications (AGTL+ Signal Group) at the Processor Core Pins

T# Parameter	Min	Max	Unit	Figure	Notes[1, 2, 3]
T7: AGTL+ Output Valid Delay	-0.20 -0.14 -0.10	3.15 2.20 2.70	ns ns ns	8 8 8	4, 10, 13 5, 11, 13 5, 11, 12, 14
T8: AGTL+ Input Setup Time	1.90 1.20 1.20		ns ns ns	9 9 9	6, 7, 8, 11, 13 6, 7, 8, 12, 13 6, 7, 8, 11, 12, 14
T9: AGTL+ Input Hold Time	0.85 0.58 0.80		ns ns ns	9 9 9	9, 11, 13 9, 12, 13 9, 11, 12, 14
T10: RESET# Pulse Width	1.00		ms	11	7, 10

NOTES:
1. Unless otherwise noted, all specifications in this table apply to all Pentium III processor frequencies.
2. These specifications are tested during manufacturing.
3. All AC timings for the AGTL+ signals are referenced to the BCLK rising edge at 1.25 V at the processor core pin. All AGTL+ signal timings (compatibility signals, etc.) are referenced at 1.00 V at the processor core pins.
4. Valid delay timings for these signals are specified into 25 Ω to 1.5 V and with V_{REF} at 1.0 V.
5. Valid delay timings for these signals are specified into 50 Ω to 1.5 V and with V_{REF} at 1.0 V.
6. A minimum of 3 clocks must be guaranteed between two active-to-inactive transitions of TRDY#.
7. RESET# can be asserted (active) asynchronously, but must be deasserted synchronously. For 2-way MP systems, RESET# should be synchronous.
8. Specification is for a minimum 0.40 V swing.
9. Specification is for a maximum 1.0 V swing.
10. This should be measured after VCC_{CORE}, VCC_{L2}/$VCC_{3.3}$, and BCLK become stable.
11. This specification applies to the Pentium III processor with a system bus frequency of 100 MHz.
12. This specification applies to the Pentium III processor with a system bus frequency of 133 MHz.
13. This specification applies to the Pentium III processor with CPUID=067xh.
14. This specification applies to the Pentium III processor with CPUID=068xh.

Table 15. System Bus AC Specifications (CMOS Signal Group) at the Processor Core Pins

T# Parameter	Min	Max	Unit	Figure	Notes[1, 2, 3, 4]
T14: CMOS Input Pulse Width, except PWRGOOD	2		BCLKs	8	Active and Inactive states
T15: PWRGOOD Inactive Pulse Width	10		BCLKs	8, 11	5

NOTES:
1. Unless otherwise noted, all specifications in this table apply to all Pentium III processor frequencies.
2. These specifications are tested during manufacturing.
3. All AC timings for the CMOS signals are referenced to the BCLK rising edge at 0.7 V at the processor core pins. All CMOS signal timings (compatibility signals, etc.) are referenced at 1.25 V.
4. These signals may be driven asynchronously.
5. When driven inactive or after VCC_{CORE}, VCC_{L2}/$VCC_{3.3}$, and BCLK become stable.

Table 16. System Bus AC Specifications (Reset Conditions)

T# Parameter	Min	Max	Unit	Figure	Notes[1]
T16: Reset Configuration Signals (A[14:5]#, BR0#, FLUSH#, INIT#) Setup Time	4		BCLKs	10	Before deassertion of RESET#
T17: Reset Configuration Signals (A[14:5]#, BR0#, FLUSH#, INIT#) Hold Time	2	20	BCLKs	10	After clock that deasserts RESET#

NOTES:
1. Unless otherwise noted, all specifications in this table apply to all Pentium III processor frequencies.

Downloaded from Arrow.com.

Table 17. System Bus AC Specifications (APIC Clock and APIC I/O) at the Processor Core Pins

T# Parameter	Min	Max	Unit	Figure	Notes[1, 2, 3]
T21: PICCLK Frequency	2.0	33.3	MHz		
T22: PICCLK Period	30.0	500.0	ns	7	
T23: PICCLK High Time	12.0		ns	7	
T24: PICCLK Low Time	12.0		ns	7	
T25: PICCLK Rise Time	0.25	3.0	ns	7	
T26: PICCLK Fall Time	0.25	3.0	ns	7	
T27: PICD[1:0] Setup Time	8.0 5.0		ns ns	9 9	4, 7 4, 8
T28: PICD[1:0] Hold Time	2.5		ns	9	4
T29: PICD[1:0] Valid Delay	1.5	10	ns	8	4, 5, 6, 7
T29a: PICD[1:0] Valid Delay (Rising Edge)	1.5	8.7	ns	8	4, 5, 6, 8
T29b: PICD[1:0] Valid Delay (Falling Edge)	1.5	12.0	ns	8	4, 5, 6, 8

NOTES:
1. Unless otherwise noted, all specifications in this table apply to all Pentium III processor frequencies.
2. These specifications are tested during manufacturing.
3. All AC timings for the APIC I/O signals are referenced to the PICCLK rising edge at 1.25 V at the processor core pins. All APIC I/O signal timings are referenced at 1.25 V (CPUID=067xh) or 0.75 V (CPUID=068xh) at the processor core pins.
4. Referenced to PICCLK rising edge.
5. For open drain signals, valid delay is synonymous with float delay.
6. Valid delay timings for these signals are specified into a 150 Ω load pulled up to 2.5 V +5%.
7. This specification applies to the Pentium III processor with CPUID=067xh.
8. This specification applies to the Pentium III processor with CPUID=068xh.

Table 18. System Bus AC Specifications (TAP Connection) at the Processor Core Pins

T# Parameter	Min	Max	Unit	Figure	Notes[1, 2, 3]
T30: TCK Frequency		16.667	MHz		
T31: TCK Period	60.0		ns	7	
T32: TCK High Time	25.0 25.0		ns ns	7 7	@1.7 V [10, 11] @V_{REF} + 0.20 V [10, 12]
T33: TCK Low Time	25.0 25.0		ns ns	7 7	@0.7 V [10, 11] @V_{REF} – 0.20 V [10, 12]
T34: TCK Rise Time		5.0 5.0	ns ns	7 7	(0.7 V–1.7 V) [4, 10, 11] (V_{REF} – 0.20 V) – (V_{REF} + 0.20 V) [10, 12]
T35: TCK Fall Time		5.0 5.0	ns ns	7 7	(1.7 V–0.7 V) [4, 10] (V_{REF} + 0.20 V) – (V_{REF} – 0.20 V) [10, 12]
T36: TRST# Pulse Width	40.0		ns	13	Asynchronous [10]
T37: TDI, TMS Setup Time	5.0		ns	12	5
T38: TDI, TMS Hold Time	14.0		ns	12	5
T39: TDO Valid Delay	1.0	10.0	ns	12	6, 7
T40: TDO Float Delay		25.0	ns	12	6, 7, 10
T41: All Non-Test Outputs Valid Delay	2.0	25.0	ns	12	6, 8, 9
T42: All Non-Test Inputs Setup Time		25.0	ns	12	6, 8, 9, 10

Downloaded from Arrow.com.

Table 18. System Bus AC Specifications (TAP Connection) at the Processor Core Pins

T# Parameter	Min	Max	Unit	Figure	Notes[1, 2, 3]
T43: All Non-Test Inputs Setup Time	5.0		ns	12	5, 8, 9
T44: All Non-Test Inputs Hold Time	13.0		ns	12	5, 8, 9

NOTES:
1. Unless otherwise noted, all specifications in this table apply to all Pentium III processor frequencies.
2. All AC timings for the TAP signals are referenced to the TCK rising edge at 1.25 V (CPUID=067xh) or 0.75 V (CPUID=068xh) at the processor core pins. All TAP signal timings (TMS, TDI, etc.) are referenced at 1.25 V (CPUID=067xh) or 0.75 V (CPUID=068xh) at the processor core pins.
3. These specifications are tested during manufacturing, unless otherwise noted.
4. 1 ns can be added to the maximum TCK rise and fall times for every 1 MHz below 16.667 MHz.
5. Referenced to TCK rising edge.
6. Referenced to TCK falling edge.
7. Valid delay timing for this signal is specified to 2.5 V +5%.
8. Non-Test Outputs and Inputs are the normal output or input signals (besides TCK, TRST#, TDI, TDO, and TMS). These timings correspond to the response of these signals due to TAP operations.
9. During Debug Port operation, use the normal specified timings rather than the TAP signal timings.
10. Not 100% tested. Specified by design characterization.
11. This specification applies to the Pentium III processor with CPUID=067xh.
12. This specification applies to the Pentium III processor with CPUID=068xh.

Note: For Figure 7 through Figure 13, the following apply:

1. Figure 7 through Figure 13 are to be used in conjunction with Table 12 through Table 18.
2. All AC timings for the AGTL+ signals at the processor core pins are referenced to the BCLK rising edge at 1.25 V. All AGTL+ signal timings (address bus, data bus, etc.) are referenced at 1.00 V at the processor core pins.

Figure 7. BCLK, PICCLK, and TCK Generic Clock Waveform

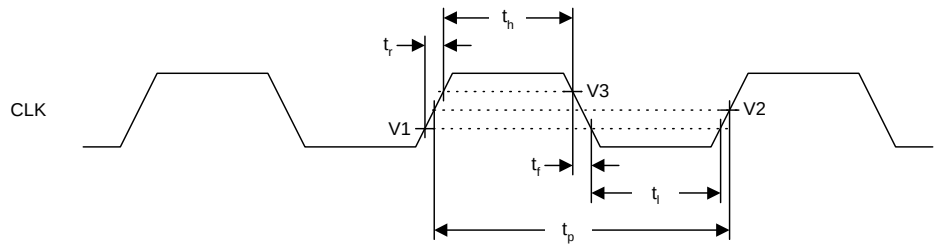

T_r = T5, T25, T34, (Rise Time)
T_f = T6, T26, T35, (Fall Time)
T_h = T3, T23, T32, (High Time)
T_l = T4, T24, T33, (Low Time)
T_p = T1, T22, T31 (BCLK, TCK, PICCLK Period)
V1 = BCLK = 0.5V, PICCLK = 0.7V, and TCK = 0.7V (CPUID 067xh) or V_{REF} - 0.20V (CPUID 068xh)
V2 = BCLK = 1.25V, PICCLK = 1.25V and TCK = 1.25V (CPUID 067xh) or 0.75V (CPUID 068xh)
V3 = BCLK = 2.0V, PICCLK = 1.7V (CPUID 067xh) or 2.0V (CPUID 068xh),
TCK = 1.7V (CPUID 067xh) or V_{REF} - 0.20V (CPUID 068xh)

Downloaded from Arrow.com.

Figure 8. System Bus Valid Delay Timings

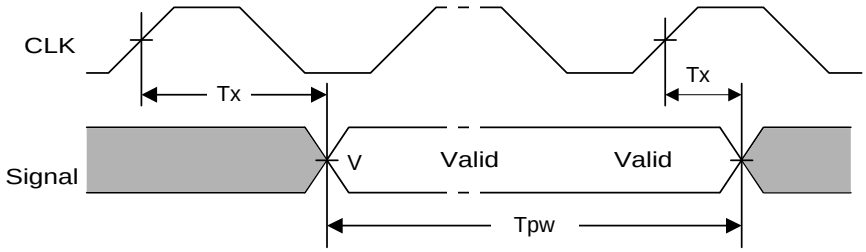

Tx = T7, T29, T29a, T29b (Valid Delay)
Tpw = T14, T15 (Pulse Width)
V = 1.0V for AGTL+ signal group; 1.25V (CPUID 067xh) or 0.75V (CPUID 068xh) for APIC and TAP signal groups

Figure 9. System Bus Setup and Hold Timings

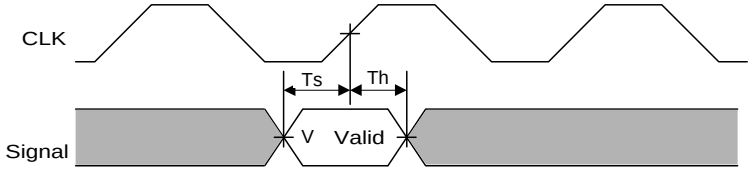

Ts = T8, T27 (Setup Time)
Th = T9, T28 (Hold Time)
V = 1.0V for AGTL+ signal group; 1.25V (CPUID 067xh) or 0.75V (CPUID 068xh) for APIC and TAP signal groups

Figure 10. System Bus Reset and Configuration Timings

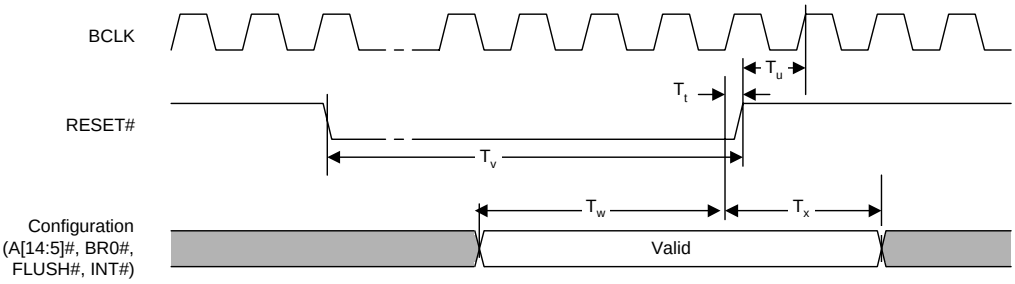

T_t = T9 (AGTL+ Input Hold Time)
T_u = T8 (AGTL+ Input Setup Time)
T_v = T10 (RESET# Pulse Width)
T_w = T16 (Reset Configuration Signals (A[14:5]#, BR0#, FLUSH#, INIT#) Setup Time)
T_x = T17 (Reset Configuration Signals (A[14:5]#, BR0#, FLUSH#, INIT#) Hold Time)

Downloaded from Arrow.com.

Figure 11. Power-On Reset and Configuration Timings

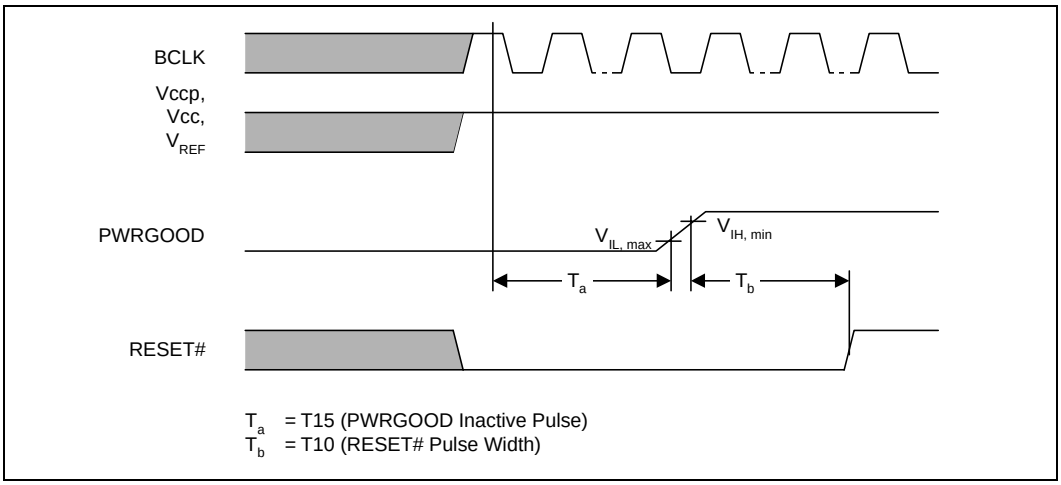

T_a = T15 (PWRGOOD Inactive Pulse)
T_b = T10 (RESET# Pulse Width)

Figure 12. Test Timings (TAP Connection)

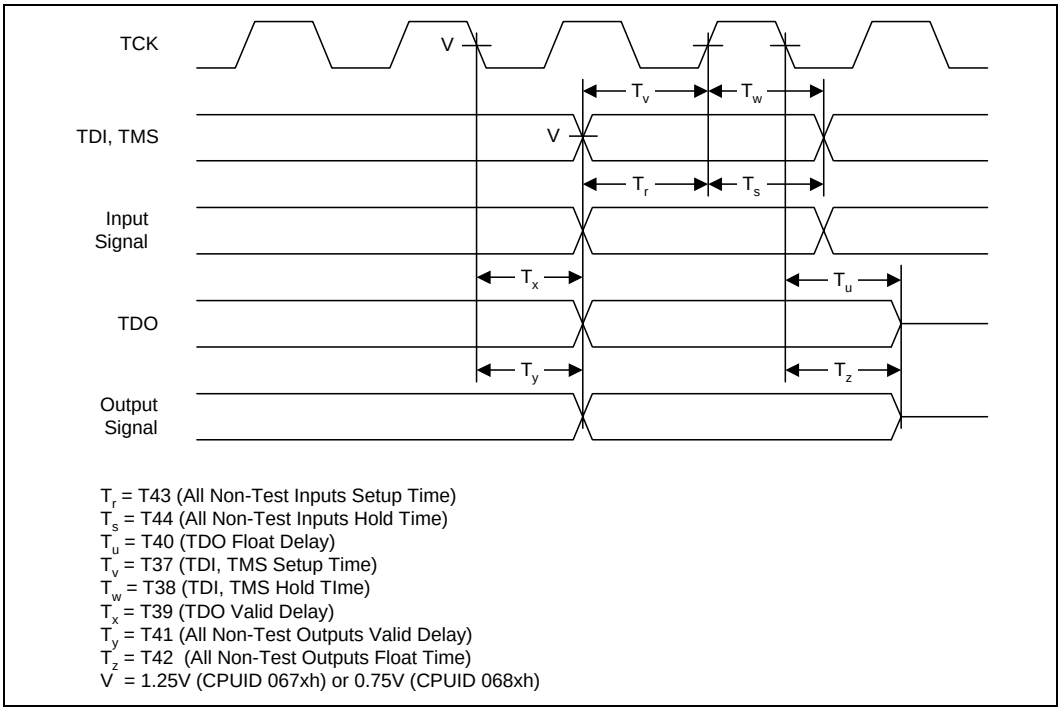

T_r = T43 (All Non-Test Inputs Setup Time)
T_s = T44 (All Non-Test Inputs Hold Time)
T_u = T40 (TDO Float Delay)
T_v = T37 (TDI, TMS Setup Time)
T_w = T38 (TDI, TMS Hold TIme)
T_x = T39 (TDO Valid Delay)
T_y = T41 (All Non-Test Outputs Valid Delay)
T_z = T42 (All Non-Test Outputs Float Time)
V = 1.25V (CPUID 067xh) or 0.75V (CPUID 068xh)

Figure 13. Test Reset Timings

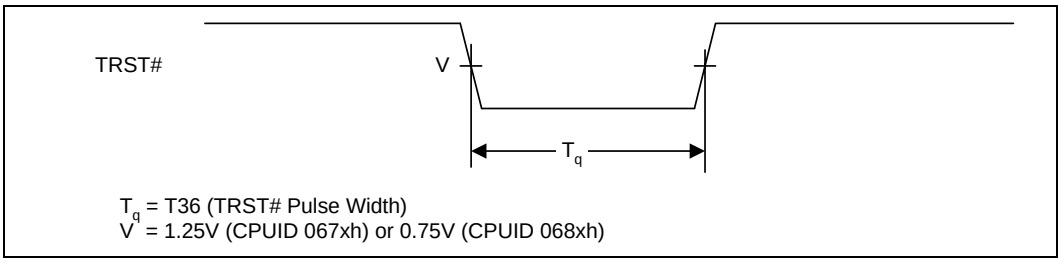

T_q = T36 (TRST# Pulse Width)
V = 1.25V (CPUID 067xh) or 0.75V (CPUID 068xh)

Downloaded from Arrow.com.

3.0 Signal Quality Specifications

Signals driven on the Pentium III processor system bus should meet signal quality specifications to ensure that the components read data properly and to ensure that incoming signals do not affect the long term reliability of the component. Specifications are provided for simulation and measurement at the processor core; they should not be tested at the edge fingers.

The AGTL+ and non-AGTL+ signal quality specifications listed in this section apply to Pentium III processors with CPUID=068xh. It is recommended that these specifications be used with Pentium III processors with CPUID=067xh, however any deviations from these guidelines must be verified with the specifications listed in the *Intel® Pentium® II Processor Developer's Manual* (Document Number 243502).

3.1 BCLK, PICCLK, and PWRGOOD Signal Quality Specifications and Measurement Guidelines

Table 19 describes the signal quality specifications at the processor core for the Pentium III processor system bus clock (BCLK), APIC clock (PICCLK), and PWRGOOD signals. Figure 14 describes the signal quality waveform for the system bus clock at the processor core pins.

Table 19. BCLK, PICCLK, and PWRGOOD Signal Quality Specifications at the Processor Core

V# Parameter	Min	Nom	Max	Unit	Figure	Notes[1]
V1: V_{IN} Absolute Voltage Range	–0.7		3.3	V	14	
V2: Rising Edge Ringback	2.0			V	14	2
V3: Falling Edge Ringback			0.5 0.7	V V	14 14	2 3

NOTES:
1. Unless otherwise noted, all specifications in this table apply to all Pentium III processor frequencies.
2. The rising and falling edge ringback voltage specified is the minimum (rising) or maximum (falling) absolute voltage the BCLK signal can dip back to after passing the V_{IH} (rising) or V_{IL} (falling) voltage limits. This specification is an absolute value.
3. The rising and falling edge ringback voltage specified is the minimum (rising) or maximum (falling) absolute voltage the PICCLK signal can dip back to after passing the V_{IH} (rising) or V_{IL} (falling) voltage limits. This specification is an absolute value.

Figure 14. BCLK and PICCLK Generic Clock Waveform

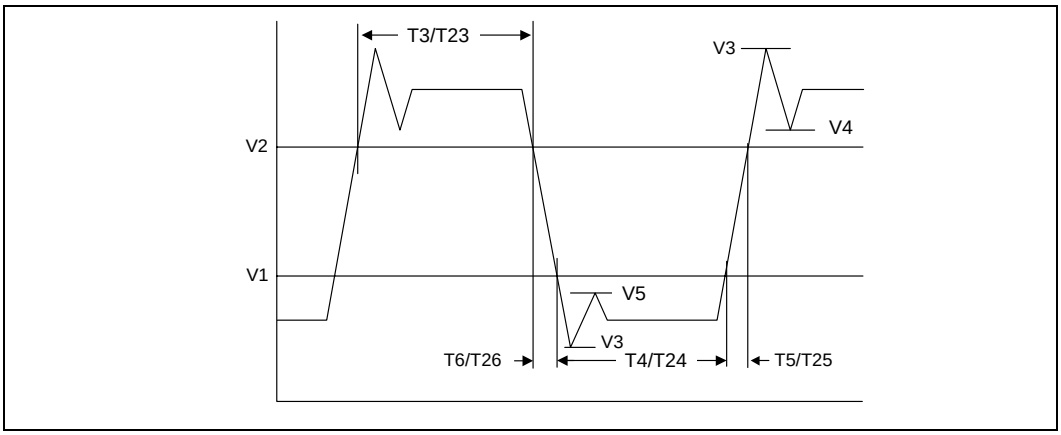

Downloaded from Arrow.com.

3.2 AGTL+ and Non-AGTL+ Overshoot/Undershoot Specifications and Measurement Guidelines

Overshoot/Undershoot is the absolute value of the maximum voltage differential across the input buffer relative termination voltage (V_{TT}). The overshoot/undershoot guideline limits transitions beyond V_{TT} or V_{SS} due to the fast signal edge rates. The processor can be damaged by repeated overshoot/undershoot events on 1.5 V or 2.5 V tolerant buffers if the charge is large enough (i.e., if the overshoot/undershoot is great enough). Determining the impact of an overshoot/undershoot condition requires knowledge of the Magnitude, the Pulse Duration, and the Activity Factor.

When performing simulations to determine impact of overshoot/undershoot, ESD diodes must be properly characterized. ESD protection diodes do not act as voltage clamps and will not provide overshoot/undershoot protection. ESD diodes modeled within the Intel provided *Intel® Pentium® III Processor I/O Buffer Models* do not clamp overshoot/undershoot and will yield correct simulation results. If other I/O buffer models are being used to characterize Pentium III processor performance, care must be taken to ensure that ESD models do not clamp extreme voltage levels. The Intel-provided *Pentium® III Processor I/O Buffer Models* also contains I/O capacitance characterization. Therefore, removing the ESD diodes from the I/O buffer model will impact results and may yield excessive overshoot/undershoot.

3.2.1 Overshoot/Undershoot Magnitude

Overshoot/Undershoot Magnitude describes the maximum potential difference between a signal and its voltage reference level, V_{SS} (overshoot) and V_{TT} (undershoot). While overshoot can be measured relative to V_{SS} using one probe (probe to signal - GND lead to V_{SS}), undershoot must be measured relative to V_{TT}. This could be accomplished by simultaneously measuring the V_{TT} plane while measuring the signal undershoot. The true waveform can then be calculated by the oscilloscope itself or by the following oscilloscope date file analysis:

$$\text{Converted Undershoot Waveform} = V_{TT} - \text{Signal_measured}$$

Note: The Converted Undershoot Waveform appears as a positive (overshoot) signal.

Note: Overshoot (rising edge) and undershoot (falling edge) conditions are separate and their impact must be determined independently.

After the conversion, the Undershoot/Overshoot Specifications (Table 20 through Table 22) can be applied to the Converted Undershoot Waveform using the same Magnitude and Pulse Duration Specifications (Table 20 through Table 22) as with an overshoot waveform.

Overshoot/undershoot magnitude levels must observe the Absolute Maximum Specifications (Table 20 through Table 22). These specifications must not be violated at any time regardless of bus activity or system state. Within these specifications are threshold levels that define different allowed Pulse Durations. Provided that the magnitude of the overshoot/undershoot is within the Absolute Maximum Specifications, the impact of the Overshoot/Undershoot Magnitude may be determined based upon the Pulse Duration and Activity Factor.

Downloaded from Arrow.com.

3.2.2 Overshoot/Undershoot Pulse Duration

Overshoot/Undershoot Pulse duration describes the total time an overshoot/undershoot event exceeds the Overshoot/Undershoot Reference Voltage (V_{OS_REF} = 1.635 V). The total time could encompass several oscillations above the Reference Voltage. Multiple overshoot/undershoot pulses within a single overshoot/undershoot event may need to be measured to determine the total Pulse Duration.

Note: Oscillations below the Reference Voltage can not be subtracted from the total Overshoot/ Undershoot Pulse Duration.

Note: Multiple Overshoot/Undershoot events occurring within the same clock cycle must be considered together as one event. Using the worst case Overshoot/Undershoot Magnitude, sum together the individual Pulse Durations to determine the total Overshoot/Undershoot Pulse Duration for that total event.

3.2.3 Overshoot/Undershoot Activity Factor

Activity Factor (AF) describes the frequency of overshoot (or undershoot) occurrence relative to a clock. Since the highest frequency of assertion of an AGTL+ or a CMOS signal is every other clock, an AF = 1 indicates that the specific overshoot (or undershoot) waveform occurs EVERY OTHER clock cycle. Thus, an AF = 0.01 indicates that the specific overshoot (or undershoot) waveform occurs one time in every 200 clock cycles.

The Overshoot/Undershoot Specifications (Table 20 through Table 22) show the Maximum Pulse Duration allowed for a given Overshoot/Undershoot Magnitude at a specific Activity Factor. Each table entry is independent of all others, meaning that the Pulse Duration reflects the existence of overshoot/undershoot events of that Magnitude ONLY. A platform with an overshoot/undershoot that just meets the Pulse Duration for a specific Magnitude where the AF < 1, means that there can be NO other overshoot/undershoot events, even of lesser Magnitude (note that if AF = 1, then the event occurs at all times and no other events can occur).

Note: Overshoot (rising edge) and undershoot (falling edge) conditions are separate and their impact must be determined independently.

Note: Activity factor for AGTL+ signals is referenced to BCLK frequency.

Note: Activity factor for CMOS signals is referenced to PICCLK frequency.

Downloaded from Arrow.com.

3.2.4 Reading Overshoot/Undershoot Specification Tables

The overshoot/undershoot specification for the Pentium III processor is not a simple single value. Instead, many factors are needed to determine what the over/undershoot specification is. In addition to the magnitude of the overshoot, the following parameters must also be known: the width of the overshoot (as measured above 1.635 V) and the Activity Factor (AF). To determine the allowed overshoot for a particular overshoot event, you must do the following:

1. Determine the signal group that particular signal falls into. If the signal is an AGTL+ signal operating with a 100 MHz system bus, use Table 20. If the signal is an AGTL+ signal operating with a 133 MHz system bus, use Table 21. If the signal is a CMOS signal, use Table 22.
2. Determine the Magnitude of the overshoot (relative to V_{SS}).
3. Determine the Activity Factor (how often does this overshoot occur?).
4. From the appropriate Specification table, read off the Maximum Pulse Duration (in ns) allowed.
5. Compare the specified Maximum Pulse Duration to the signal being measured. If the Pulse Duration measured is less than the Pulse Duration shown in the table, then the signal meets the specifications.

The above procedure is similar for undershoots after the undershoot waveform has been converted to look like an overshoot. Undershoot events must be analyzed separately from Overshoot events as they are mutually exclusive.

Below is an example showing how the maximum pulse duration is determined for a given waveform and how it relates to a measured value:

Platform Information:

- Signal Group = 133 MHz AGTL+
- Overshoot Magnitude (measured) = 2.3 V
- Pulse Duration (measured) = 1.6 ns
- Activity Factor (measured) = 0.1

Corresponding Maximum Pulse Duration Specification = 1.9 ns

Given the above parameters and using Table 21 (AF = 0.1 column), the maximum allowed pulse duration is 1.9 ns. Since the measured pulse duration is 1.6 ns, this particular overshoot event passes the overshoot specifications, although this doesn't guarantee that the combined overshoot/ undershoot events meet the specifications.

Downloaded from Arrow.com.

3.2.5 Determining If a System Meets the Overshoot/Undershoot Specifications

The overshoot/undershoot specifications (Table 20 through Table 22) specify the allowable overshoot/undershoot for a single overshoot/undershoot event. However, most systems will have multiple overshoot and/or undershoot events that each have their own set of parameters (magnitude, duration, and AF). While each overshoot on its own may meet the overshoot specification, when you add the total impact of all overshoot events, the system may exceed the specifications. A guideline to ensure a system passes the overshoot and undershoot specifications is shown below.

1. Ensure no signal (AGTL+ or 1.5 V non-AGTL+) ever exceeds the 1.635 V

   OR

2. If only one overshoot/undershoot event magnitude occurs, ensure it meets the over/undershoot specifications in the following tables. This means that whenever the over/undershoot event occurs, it always over/undershoots to the same level.

   OR

3. If multiple overshoots and/or multiple undershoots occur, measure the worst case pulse duration for each magnitude and compare the results against the AF = 1 specifications (note: multiple overshoot/undershoot events within one clock cycle must have their pulse durations summed together to determine the total pulse duration). If all of these worst case overshoot or undershoot events meet the specifications (measured time < specifications) in the table where AF = 1, then the system passes.

Table 20. 100 MHz AGTL+ Signal Group Overshoot/Undershoot Tolerance

Overshoot/Undershoot Magnitude	Maximum Pulse Duration			Unit	Figure	Notes[1, 2, 3, 4, 5]
	AF = 0.01	AF = 0.1	AF = 1			
2.3 V	20	2.53	0.25	ns	15	
2.25 V	20	4.93	0.49	ns	15	
2.2 V	20	9.1	0.91	ns	15	
2.15 V	20	16.6	1.67	ns	15	
2.1 V	20	20	3.0	ns	15	
2.05 V	20	20	5.5	ns	15	
2.0 V	20	20	10	ns	15	

NOTES:
1. BCLK period is 10 ns.
2. These values are specified at the processor core pins.
3. Overshoot/Undershoot Magnitude = 2.3 V is an absolute value and should never be exceeded.
4. Overshoot is measured relative to V_{SS}, while undershoot is measured relative to V_{TT}.
5. Overshoot/Undershoot Pulse Duration is measured relative to 1.635 V.

Downloaded from Arrow.com.

Table 21. 133 MHz AGTL+ Signal Group Overshoot/Undershoot Tolerance

Overshoot/Undershoot Magnitude	Maximum Pulse Duration			Unit	Figure	Notes[1, 2, 3, 4, 5]
	AF = 0.01	AF = 0.1	AF = 1			
2.3 V	15	1.9	0.19	ns	15	
2.25 V	15	3.7	0.37	ns	15	
2.2 V	15	6.8	0.68	ns	15	
2.15 V	15	12.5	1.25	ns	15	
2.1 V	15	15	2.28	ns	15	
2.05 V	15	15	4.1	ns	15	
2.0 V	15	15	7.5	ns	15	

NOTES:
1. BCLK period is 7.5 ns.
2. These values are specified at the processor core pins.
3. Overshoot/Undershoot Magnitude = 2.3 V is an absolute value and should never be exceeded.
4. Overshoot is measured relative to V_{SS}, while undershoot is measured relative to V_{TT}.
5. Overshoot/Undershoot Pulse Duration is measured relative to 1.635 V.

Table 22. 33 MHz Non-AGTL+ Signal Group Overshoot/Undershoot Tolerance

Overshoot/Undershoot Magnitude	Maximum Pulse Duration			Unit	Figure	Notes[1, 2, 3, 4, 5, 6]
	AF = 0.01	AF = 0.1	AF = 1			
2.3 V	60	7.6	0.76	ns	15	
2.25 V	60	14.8	1.48	ns	15	
2.2 V	60	27.2	2.7	ns	15	
2.15 V	60	50	5	ns	15	
2.1 V	60	60	9.1	ns	15	
2.05 V	60	60	16.4	ns	15	
2.0 V	60	60	30	ns	15	

NOTES:
1. PICCLK period is 30 ns.
2. This table applies to all 1.5 V tolerant non-AGTL+ signals. BCLK, PICCLK, and PWRGOOD are the only non-AGTL+ signals that are 2.5 V tolerant at the processor core pins.
3. These values are specified at the processor core pins.
4. Overshoot/Undershoot Magnitude = 2.3 V is an absolute value and should never be exceeded.
5. Overshoot is measured relative to V_{SS}, while undershoot is measured relative to V_{TT}.
6. Overshoot/Undershoot Pulse Duration is measured relative to 1.635 V.

Downloaded from Arrow.com.

Figure 15. Maximum Acceptable AGTL+ and Non-AGTL+ Overshoot/Undershoot Waveform

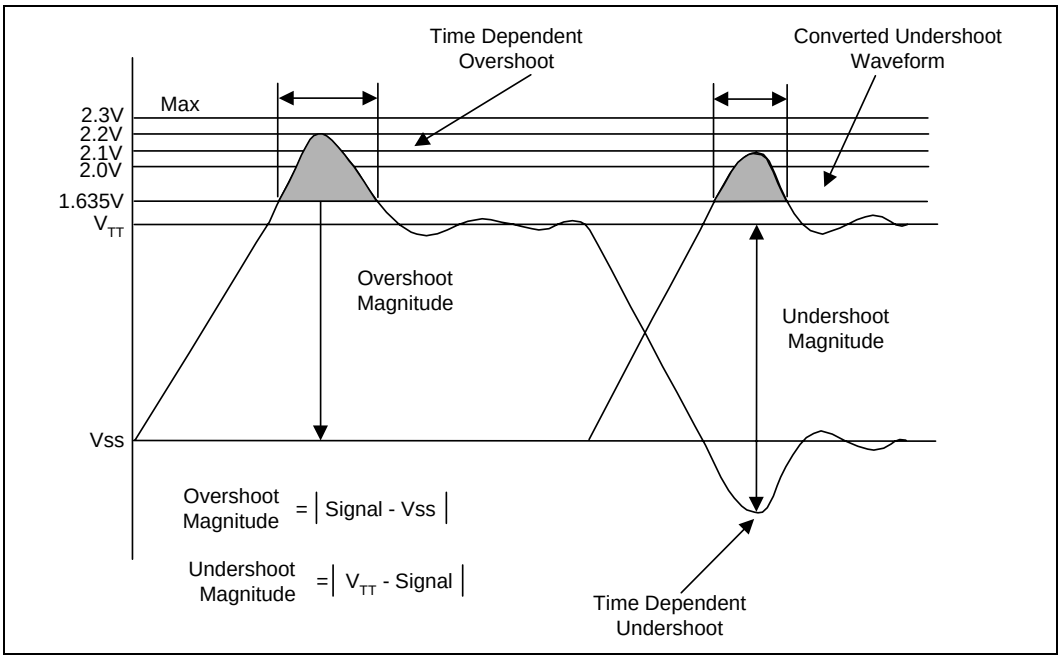

3.3 AGTL+ and Non-AGTL+ Ringback Specifications and Measurement Guidelines

Ringback refers to the amount of reflection seen after a signal has switched. The ringback specification is *the voltage that the signal rings back to after achieving its maximum absolute value*. (See Figure 16 for an illustration of ringback.) Excessive ringback can cause false signal detection or extend the propagation delay. The ringback specification applies to the input pin of each receiving agent. Violations of the signal ringback specification are not allowed under any circumstances for both AGTL+ and non-AGTL+ signals.

When performing simulations to determine the impact of ringback, ESD diodes must be properly characterized. The Intel provided *Pentium III Processor I/O Buffer Models* contain I/O capacitance characterization. Therefore, removing the ESD diodes from the I/O buffer model will impact results and may yield incorrect ringback. If other I/O buffer models are being used to characterize Pentium III processor performance, care must be taken to ensure that ESD models account for the I/O capacitance. See Table 24 for the signal ringback specifications for both AGTL+ and non-AGTL+ signals for simulations at the processor core.

Downloaded from Arrow.com.

Table 23. Signal Ringback Specifications for Signal Simulation

Input Signal Group	Transition	Maximum Ringback (with Input Diodes Present)	Unit	Figure	Notes[1]
AGTL+	0 → 1	V_{REF} + 0.200	V	16	
AGTL+	1 → 0	V_{REF} – 0.200	V	16	
Non-AGTL+ Signals	0 → 1	1.7	V	16	2
Non-AGTL+ Signals	1 → 0	0.7	V	16	2
PWRGOOD	0 → 1	2.00	V	16	

NOTES:
1. Unless otherwise noted, all specifications in this table apply to all Pentium III processor frequencies and cache sizes.
2. Non-AGTL+ signals except PWRGOOD.

There are three signal quality parameters defined for both AGTL+ and non-AGTL+ signals: overshoot/undershoot, ringback, and settling limit. All three signal quality parameters are shown in Table 24 for the AGTL+ and non-AGTL+ signal group.

Table 24. AGTL+ and Non-AGTL+ Signal Groups Ringback Tolerance Specifications [1, 2, 3, 4]

T# Parameter	Min	Unit	Figure	Notes
α_α: Overshoot	100	mV	16	4, 8
τ_τ: Minimum Time at High	0.50	ns	16	
ρ_ρ: Amplitude of Ringback	–200	mV	16	5, 6, 7, 8
ϕ_ϕ: Final Settling Voltage	200	mV	16	8
δ_δ: Duration of Squarewave Ringback	N/A	ns	16	

NOTES:
1. Unless otherwise noted, all specifications in this table apply to all Pentium III processor frequencies and cache sizes.
2. These values are specified at the processor core pins.
3. Specifications are for the edge rate of 0.3 – 0.8 $^{V}/_{ns}$. See Figure 16 for the generic waveform.
4. See Table 22 for maximum allowable overshoot.
5. Ringback between V_{REF} + 100 mV and V_{REF} + 200 mV or V_{REF} –200 mV and V_{REF} – 100 mV requires the flight time measurements to be adjusted as described in the AGTL+ Specification (*Intel® Pentium® II Developers Manual*). Ringback below V_{REF} + 100 mV or above V_{REF} – 100 mV is not supported.
6. Intel recommends simulations not exceed a ringback value of V_{REF} ± 200 mV to allow margin for other sources of system noise.
7. A negative value for ρ_ρ indicates that the amplitude of ringback is above V_{REF}. (i.e., f = -100 mV specifies the signal cannot ringback below V_{REF} + 100 mV).
8. ϕ_ϕ and ρ_ρ: are measured relative to V_{REF}. α_α: is measured relative to V_{REF} + 200 mV.

Downloaded from Arrow.com.

Figure 16. Low to High AGTL+ and Non-AGTL+ Receiver Ringback Tolerance

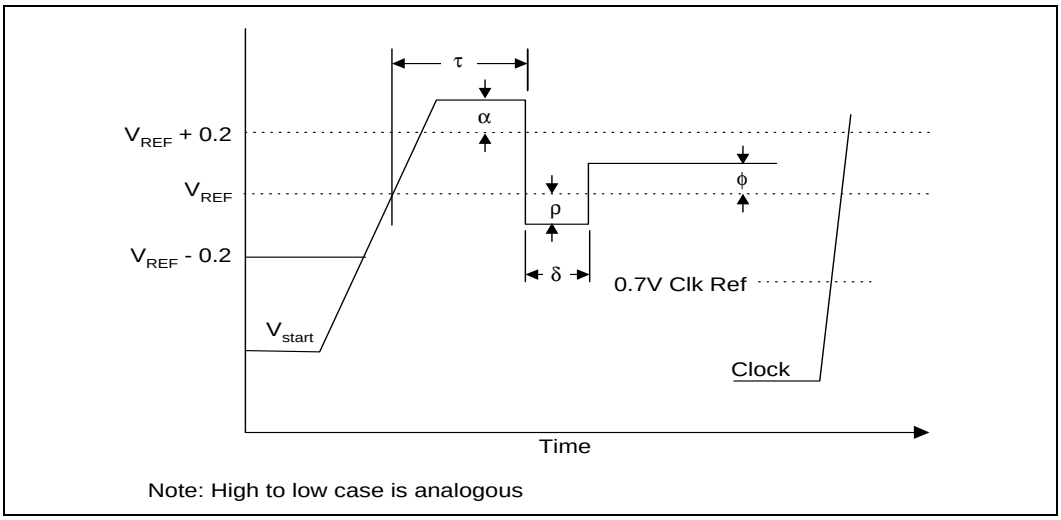

Figure 17. Signal Overshoot/Undershoot, Settling Limit, and Ringback

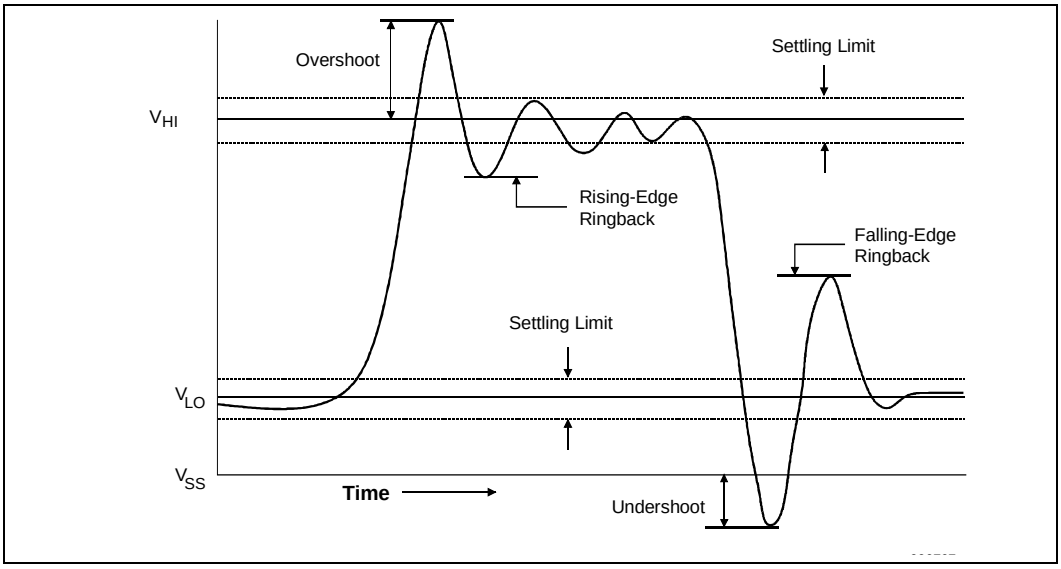

3.3.1 Settling Limit Guideline

Settling limit defines the maximum amount of ringing at the receiving pin that a signal must reach before its next transition. The amount allowed is 10 percent of the total signal swing ($V_{HI} - V_{LO}$) above and below its final value. A signal should be within the settling limits of its final value, when either in its high state or low state, before it transitions again.

Signals that are not within their settling limit before transitioning are at risk of unwanted oscillations which could jeopardize signal integrity. Simulations to verify settling limit may be done either with or without the input protection diodes present. Violation of the settling limit guideline is acceptable if simulations of 5 to 10 successive transitions do not show the amplitude of the ringing increasing in the subsequent transitions.

Downloaded from Arrow.com.

4.0 Thermal Specifications and Design Considerations

Limited quantities of Pentium III processors utilize S.E.C.C. package technology. This technology uses an extended thermal plate for heatsink attachment. The extended thermal plate interface is intended to provide accessibility for multiple types of thermal solutions. The majority of SC242-based Pentium III processors use S.E.C.C.2 packaging technology. S.E.C.C.2 package technology does not incorporate an extended thermal plate.

This chapter provides needed data for designing a thermal solution. However, for the correct thermal measuring processes, refer to AP-905, *Intel® Pentium® III Processor Thermal Design Guidelines* (Document Number 245087).

Figure 18 provides a 3-dimensional view of an S.E.C.C. package. This figure illustrates the thermal plate location. Figure 19 provides a substrate view of an S.E.C.C.2 package.

Figure 18. S.E.C.Cartridge — 3-Dimensional View

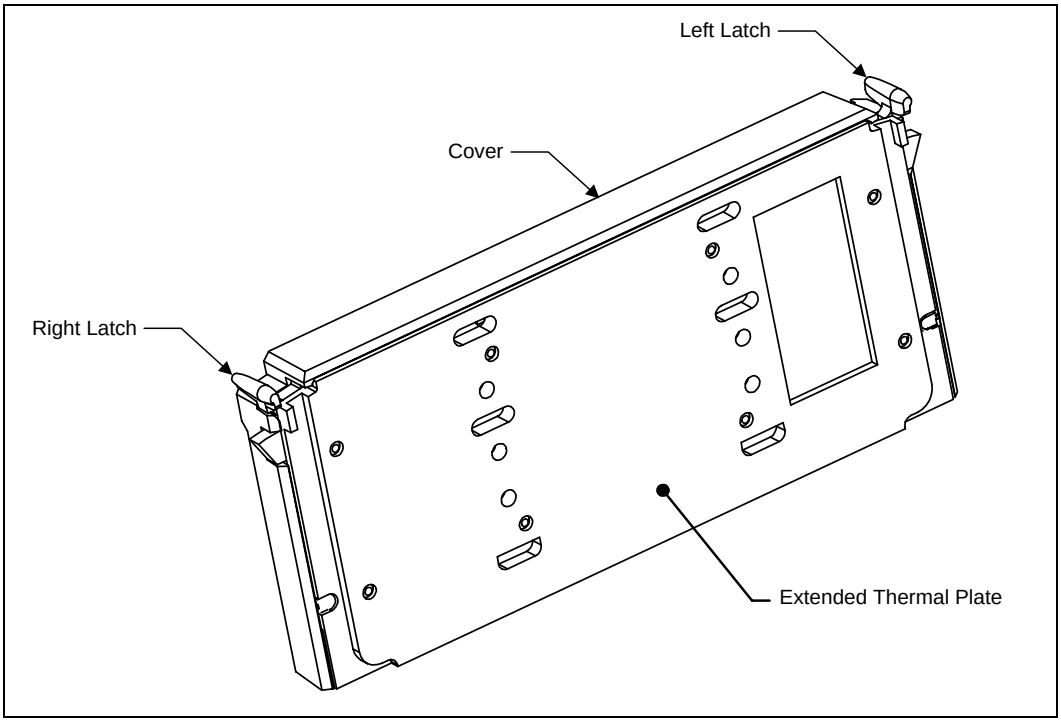

Downloaded from Arrow.com.

Figure 19. S.E.C.Cartridge 2 — Substrate View

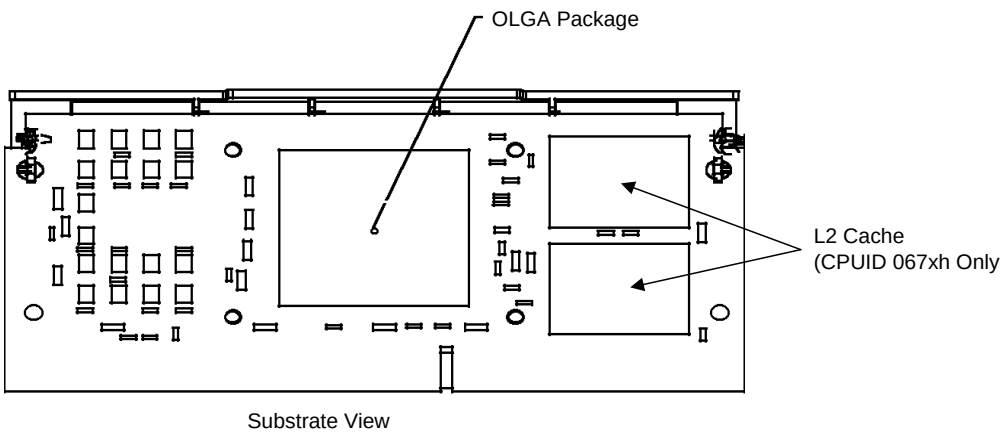

4.1 Thermal Specifications

Table 25 and Table 26 provide the thermal design power dissipation and maximum and minimum temperatures for Pentium III processors with S.E.C.C. and S.E.C.C.2 package technologies respectively. While the processor core dissipates the majority of the thermal power, thermal power dissipated by the L2 cache also impacts the overall processor power specification. This total thermal power is referred to as processor power in the following specifications. Systems should design for the highest possible processor power, even if a processor with a lower thermal dissipation is planned.

Table 25. Thermal Specifications for S.E.C.C. Packaged Processors [1]

Processor Core Frequency (MHz)	L2 Cache Size (KBs)	Processor Power [2] (W)	Extended Thermal Plate Power [3] (W)	Min T_{PLATE} (°C)	Max T_{PLATE} (°C)	Min T_{COVER} (°C)	Max T_{COVER} (°C)
450	512	25.3	25.5	5	70	5	75
500	512	28.0	28.2	5	70	5	75

NOTES:
1. These values are specified at nominal VCC_{CORE} for the processor core and nominal $VCC_{L2}/VCC_{3.3}$ for the L2 cache (if applicable).
2. Processor power includes the power dissipated by the processor core, the L2 cache, and the AGTL + bus termination. The maximum power for each of these components does not occur simultaneously.
3. Extended Thermal Plate power is the processor power that is dissipated through the extended thermal plate.

Downloaded from Arrow.com.

Table 26. Thermal Specifications for S.E.C.C.2 Packaged Processors[1]

Proc. Core Freq. (MHz)	L2 Cache Size (Kbytes)	Thermal Design Power [2] (W)	L2 Cache Power (W)	Power Density[4] (W/cm^2) Up to CPUID 0683h	Power Density[4] (W/cm^2) For CPUID 0686h[6]	Max $T_{JUNCTION}$ (°C)	$T_{JUNCTION}$ Offset[3] (°C)	L2 Cache Min T_{CASE} (°C)	L2 Cache Max T_{CASE} (°C)	Min T_{COVER} (°C)	Max T_{COVER} (°C)
450	512	25.3	1.26	21.6[5]	n/a	90	4.8	5	105	5	75
500	512	28.0	1.33	23.9[5]	n/a	90	4.8	5	105	5	75
533B	512	29.7	1.37	25.4[5]	n/a	90	4.8	5	105	5	75
533EB	256	14.0	N/A	19.3[6]	22.0	82	2.0[7]	N/A	N/A	5	75
550	512	30.8	1.37	26.3[5]	n/a	80	4.8	5	105	5	75
550E	256	14.5	N/A	20.0[6]	22.8	82	2.1[7]	N/A	N/A	5	75
600	512	34.5	1.60	29.5[5]	n/a	85	4.8	5	105	5	75
600B	512	34.5	1.60	29.5[5]	n/a	85	4.8	5	105	5	75
600E	256	15.8	N/A	21.8[6]	24.8	82	2.3[7]	N/A	N/A	5	75
600EB	256	15.8	N/A	21.8[6]	24.8	82	2.3[7]	N/A	N/A	5	75
650	256	17.0	N/A	23.4[6]	26.7	82	2.5[7]	N/A	N/A	5	75
667	256	17.5	N/A	24.1[6]	27.5	82	2.5[7]	N/A	N/A	5	75
700	256	18.3	N/A	25.2[6]	28.7	80	2.7[7]	N/A	N/A	5	75
733	256	19.1	N/A	26.3[6]	30.0	80	2.8[7]	N/A	N/A	5	75
750	256	19.5	N/A	26.9[6]	30.6	80	2.8[7]	N/A	N/A	5	75
800	256	20.8	N/A	28.7[6]	32.6	80	3.0[7]	N/A	N/A	5	75
800EB	256	20.8	N/A	28.7[6]	32.6	80	3.0[7]	N/A	N/A	5	75
850	256	22.5	N/A	31.0[6]	35.2	80	3.3[7]	N/A	N/A	5	75
866	256	22.9	N/A	31.5[6]	35.9	80	3.3[7]	N/A	N/A	5	75
933	256	25.5	N/A	35.1[6]	39.9	75	3.7	N/A	N/A	5	75
1.0 GHz[8]	256	33	N/A	45.5[6]	n/a	60	4.7[7,8]	N/A	N/A	5	75
1.0 GHz	256	26.1	N/A	35.9[6]	40.9	70	3.8[7]	N/A	N/A	5	70
1.0B GHz	256	26.1	N/A	35.9[6]	40.9	70	3.8[7]	N/A	N/A	5	70

NOTES:

1. These values are specified at nominal VCC_{CORE} for the processor core and nominal $VCC_{L2}/VCC_{3.3}$ for the L2 cache (if applicable).
2. Thermal Design Power (TDP) represents the maximum amount of power the thermal solution is required to dissipate. The thermal solution should be designed to dissipate the TDP without exceeding the maximum $T_{JUNCTION}$ specification. TDP does not represent the power delivery and voltage regulation requirements for the processor.
3. $T_{JUNCTIONOFFSET}$ is the worst-case difference between the thermal reading from the on-die thermal diode and the hottest location on the processor's core.
4. Power density is the maximum power the processor die can dissipate (i.e., processor power) divided by the die area over which the power is generated.
5. Power for these processors is generated over the entire processor die (see Figure 41 for processor die dimensions).
6. Power for these processors is generated over the core area (see Figure 20 for processor die and core area dimensions). Thermal solution designs should compensate for this smaller heat flux area (core) and not assume that the power is uniformly distributed across the entire die area (core + cache).
7. $T_{JUNCTION}$ offset values do not include any thermal diode kit measurement error. Diode kit measurement error must be added to the $T_{JUNCTION}$ offset value from the table, as outlined in the *Intel® Pentium® III processor Thermal Metrology for CPUID-068h Family Processors*. Intel has characterized the use of the Analog Devices AD1021 diode measurement kit and found its measurement error to be 1 °C.
8. This specification applies to the Pentium III processor with CPUID=0683h operating at 1.0 GHz.
9. These values are estimates based on preliminary simulation.

Downloaded from Arrow.com.

Figure 20. Processor Functional Die Layout (CPUID=0686h)

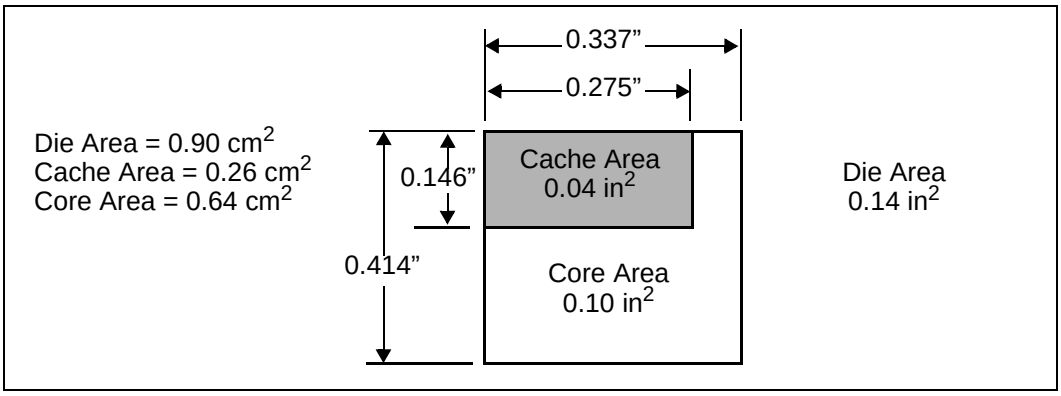

Figure 21. Processor Functional Die Layout (up to CPUID=0683h)

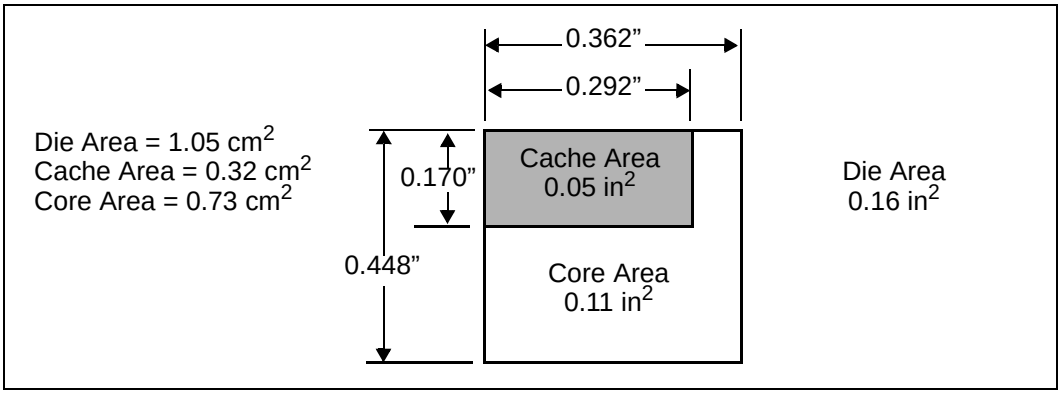

For S.E.C.C. packaged processors, the extended thermal plate is the attach location for all thermal solutions. The maximum and minimum extended thermal plate temperatures are specified in Table 25. For S.E.C.C.2 packaged processors, thermal solutions attach to the processor by connecting through the substrate to the cover. The maximum and minimum temperatures of the pertinent locations are specified in Table 26. A thermal solution should be designed to ensure the temperature of the specified locations never exceeds these temperatures.

The total processor power is a result of heat dissipated by the processor core and L2 cache. The overall system chassis thermal design must comprehend the entire processor power. In S.E.C.C. packaged processors, the extended thermal plate power is a component of this power, and is primarily composed of the processor core and the L2 cache dissipating heat through the extended thermal plate. The heatsink need only be designed to dissipate the extended thermal plate power. See Table 25 for current Pentium III processor S.E.C.C. thermal design specifications.

No extended thermal plate exists for S.E.C.C.2 packaged processors, so thermal solutions have to attach directly to the processor core package. The total processor power dissipated by an S.E.C.C.2 processor is a combination of heat dissipated by both the processor core and L2 cache. Pentium III processors that use a “Discrete” L2 cache have a separate T_{CASE} specification (Table 26) for the surface mounted BSRAM components on the substrate. $T_{JUNCTION}$ encompasses the L2 cache for processors that utilize the “Advanced Transfer Cache”, therefore no separate cache measurement is required.

Specifics on how to measure these specifications are outlined in AP-905, *Intel® Pentium® III Processor Thermal Design Guidelines* (Document Number 245087).

Downloaded from Arrow.com.

4.1.1 Thermal Diode

The Pentium III processor incorporates an on-die diode that may be used to monitor the die temperature (junction temperature). A thermal sensor located on the baseboard, or a stand-alone measurement kit, may monitor the die temperature of the Pentium III processor for thermal management or instrumentation purposes. Table 27 and Table 28 provide the diode parameter and interface specifications.

Table 27. Thermal Diode Parameters

Symbol	Min	Typ	Max	Unit	Notes[1]
$I_{forward\ bias}$	5		500	µA	
n_ideality	1.0000 1.0057	1.0065 1.0080	1.0173 1.0125		2, 3, 4 2, 3, 5

NOTES:
1. Intel does not support or recommend operation of the thermal diode under reverse bias.
2. At room temperature with a forward bias of 630 mV.
3. n_ideality is the diode ideality factor parameter, as represented by the diode equation: I=Io(e (Vd*q)/(nkT) – 1).
4. This specification applies to the Pentium III processor with CPUID=067xh.
5. This specification applies to the Pentium III processor with CPUID=068xh.

Table 28. Thermal Diode Interface

Pin Name	SC 242 Connector Signal #	Pin Description
THERMDP	B14	diode anode (p_junction)
THERMDN	B15	diode cathode (n_junction)

Downloaded from Arrow.com.

5.0 S.E.C.C. and S.E.C.C.2 Mechanical Specifications

Pentium III processors use either S.E.C.C. or S.E.C.C.2 package technology. Both package types contain the processor core, L2 cache, and other passive components. The cartridges connect to the baseboard through an edge connector. Mechanical specifications for the processor are given in this section. See Section 1.1.1 for a complete terminology listing.

5.1 S.E.C.C. Mechanical Specifications

S.E.C.C. package drawings and dimension details are provided in Figure 22 through Figure 31. Figure 22 shows multiple views of the Pentium III processor in an S.E.C.C. package; Figure 23 through Figure 26 show the package dimensions; Figure 27 and Figure 28 show the extended thermal plate dimensions; and Figure 29 and Figure 30 provide details of the processor substrate edge finger contacts. Figure 31 and Table 29 contain processor marking information. See Section 5.2 for S.E.C.C.2 mechanical specifications.

The processor edge connector defined in this document is referred to as the “SC242 connector.” See the *Slot 1 Connector Specification* (Document Number 243397) for further details on the SC242 connector.

Note: For Figure 22 through Figure 44, the following apply:

1. Unless otherwise specified, the following drawings are dimensioned in inches.
2. All dimensions provided with tolerances are guaranteed to be met for all normal production product.
3. Figures and drawings labeled as “Reference Dimensions” are provided for informational purposes only. Reference Dimensions are extracted from the mechanical design database and are nominal dimensions with no tolerance information applied. Reference Dimensions are NOT checked as part of the processor manufacturing. Unless noted as such, dimensions in parentheses without tolerances are Reference Dimensions.
4. Drawings are not to scale.

Figure 22. S.E.C.C. Packaged Processor — Multiple Views

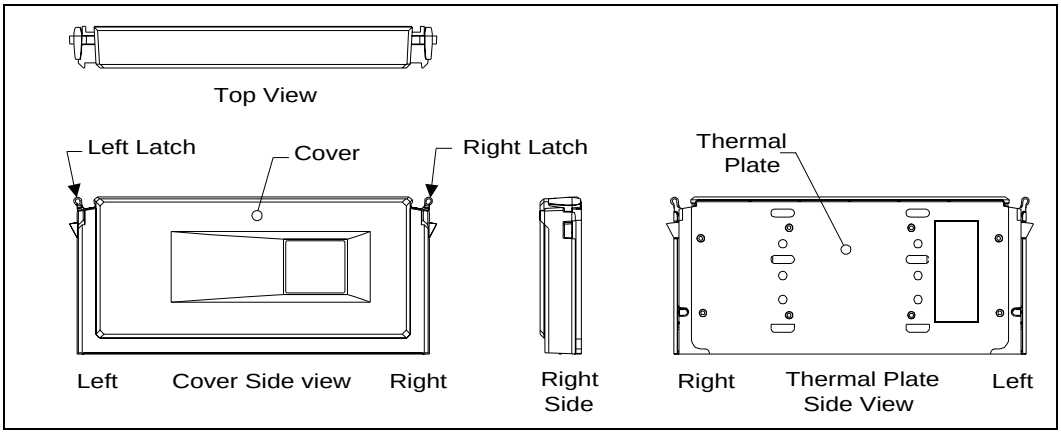

Downloaded from Arrow.com.

Figure 23. S.E.C.C. Packaged Processor — Extended Thermal Plate Side Dimensions

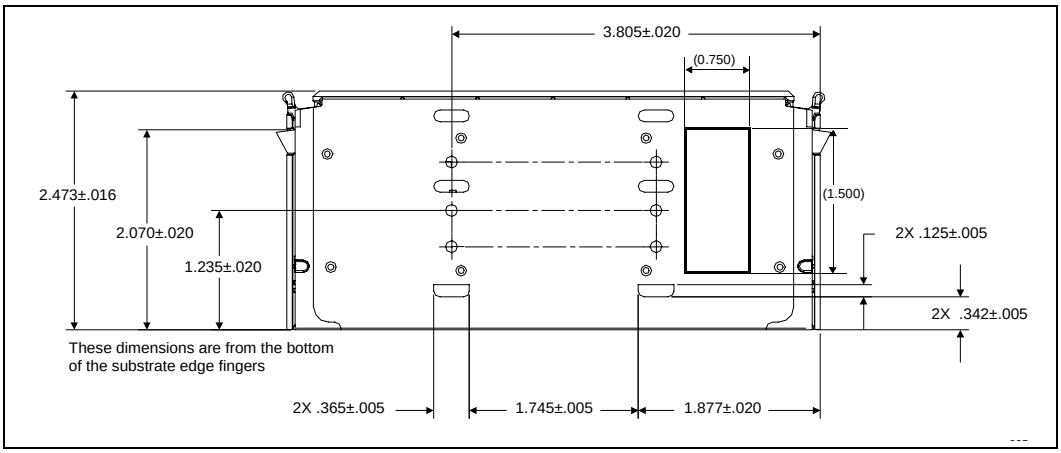

Figure 24. S.E.C.C. Packaged Processor — Bottom View Dimensions

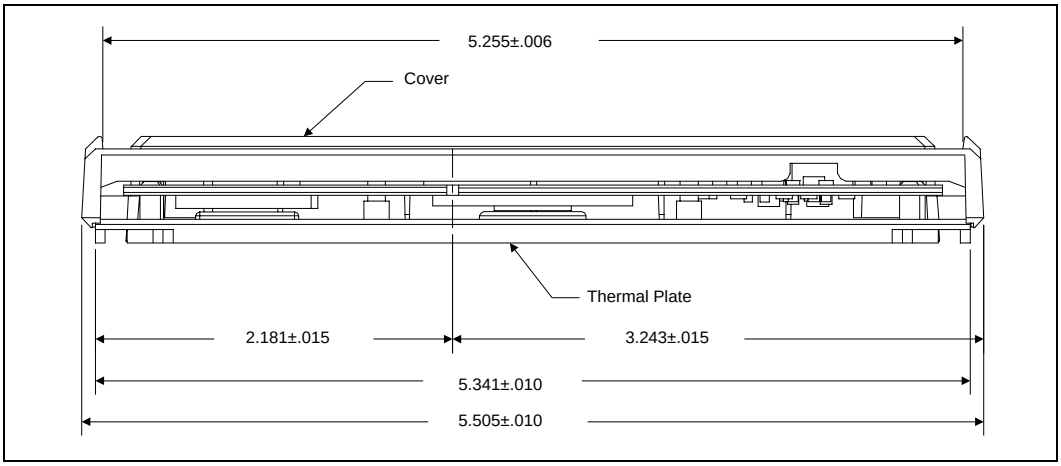

Downloaded from Arrow.com.

Figure 25. S.E.C.C. Packaged Processor — Latch Arm, Extended Thermal Plate Lug, and Cover Lug Dimensions

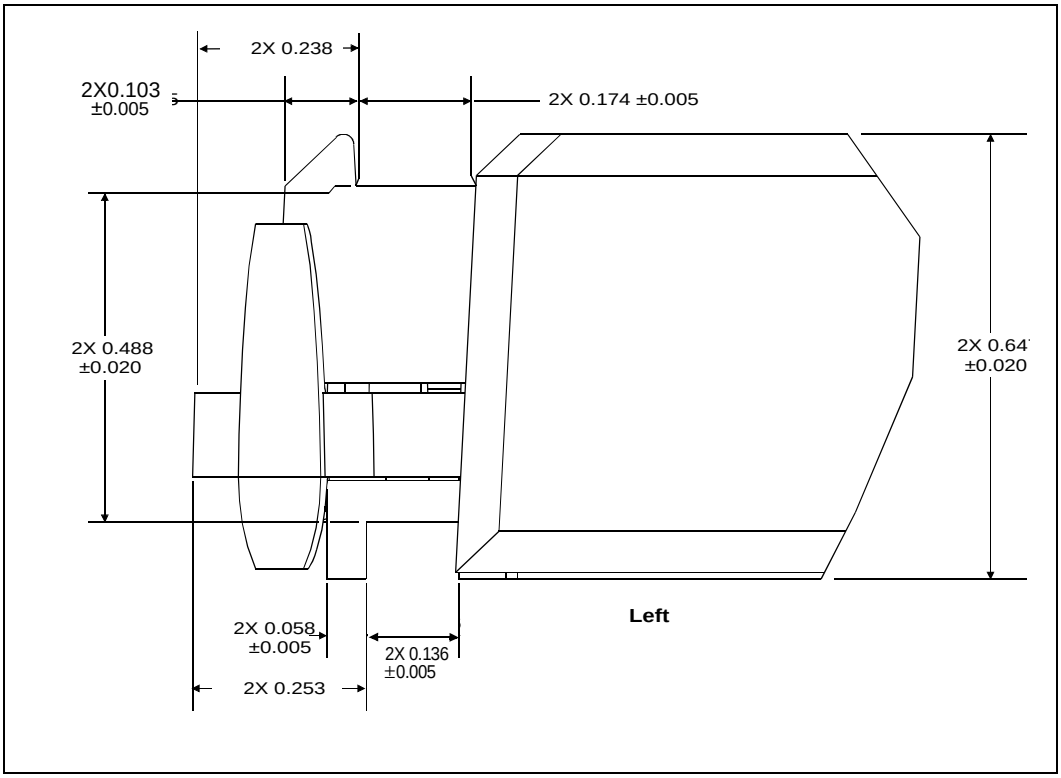

Downloaded from Arrow.com.

Figure 26. S.E.C.C. Packaged Processor — Latch Arm, Extended Thermal Plate, and Cover Detail Dimensions (Reference Dimensions Only)

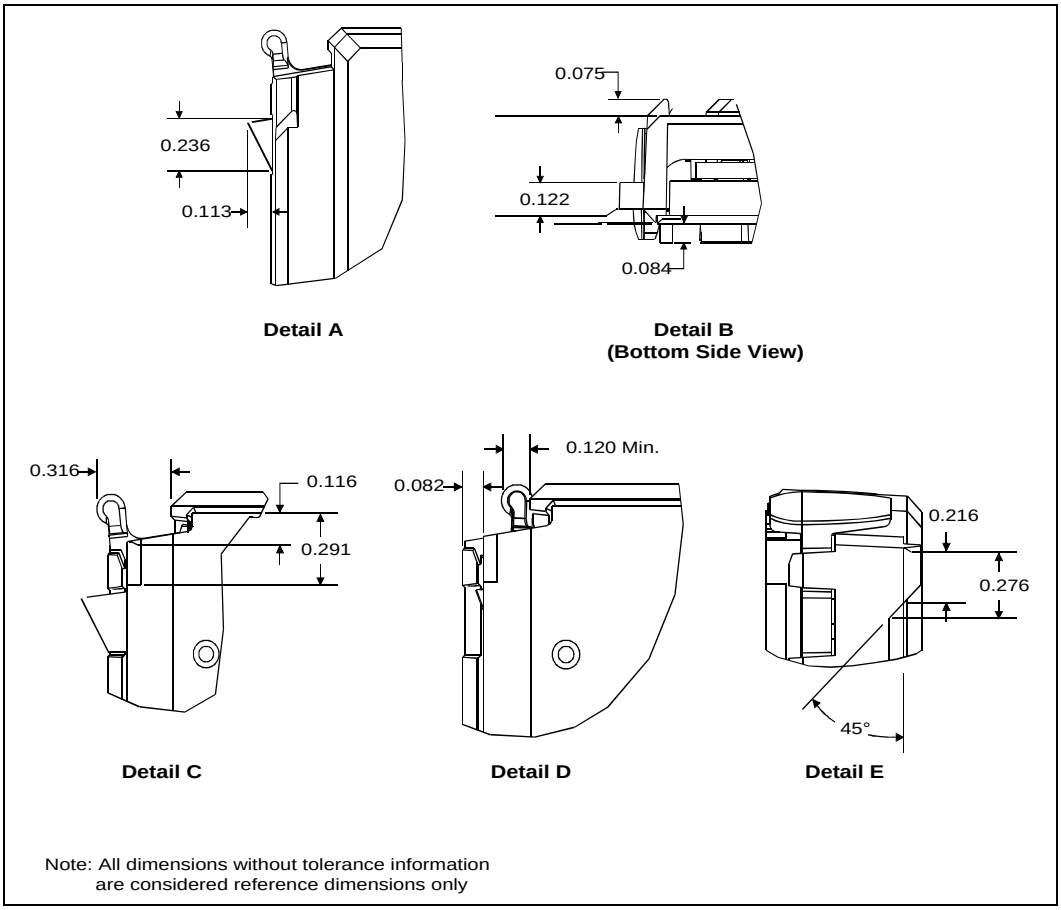

Downloaded from Arrow.com.

Figure 27. S.E.C.C. Packaged Processor — Extended Thermal Plate Attachment Detail Dimensions

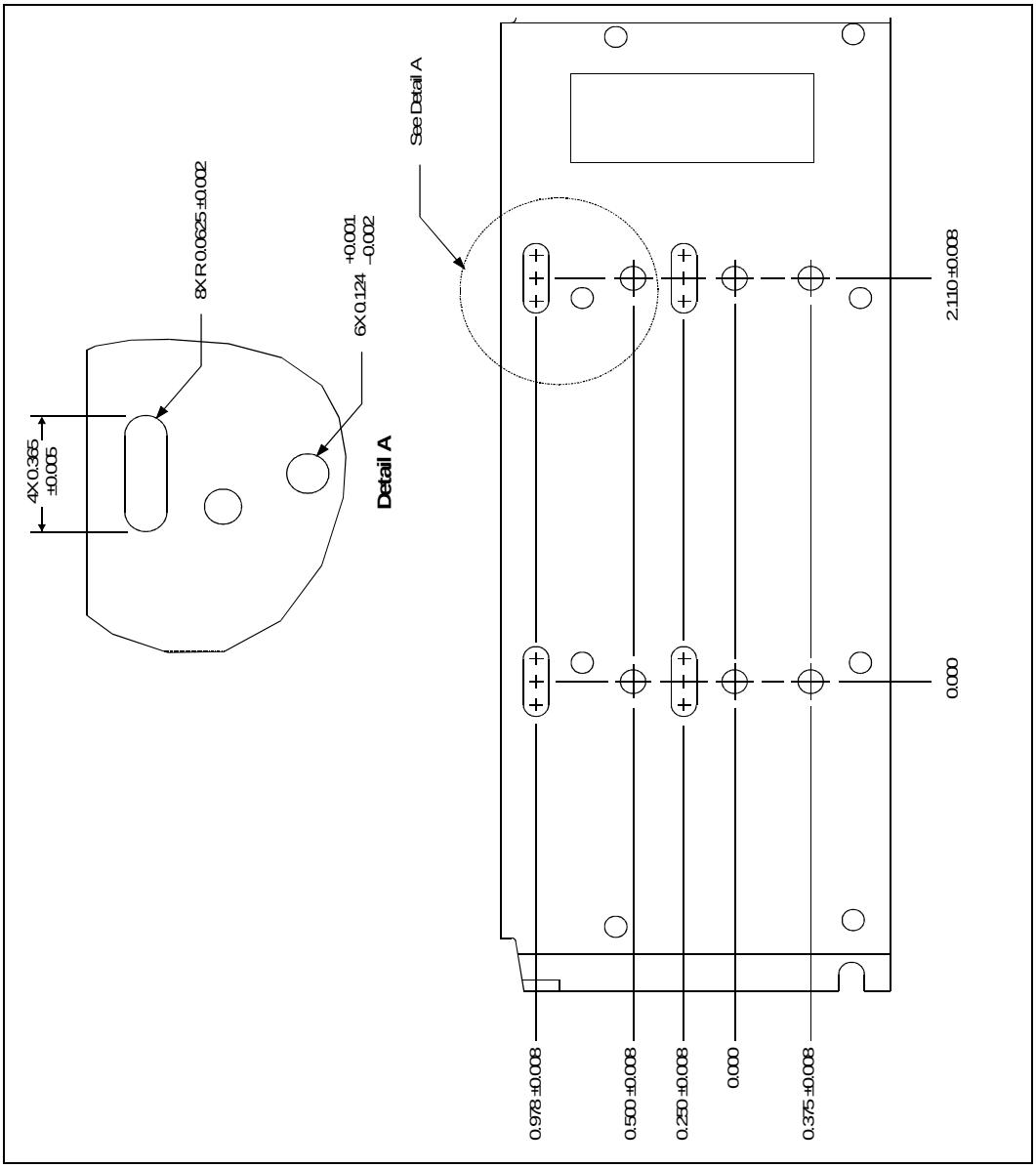

Downloaded from Arrow.com.

Figure 28. S.E.C.C. Packaged Processor — Extended Thermal Plate Attachment Detail Dimensions, Continued

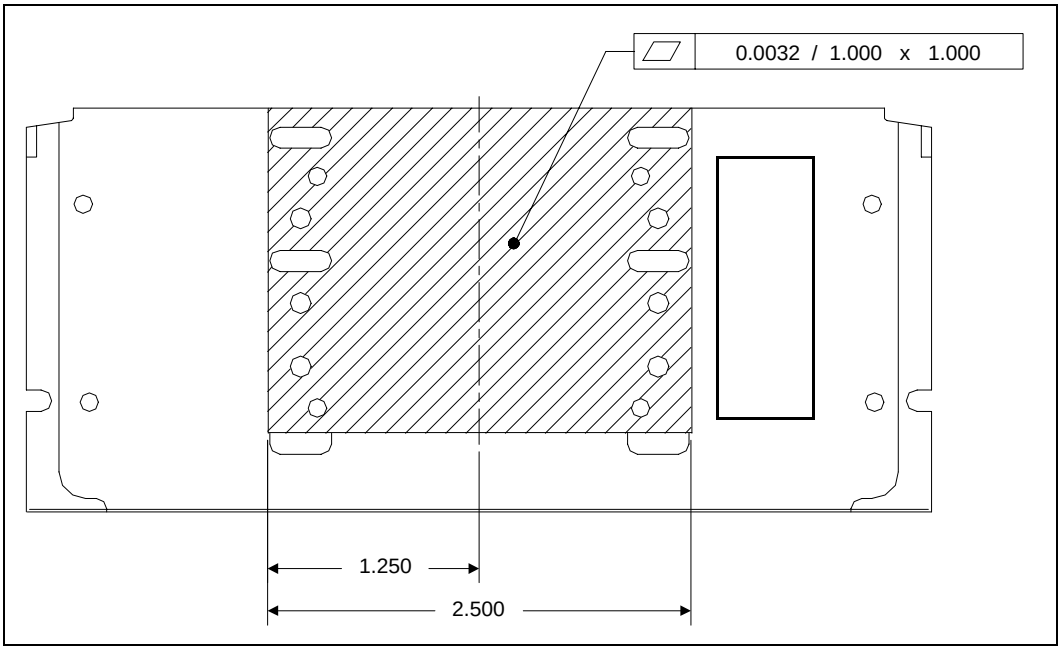

Figure 29. S.E.C.C. Packaged Processor Substrate — Edge Finger Contact Dimensions

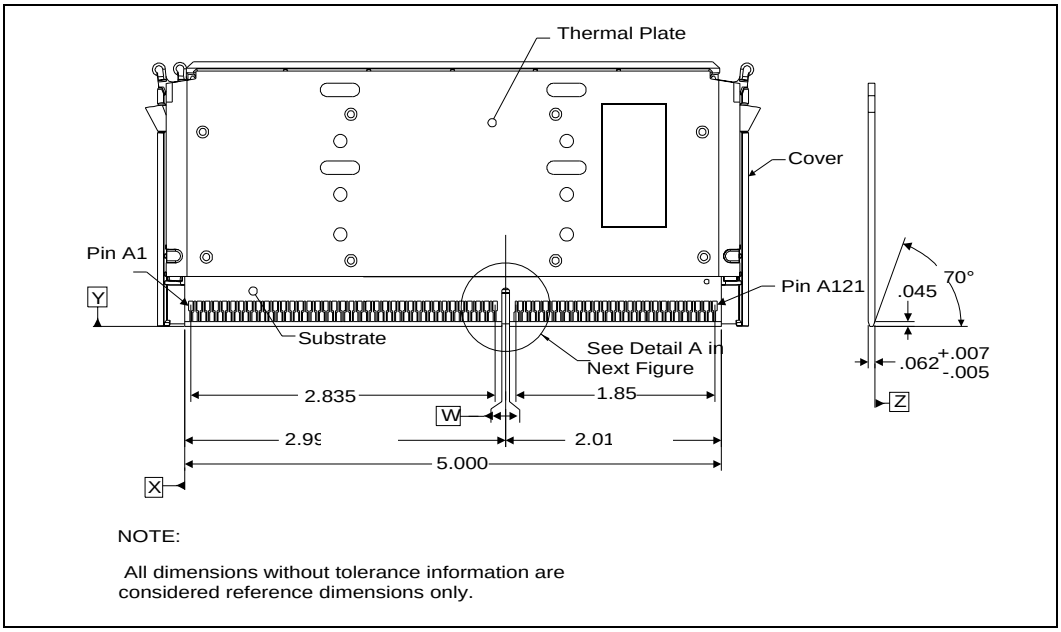

Downloaded from Arrow.com.

Figure 30. S.E.C.C. Packaged Processor Substrate — Edge Finger Contact Dimensions, Detail A

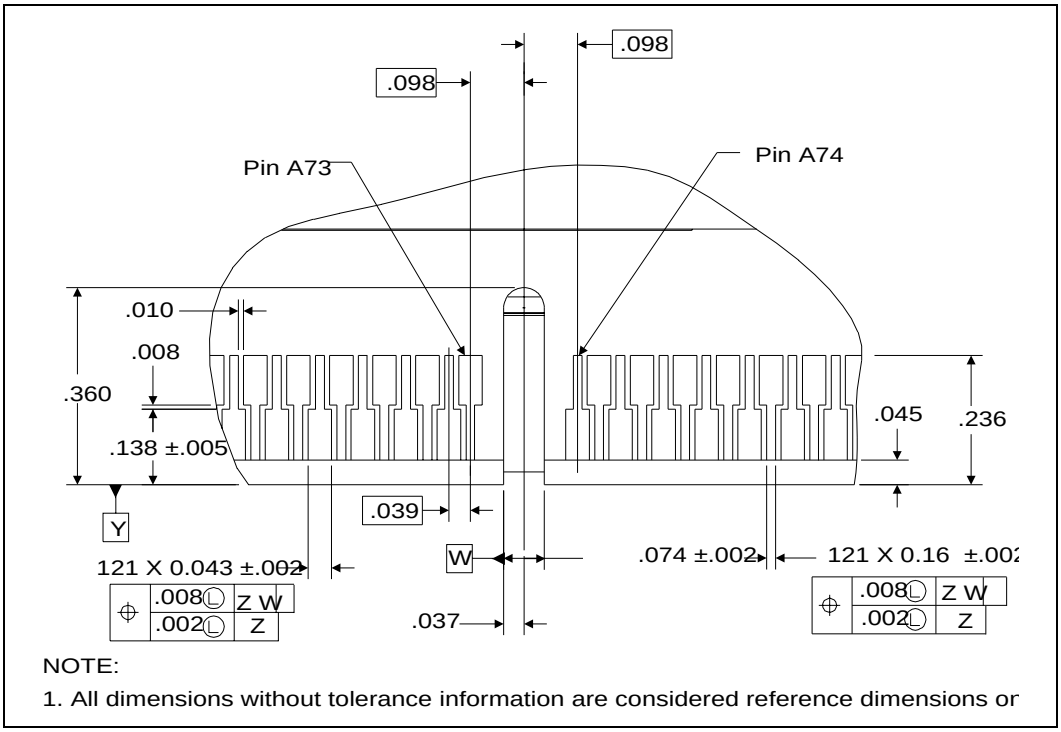

Figure 31. Intel® Pentium® III Processor Markings (S.E.C.C. Packaged Processor)

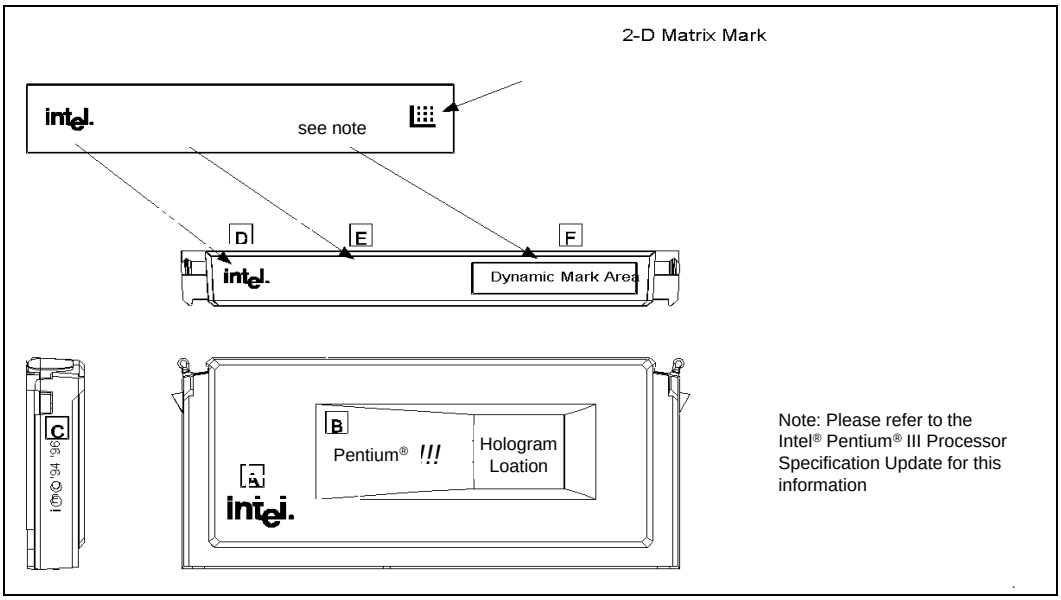

Downloaded from Arrow.com.

Table 29. Description Table for Processor Markings (S.E.C.C. Packaged Processor)

Code Letter	Description
A	Logo
C	Trademark
D	Logo
E	Product Name
F	Dynamic Mark Area – with 2-D matrix

5.2 S.E.C.C.2 Mechanical Specification

S.E.C.C.2 drawings and dimension details are provided in Figure 32 through Figure 44. Figure 32 shows multiple views of the Pentium III processor in an S.E.C.C.2 package; Figure 33 through Figure 37 show an S.E.C.C.2 package dimensions; Figure 38 and Figure 39 provide dimensions of the processor substrate edge finger contacts; Figure 40 shows the heatsink solution keep-in zone; Figure 42 shows multiple views of an S.E.C.C.2 packaged processor keep-out zone; and Figure 44 and Table 40 contain processor marking information. See Section 5.1 for S.E.C.C. Mechanical Specifications.

Figure 32. S.E.C.C.2 Packaged Processor — Multiple Views

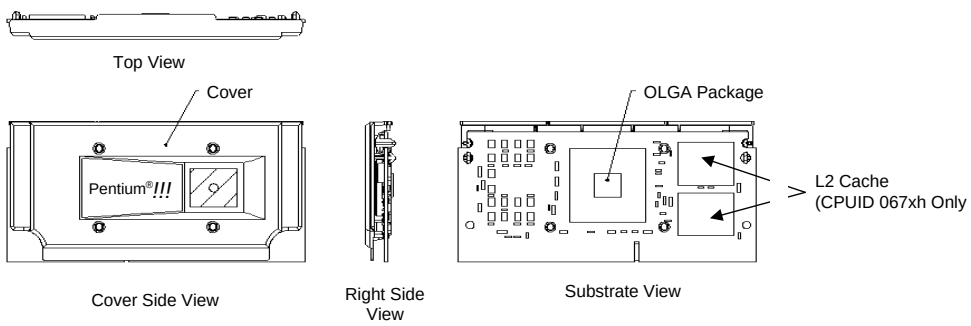

Downloaded from Arrow.com.

Figure 33. S.E.C.C.2 Packaged Processor Assembly — Primary View

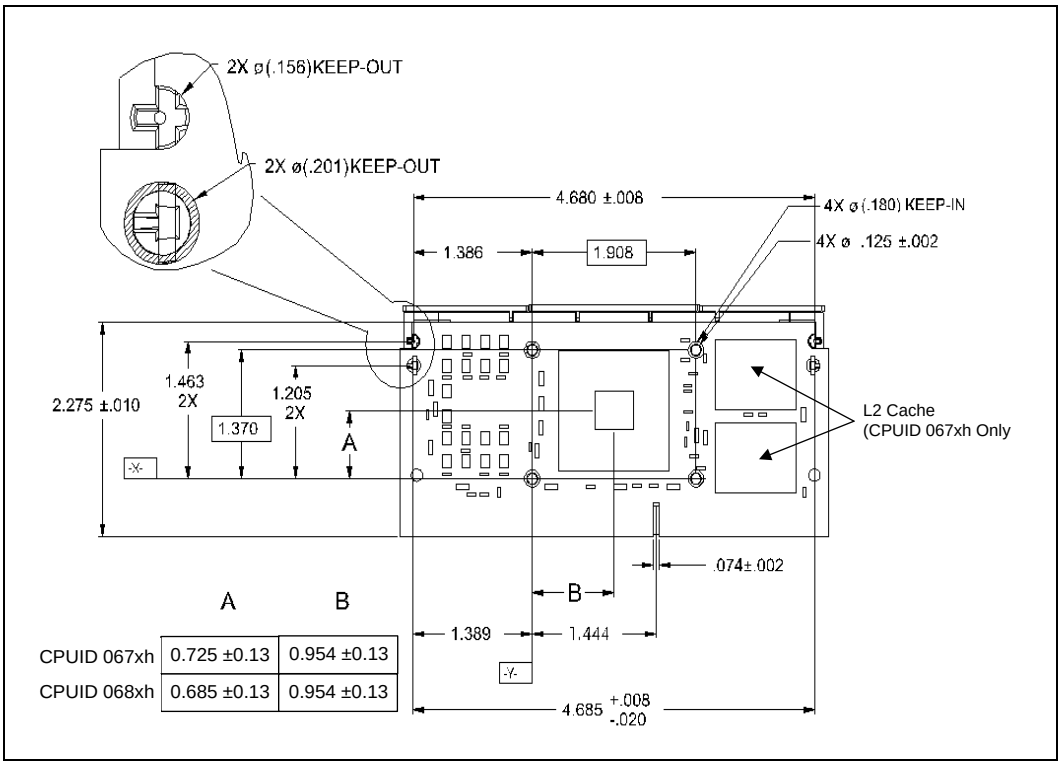

	A	B
CPUID 067xh	0.725 ±0.13	0.954 ±0.13
CPUID 068xh	0.685 ±0.13	0.954 ±0.13

Figure 34. S.E.C.C.2 Packaged Processor Assembly — Cover View with Dimensions

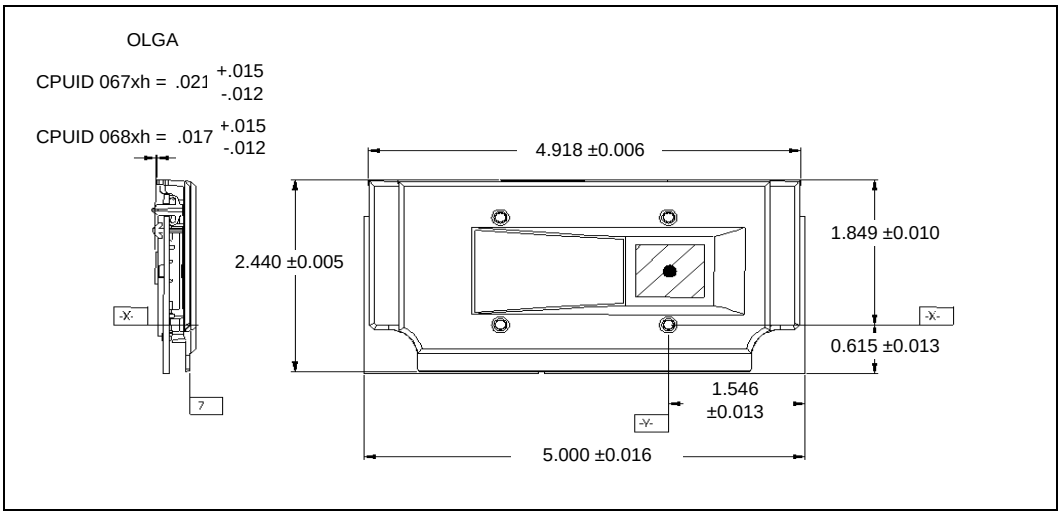

Downloaded from Arrow.com.

Figure 35. S.E.C.C.2 Packaged Processor Assembly — Heatsink Attach Boss Section

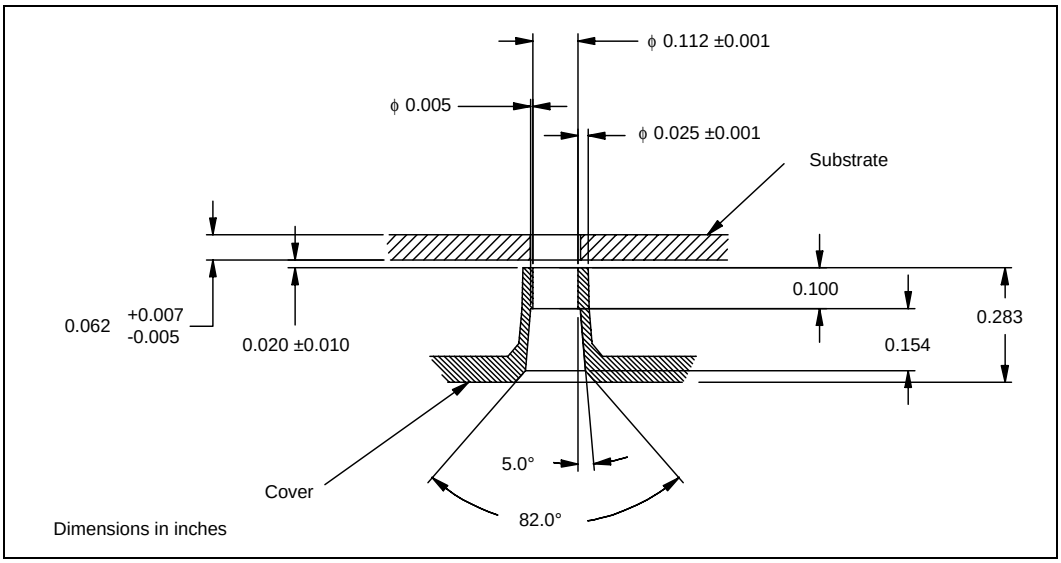

Figure 36. S.E.C.C.2 Packaged Processor Assembly — Side View

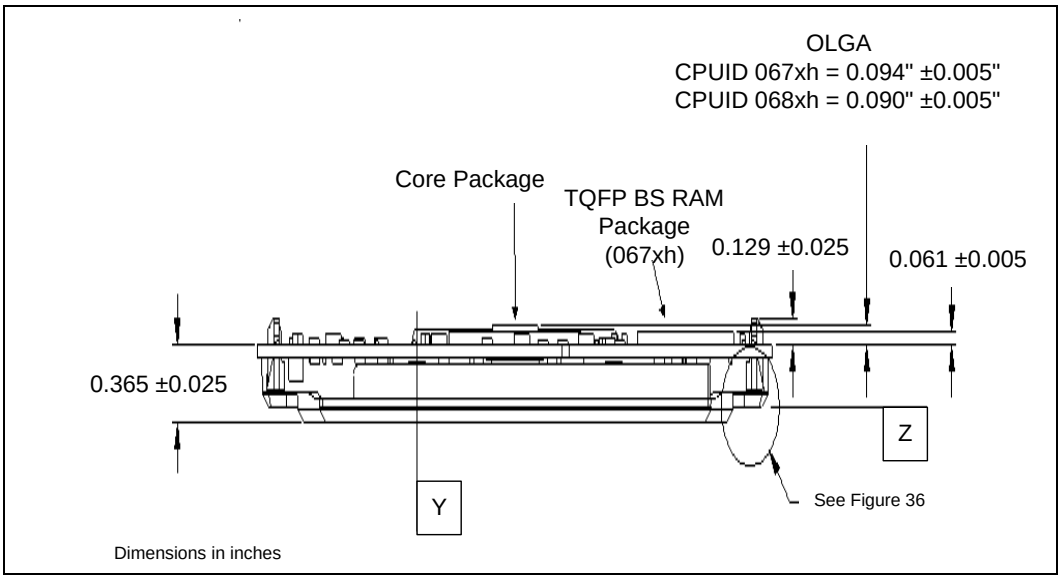

Figure 37. Detail View of Cover in the Vicinity of the Substrate Attach Features

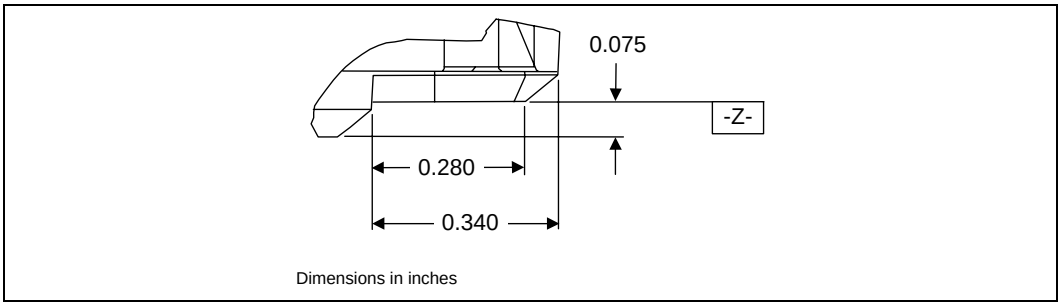

Downloaded from Arrow.com.

Figure 38. S.E.C.C.2 Packaged Processor Substrate — Edge Finger Contact Dimensions

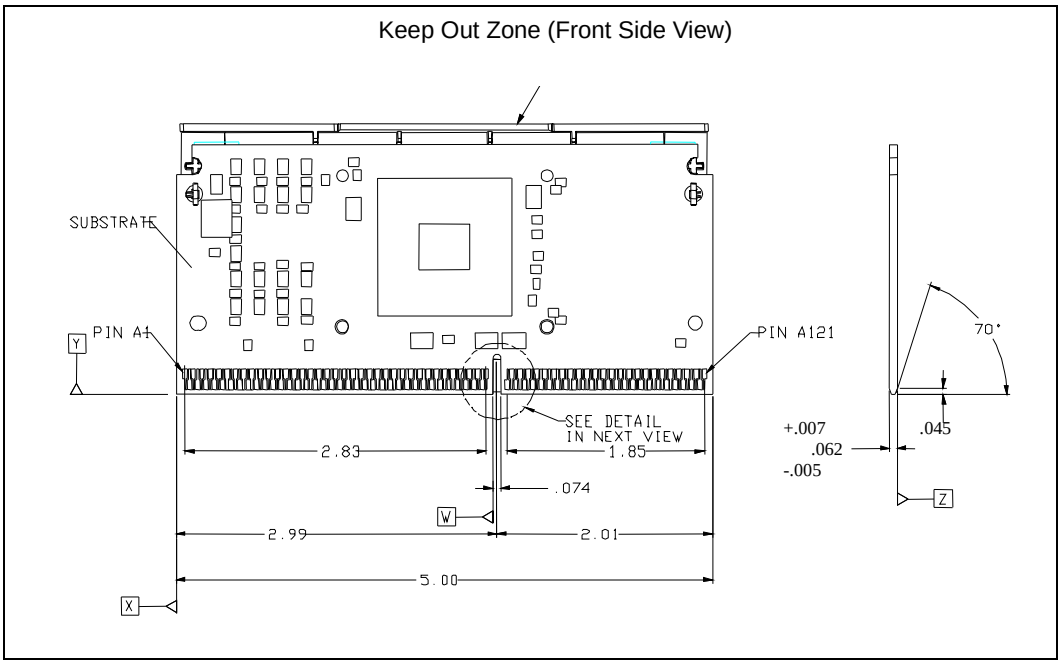

Figure 39. S.E.C.C.2 Packaged Processor Substrate — Edge Finger Contact Dimensions (Detail A)

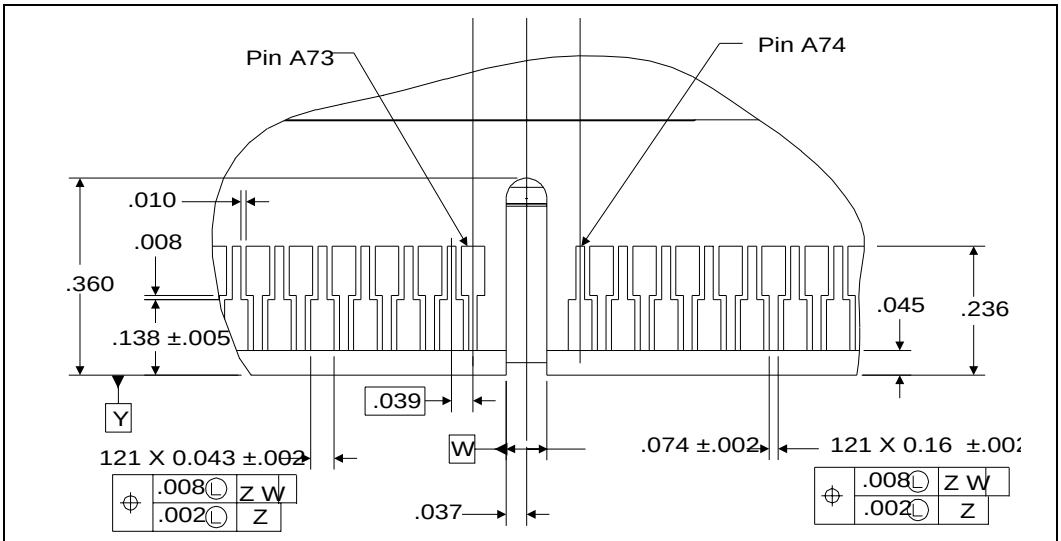

NOTE:

1. All dimensions without tolerance information are considered reference dimensions or

Downloaded from Arrow.com.

Figure 40. S.E.C.C.2 Packaged Processor Substrate (CPUID=067xh) — Keep-In Zones

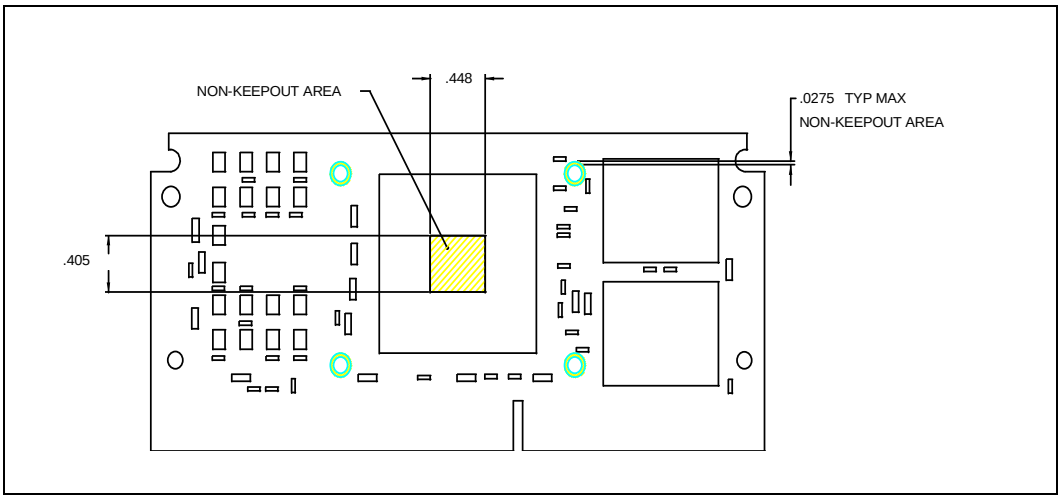

Figure 41. S.E.C.C.2 Packaged Processor Substrate (CPUID=068xh) — Keep-In Zones

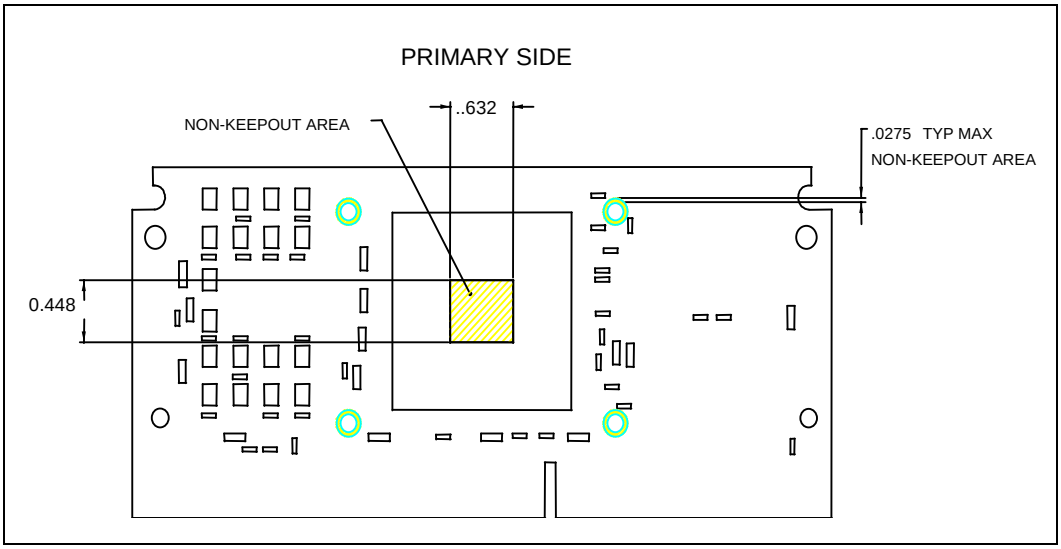

Downloaded from Arrow.com.

Figure 42. S.E.C.C.2 Packaged Processor Substrate (CPUID=067xh) — Keep-Out Zone

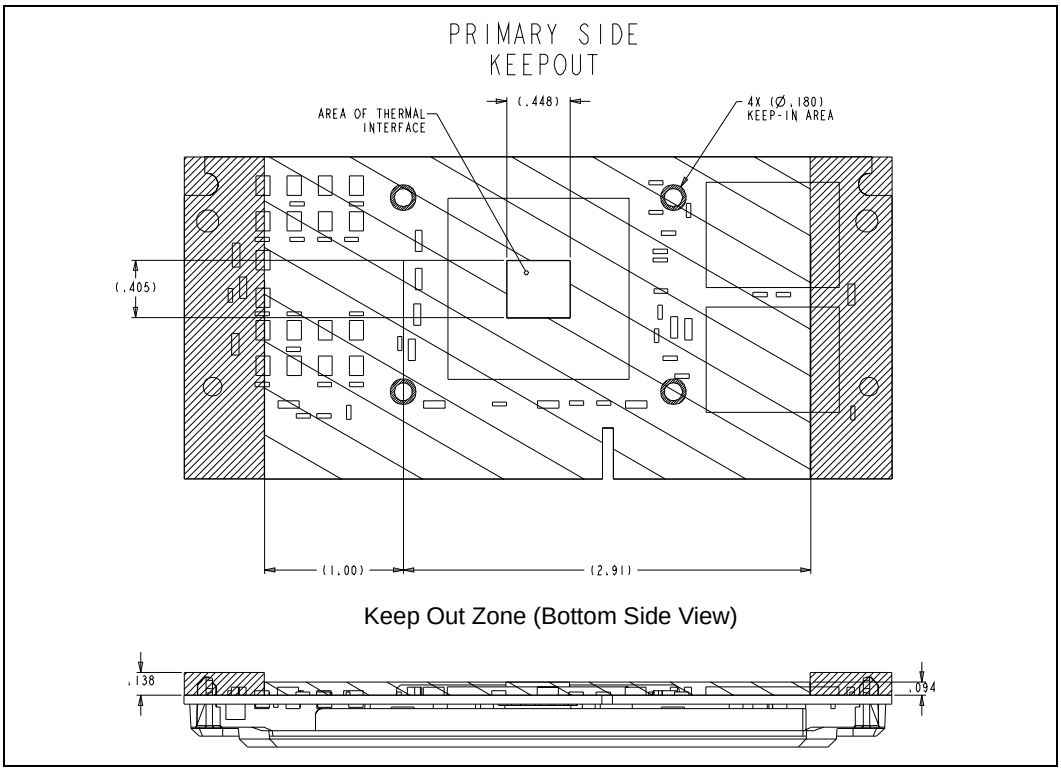

Figure 43. S.E.C.C.2 Packaged Processor Substrate (CPUID=068xh) — Keep-Out Zone

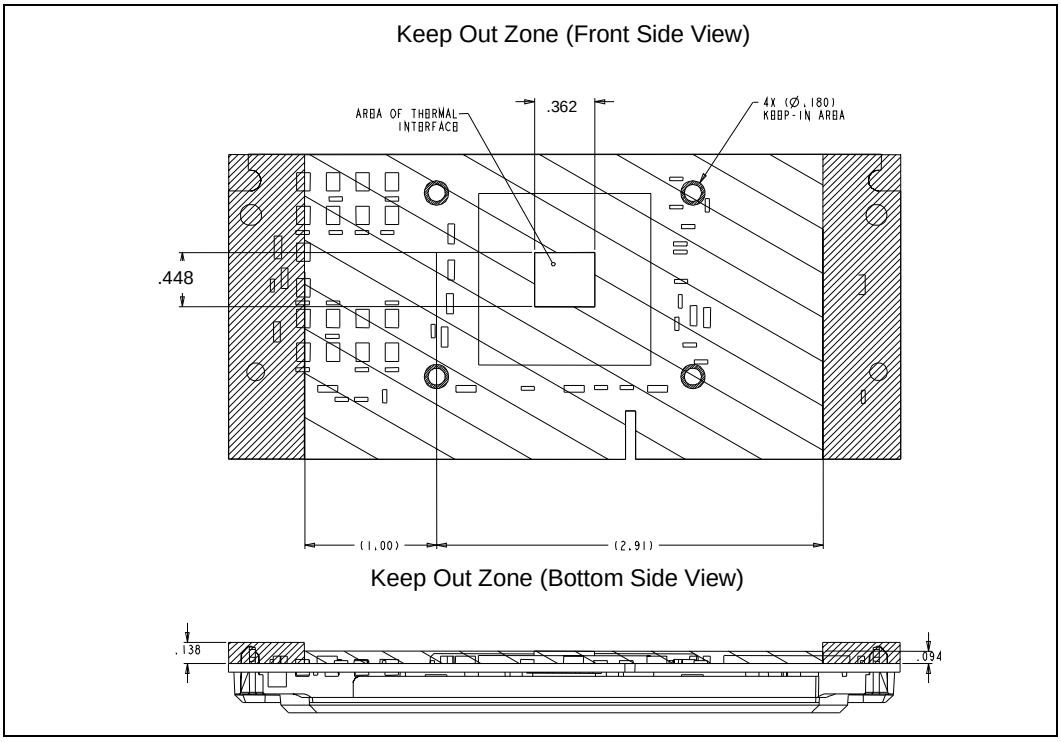

Downloaded from Arrow.com.

Figure 44. Intel® Pentium® III Processor Markings (S.E.C.C.2 Package)

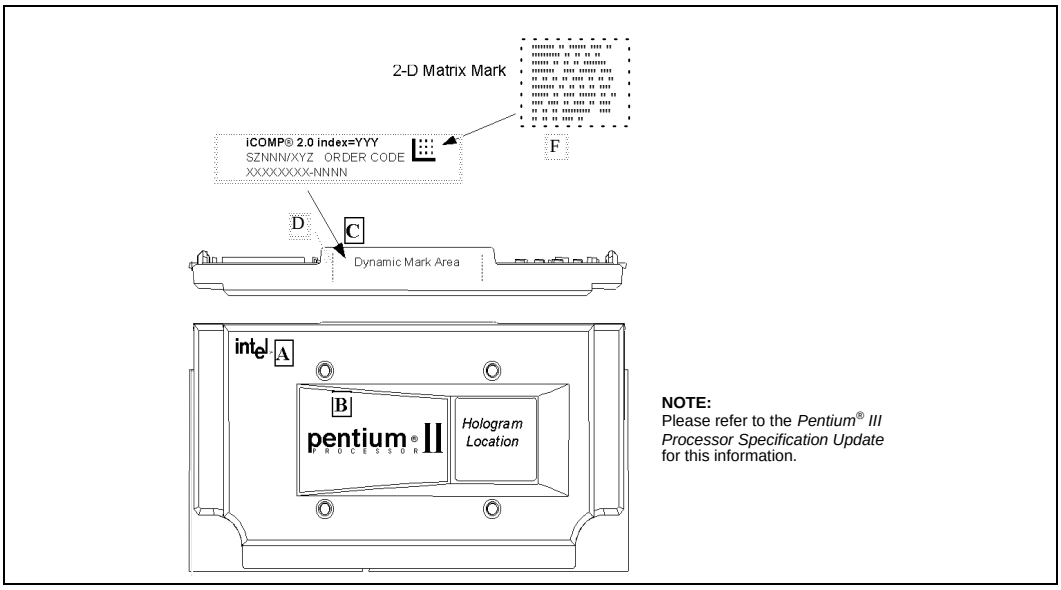

Table 30. Description Table for Processor Markings (S.E.C.C.2 Packaged Processor)

Code Letter	Description
A	Logo
C	Trademark
D	Logo
F	Dynamic Mark Area – with 2-D matrix

5.3 S.E.C.C.2 Structural Mechanical Specification

The intention of the structural specification for S.E.C.C.2 is to ensure that the package will not be exposed to excessive stresses that could adversely affect device reliability. Figure 45 illustrates the deflection specification for deflections away from the heatsink. Figure 46 illustrates the deflection specification in the direction of the heatsink.

The heatsink attach solution must not induce permanent stress into the S.E.C.C.2 substrate with the exception of a uniform load to maintain the heatsink to the processor thermal interface. Figure 47 and Table 31 define the pressure specification.

Figure 45. Substrate Deflection away from Heatsink

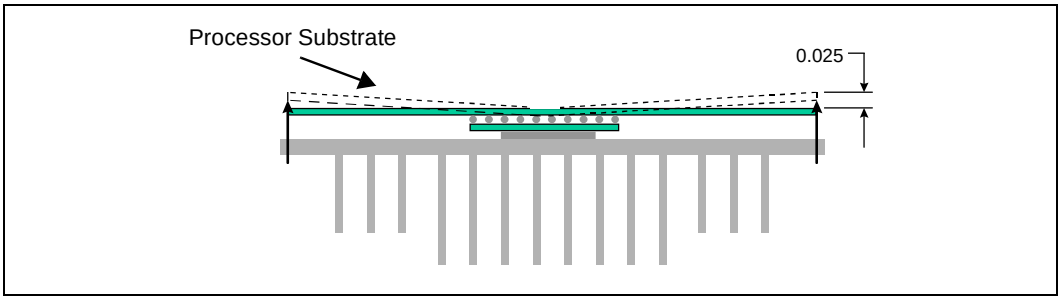

Downloaded from Arrow.com.

Figure 46. Substrate Deflection toward the Heatsink

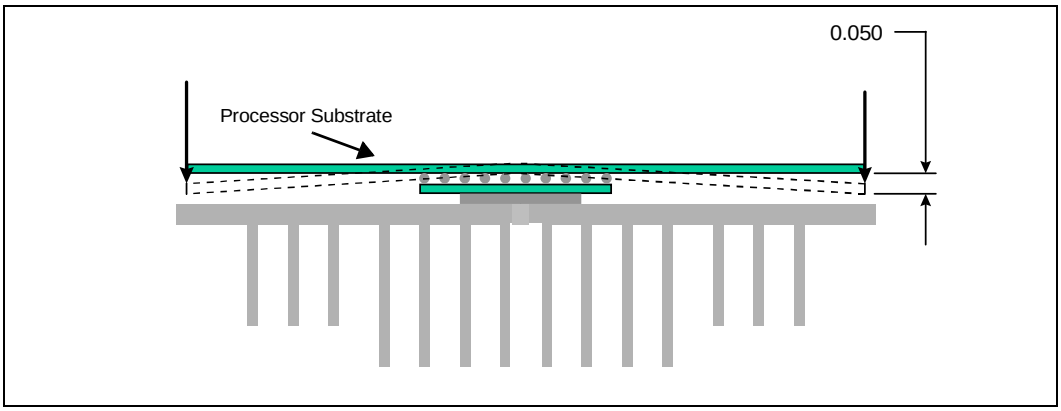

Figure 47. S.E.C.C.2 Packaged Processor Specifications

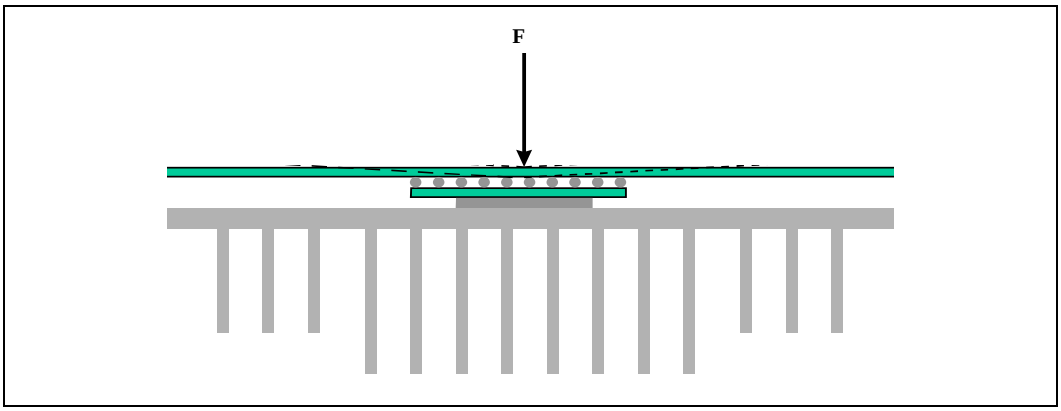

Table 31. S.E.C.C.2 Pressure Specifications

Parameter	Maximum	Unit	Figure	Notes
Static Compressive Force	50	lbf	47	1
Transient Compressive Force	100 75	lbf lbf	47 47	2 3

NOTES:
1. This is the maximum static force that can be applied by the heatsink to maintain the heatsink and processor interface.
2. This specification applies to a uniform load.
3. This specification applies to a nonuniform load.

Downloaded from Arrow.com.

5.4 Processor Package Materials Information

Both the S.E.C.C. and S.E.C.C.2 processor packages are comprised of multiple pieces to make the complete assembly. This section provides the weight of each piece and the entire package. Table 32 and Table 33 contain piece-part information of the S.E.C.C. and S.E.C.C.2 processor packages, respectively.

Table 32. S.E.C.C. Materials

S.E.C.C. Piece	Piece Material	Maximum Piece Weight (Grams)
Extended Thermal Plate	Aluminum 6063-T6	84.0
Latch Arms	GE Lexan 940-V0, 30% glass filled	Less than 2.0 per latch arm
Cover	GE Lexan 940-V0	24.0
Total Pentium III Processor		112.0

Table 33. S.E.C.C.2 Materials

S.E.C.C.2 Piece	Piece Material	Maximum Piece Weight (Grams)
Cover	GE Lexan 940-V0	18.0
Total Pentium III Processor		54.0

5.5 Intel® Pentium® III Processor Signal Listing

Table 34 and Table 35 provide the processor edge finger signal definitions. The signal locations on the SC242 edge connector are to be used for signal routing, simulation, and component placement on the baseboard.

Table 34 is the Pentium III processor substrate edge finger listing in order by pin number. Table 35 is the Pentium III processor substrate edge connector listing in order by signal name.

Downloaded from Arrow.com.

Table 34. Signal Listing in Order by Pin Number

Pin #	Pin Name	Signal Group	Pin #	Pin Name	Signal Group
A1	VTT	Power/Other	B1	EMI	Power/Other
A2	GND	Power/Other	B2	FLUSH#	CMOS Input
A3	VTT	Power/Other	B3	SMI#	CMOS Input
A4	IERR#	CMOS Output	B4	INIT#	CMOS Input
A5	A20M#	CMOS Input	B5	VTT	Power/Other
A6	GND	Power/Other	B6	STPCLK#	CMOS Input
A7	FERR#	CMOS Output	B7	TCK	TAP Input
A8	IGNNE#	CMOS Input	B8	SLP#	CMOS Input
A9	TDI	TAP Input	B9	VTT	Power/Other
A10	GND	Power/Other	B10	TMS	TAP Input
A11	TDO	TAP Output	B11	TRST#	TAP Input
A12	PWRGOOD	CMOS Input	B12	Reserved	Power/Other
A13	TESTHI	Power/Other	B13	VCC_{CORE}	Power/Other
A14	BSEL1	Power/Other	B14	THERMDP	Power/Other
A15	THERMTRIP#	CMOS Output	B15	THERMDN	Power/Other
A16	Reserved	Power/Other	B16	LINT1/NMI	CMOS Input
A17	LINT0/INTR	CMOS Input	B17	VCC_{CORE}	Power/Other
A18	GND	Power/Other	B18	PICCLK	APIC Clock
A19	PICD0	APIC I/O	B19	BP2#	AGTL+ I/O
A20	PREQ#	CMOS Input	B20	Reserved	Power/Other
A21	BP3#	AGTL+ I/O	B21	BSEL0	Power/Other
A22	GND	Power/Other	B22	PICD1	APIC I/O
A23	BPM0#	AGTL+ I/O	B23	PRDY#	AGTL+ Output
A24	BINIT#	AGTL+ I/O	B24	BPM1#	AGTL+ I/O
A25	DEP0#	AGTL+ I/O	B25	VCC_{CORE}	Power/Other
A26	GND	Power/Other	B26	DEP2#	AGTL+ I/O
A27	DEP1#	AGTL+ I/O	B27	DEP4#	AGTL+ I/O
A28	DEP3#	AGTL+ I/O	B28	DEP7#	AGTL+ I/O
A29	DEP5#	AGTL+ I/O	B29	VCC_{CORE}	Power/Other
A30	GND	Power/Other	B30	D62#	AGTL+ I/O
A31	DEP6#	AGTL+ I/O	B31	D58#	AGTL+ I/O
A32	D61#	AGTL+ I/O	B32	D63#	AGTL+ I/O
A33	D55#	AGTL+ I/O	B33	VCC_{CORE}	Power/Other
A34	GND	Power/Other	B34	D56#	AGTL+ I/O
A35	D60#	AGTL+ I/O	B35	D50#	AGTL+ I/O
A36	D53#	AGTL+ I/O	B36	D54#	AGTL+ I/O
A37	D57#	AGTL+ I/O	B37	VCC_{CORE}	Power/Other
A38	GND	Power/Other	B38	D59#	AGTL+ I/O
A39	D46#	AGTL+ I/O	B39	D48#	AGTL+ I/O
A40	D49#	AGTL+ I/O	B40	D52#	AGTL+ I/O
A41	D51#	AGTL+ I/O	B41	EMI	Power/Other

Downloaded from Arrow.com.

Table 34. Signal Listing in Order by Pin Number (Continued)

Pin #	Pin Name	Signal Group	Pin #	Pin Name	Signal Group
A42	GND	Power/Other	B42	D41#	AGTL+ I/O
A43	D42#	AGTL+ I/O	B43	D47#	AGTL+ I/O
A44	D45#	AGTL+ I/O	B44	D44#	AGTL+ I/O
A45	D39#	AGTL+ I/O	B45	VCC_{CORE}	Power/Other
A46	GND	Power/Other	B46	D36#	AGTL+ I/O
A47	Reserved	Power/Other	B47	D40#	AGTL+ I/O
A48	D43#	AGTL+I/O	B48	D34#	AGTL+ I/O
A49	D37#	AGTL+ I/O	B49	VCC_{CORE}	Power/Other
A50	GND	Power/Other	B50	D38#	AGTL+ I/O
A51	D33#	AGTL+ I/O	B51	D32#	AGTL+ I/O
A52	D35#	AGTL+ I/O	B52	D28#	AGTL+ I/O
A53	D31#	AGTL+ I/O	B53	VCC_{CORE}	Power/Other
A54	GND	Power/Other	B54	D29#	AGTL+ I/O
A55	D30#	AGTL+ I/O	B55	D26#	AGTL+ I/O
A56	D27#	AGTL+ I/O	B56	D25#	AGTL+ I/O
A57	D24#	AGTL+ I/O	B57	VCC_{CORE}	Power/Other
A58	GND	Power/Other	B58	D22#	AGTL+ I/O
A59	D23#	AGTL+ I/O	B59	D19#	AGTL+ I/O
A60	D21#	AGTL+ I/O	B60	D18#	AGTL+ I/O
A61	D16#	AGTL+ I/O	B61	EMI	Power/Other
A62	GND	Power/Other	B62	D20#	AGTL+ I/O
A63	D13#	AGTL+ I/O	B63	D17#	AGTL+ I/O
A64	D11#	AGTL+ I/O	B64	D15#	AGTL+ I/O
A65	D10#	AGTL+ I/O	B65	VCC_{CORE}	Power/Other
A66	GND	Power/Other	B66	D12#	AGTL+ I/O
A67	D14#	AGTL+ I/O	B67	D7#	AGTL+ I/O
A68	D9#	AGTL+ I/O	B68	D6#	AGTL+ I/O
A69	D8#	AGTL+ I/O	B69	VCC_{CORE}	Power/Other
A70	GND	Power/Other	B70	D4#	AGTL+ I/O
A71	D5#	AGTL+ I/O	B71	D2#	AGTL+ I/O
A72	D3#	AGTL+ I/O	B72	D0#	AGTL+ I/O
A73	D1#	AGTL+ I/O	B73	VCC_{CORE}	Power/Other
A74	GND	Power/Other	B74	RESET#	AGTL+ Input
A75	BCLK	System Bus	B75	BR1#	AGTL+ Input
A76	BR0#	AGTL+I/O	B76	Reserved	Power/Other.
A77	BERR#	AGTL+ I/O	B77	VCC_{CORE}	Power/Other
A78	GND	Power/Other	B78	A35#	AGTL+ I/O
A79	A33#	AGTL+ I/O	B79	A32#	AGTL+ I/O
A80	A34#	AGTL+ I/O	B80	A29#	AGTL+ I/O
A81	A30#	AGTL+ I/O	B81	EMI	Power/Other
A82	GND	Power/Other	B82	A26#	AGTL+ I/O
A83	A31#	AGTL+ I/O	B83	A24#	AGTL+ I/O

Downloaded from Arrow.com.

Table 34. Signal Listing in Order by Pin Number (Continued)

Pin #	Pin Name	Signal Group	Pin #	Pin Name	Signal Group
A84	A27#	AGTL+ I/O	B84	A28#	AGTL+ I/O
A85	A22#	AGTL+ I/O	B85	VCC_{CORE}	Power/Other
A86	GND	Power/Other	B86	A20#	AGTL+ I/O
A87	A23#	AGTL+ I/O	B87	A21#	AGTL+ I/O
A88	Reserved	Power/Other	B88	A25#	AGTL+ I/O
A89	A19#	AGTL+ I/O	B89	VCC_{CORE}	Power/Other
A90	GND	Power/Other	B90	A15#	AGTL+ I/O
A91	A18#	AGTL+ I/O	B91	A17#	AGTL+ I/O
A92	A16#	AGTL+ I/O	B92	A11#	AGTL+ I/O
A93	A13#	AGTL+ I/O	B93	VCC_{CORE}	Power/Other
A94	GND	Power/Other	B94	A12#	AGTL+ I/O
A95	A14#	AGTL+ I/O	B95	A8#	AGTL+ I/O
A96	A10#	AGTL+ I/O	B96	A7#	AGTL+ I/O
A97	A5#	AGTL+ I/O	B97	VCC_{CORE}	Power/Other
A98	GND	Power/Other	B98	A3#	AGTL+ I/O
A99	A9#	AGTL+ I/O	B99	A6#	AGTL+ I/O
A100	A4#	AGTL+ I/O	B100	EMI	Power/Other
A101	BNR#	AGTL+ I/O	B101	SLOTOCC#	Power/Other
A102	GND	Power/Other	B102	REQ0#	AGTL+ I/O
A103	BPRI#	AGTL+ Input	B103	REQ1#	AGTL+ I/O
A104	TRDY#	AGTL+ Input	B104	REQ4#	AGTL+ I/O
A105	DEFER#	AGTL+ Input	B105	VCC_{CORE}	Power/Other
A106	GND	Power/Other	B106	LOCK#	AGTL+ I/O
A107	REQ2#	AGTL+ I/O	B107	DRDY#	AGTL+ I/O
A108	REQ3#	AGTL+ I/O	B108	RS0#	AGTL+ Input
A109	HITM#	AGTL+ I/O	B109	VCC_5	Power/Other
A110	GND	Power/Other	B110	HIT#	AGTL+ I/O
A111	DBSY#	AGTL+ I/O	B111	RS2#	AGTL+ Input
A112	RS1#	AGTL+ Input	B112	Reserved	Power/Other
A113	Reserved	Power/Other	B113	$VCC_{L2}/VCC_{3.3}$	Power/Other
A114	GND	Power/Other	B114	RP#	AGTL+ I/O
A115	ADS#	AGTL+ I/O	B115	RSP#	AGTL+ Input
A116	Reserved	Power/Other	B116	AP1#	AGTL+ I/O
A117	AP0#	AGTL+ I/O	B117	$VCC_{L2}/VCC_{3.3}$	Power/Other
A118	GND	Power/Other	B118	AERR#	AGTL+ I/O
A119	VID2	Power/Other	B119	VID3	Power/Other
A120	VID1	Power/Other	B120	VID0	Power/Other
A121	VID4	Power/Other	B121	$VCC_{L2}/VCC_{3.3}$	Power/Other

Downloaded from Arrow.com.

Table 35. Signal Listing in Order by Signal Name

Pin Name	Pin #	Signal Group
A3#	B98	AGTL+ I/O
A4#	A100	AGTL+ I/O
A5#	A97	AGTL+ I/O
A6#	B99	AGTL+ I/O
A7#	B96	AGTL+ I/O
A8#	B95	AGTL+ I/O
A9#	A99	AGTL+ I/O
A10#	A96	AGTL+ I/O
A11#	B92	AGTL+ I/O
A12#	B94	AGTL+ I/O
A13#	A93	AGTL+ I/O
A14#	A95	AGTL+ I/O
A15#	B90	AGTL+ I/O
A16#	A92	AGTL+ I/O
A17#	B91	AGTL+ I/O
A18#	A91	AGTL+ I/O
A19#	A89	AGTL+ I/O
A20#	B86	AGTL+ I/O
A20M#	A5	CMOS Input
A21#	B87	AGTL+ I/O
A22#	A85	AGTL+ I/O
A23#	A87	AGTL+ I/O
A24#	B83	AGTL+ I/O
A25#	B88	AGTL+ I/O
A26#	B82	AGTL+ I/O
A27#	A84	AGTL+ I/O
A28#	B84	AGTL+ I/O
A29#	B80	AGTL+ I/O
A30#	A81	AGTL+ I/O
A31#	A83	AGTL+ I/O
A32#	B79	AGTL+ I/O
A33#	A79	AGTL+ I/O
A34#	A80	AGTL+ I/O
A35#	B78	AGTL+ I/O
ADS#	A115	AGTL+ I/O
AERR#	B118	AGTL+ I/O
AP0#	A117	AGTL+ I/O
AP1#	B116	AGTL+ I/O
BCLK	A75	System Bus
BERR#	A77	AGTL+ I/O
BINIT#	A24	AGTL+ I/O

Table 35. Signal Listing in Order by Signal Name (Continued)

Pin Name	Pin #	Signal Group
BNR#	A101	AGTL+ I/O
BP2#	B19	AGTL+ I/O
BP3#	A21	AGTL+ I/O
BPM0#	A23	AGTL+ I/O
BPM1#	B24	AGTL+ I/O
BPRI#	A103	AGTL+ Input
BR0#	A76	AGTL+I/O
BR1#	B75	AGTL+ Input
BSEL0	B21	Power/Other
BSEL1	A14	Power/Other
D0#	B72	AGTL+ I/O
D1#	A73	AGTL+ I/O
D2#	B71	AGTL+ I/O
D3#	A72	AGTL+ I/O
D4#	B70	AGTL+ I/O
D5#	A71	AGTL+ I/O
D6#	B68	AGTL+ I/O
D7#	B67	AGTL+ I/O
D8#	A69	AGTL+ I/O
D9#	A68	AGTL+ I/O
D10#	A65	AGTL+ I/O
D11#	A64	AGTL+ I/O
D12#	B66	AGTL+ I/O
D13#	A63	AGTL+ I/O
D14#	A67	AGTL+ I/O
D15#	B64	AGTL+ I/O
D16#	A61	AGTL+ I/O
D17#	B63	AGTL+ I/O
D18#	B60	AGTL+ I/O
D19#	B59	AGTL+ I/O
D20#	B62	AGTL+ I/O
D21#	A60	AGTL+ I/O
D22#	B58	AGTL+ I/O
D23#	A59	AGTL+ I/O
D24#	A57	AGTL+ I/O
D25#	B56	AGTL+ I/O
D26#	B55	AGTL+ I/O
D27#	A56	AGTL+ I/O
D28#	B52	AGTL+ I/O
D29#	B54	AGTL+ I/O
D30#	A55	AGTL+ I/O

Downloaded from Arrow.com.

Table 35. Signal Listing in Order by Signal Name (Continued)

Pin Name	Pin #	Signal Group
D31#	A53	AGTL+ I/O
D32#	B51	AGTL+ I/O
D33#	A51	AGTL+ I/O
D34#	B48	AGTL+ I/O
D35#	A52	AGTL+ I/O
D36#	B46	AGTL+ I/O
D37#	A49	AGTL+ I/O
D38#	B50	AGTL+ I/O
D39#	A45	AGTL+ I/O
D40#	B47	AGTL+ I/O
D41#	B42	AGTL+ I/O
D42#	A43	AGTL+ I/O
D43#	A48	AGTL+I/O
D44#	B44	AGTL+ I/O
D45#	A44	AGTL+ I/O
D46#	A39	AGTL+ I/O
D47#	B43	AGTL+ I/O
D48#	B39	AGTL+ I/O
D49#	A40	AGTL+ I/O
D50#	B35	AGTL+ I/O
D51#	A41	AGTL+ I/O
D52#	B40	AGTL+ I/O
D53#	A36	AGTL+ I/O
D54#	B36	AGTL+ I/O
D55#	A33	AGTL+ I/O
D56#	B34	AGTL+ I/O
D57#	A37	AGTL+ I/O
D58#	B31	AGTL+ I/O
D59#	B38	AGTL+ I/O
D60#	A35	AGTL+ I/O
D61#	A32	AGTL+ I/O
D62#	B30	AGTL+ I/O
D63#	B32	AGTL+ I/O
DBSY#	A111	AGTL+ I/O
DEFER#	A105	AGTL+ Input
DEP0#	A25	AGTL+ I/O
DEP1#	A27	AGTL+ I/O
DEP2#	B26	AGTL+ I/O
DEP3#	A28	AGTL+ I/O
DEP4#	B27	AGTL+ I/O
DEP5#	A29	AGTL+ I/O

Table 35. Signal Listing in Order by Signal Name (Continued)

Pin Name	Pin #	Signal Group
DEP6#	A31	AGTL+ I/O
DEP7#	B28	AGTL+ I/O
DRDY#	B107	AGTL+ I/O
EMI	B1	Power/Other
EMI	B41	Power/Other
EMI	B61	Power/Other
EMI	B81	Power/Other
EMI	B100	Power/Other
FERR#	A7	CMOS Output
FLUSH#	B2	CMOS Input
GND	A2	Power/Other
GND	A6	Power/Other
GND	A10	Power/Other
GND	A18	Power/Other
GND	A22	Power/Other
GND	A26	Power/Other
GND	A30	Power/Other
GND	A34	Power/Other
GND	A38	Power/Other
GND	A42	Power/Other
GND	A46	Power/Other
GND	A50	Power/Other
GND	A54	Power/Other
GND	A58	Power/Other
GND	A62	Power/Other
GND	A66	Power/Other
GND	A70	Power/Other
GND	A74	Power/Other
GND	A78	Power/Other
GND	A82	Power/Other
GND	A86	Power/Other
GND	A90	Power/Other
GND	A94	Power/Other
GND	A98	Power/Other
GND	A102	Power/Other
GND	A106	Power/Other
GND	A110	Power/Other
GND	A114	Power/Other
GND	A118	Power/Other
HIT#	B110	AGTL+ I/O
HITM#	A109	AGTL+ I/O

Downloaded from Arrow.com.

Table 35. Signal Listing in Order by Signal Name (Continued)

Pin Name	Pin #	Signal Group
IERR#	A4	CMOS Output
IGNNE#	A8	CMOS Input
INIT#	B4	CMOS Input
LINT0/INTR	A17	CMOS Input
LINT1/NMI	B16	CMOS Input
LOCK#	B106	AGTL+ I/O
PICCLK	B18	APIC Clock
PICD0	A19	APIC I/O
PICD1	B22	APIC I/O
PRDY#	B23	AGTL+ Output
PREQ#	A20	CMOS Input
PWRGOOD	A12	CMOS Input
REQ0#	B102	AGTL+ I/O
REQ1#	B103	AGTL+ I/O
REQ2#	A107	AGTL+ I/O
REQ3#	A108	AGTL+ I/O
REQ4#	B104	AGTL+ I/O
Reserved	A16	Power/Other
Reserved	A47	Power/Other
Reserved	A88	Power/Other
Reserved	A113	Power/Other
Reserved	A116	Power/Other
Reserved	B12	Power/Other
Reserved	B20	Power/Other
Reserved	B76	Power/Other.
Reserved	B112	Power/Other
RESET#	B74	AGTL+ Input
RP#	B114	AGTL+ I/O
RS0#	B108	AGTL+ Input
RS1#	A112	AGTL+ Input
RS2#	B111	AGTL+ Input
RSP#	B115	AGTL+ Input
SLOTOCC#	B101	Power/Other
SLP#	B8	CMOS Input
SMI#	B3	CMOS Input
STPCLK#	B6	CMOS Input
TCK	B7	TAP Input
TDI	A9	TAP Input
TDO	A11	TAP Output
TESTHI	A13	Power/Other
THERMDN	B15	Power/Other

Table 35. Signal Listing in Order by Signal Name (Continued)

Pin Name	Pin #	Signal Group
THERMDP	B14	Power/Other
THERMTRIP#	A15	CMOS Output
TMS	B10	TAP Input
TRDY#	A104	AGTL+ Input
TRST#	B11	TAP Input
VCC_5	B109	Power/Other
VCC_{CORE}	B13	Power/Other
VCC_{CORE}	B17	Power/Other
VCC_{CORE}	B25	Power/Other
VCC_{CORE}	B29	Power/Other
VCC_{CORE}	B33	Power/Other
VCC_{CORE}	B37	Power/Other
VCC_{CORE}	B45	Power/Other
VCC_{CORE}	B49	Power/Other
VCC_{CORE}	B53	Power/Other
VCC_{CORE}	B57	Power/Other
VCC_{CORE}	B65	Power/Other
VCC_{CORE}	B69	Power/Other
VCC_{CORE}	B73	Power/Other
VCC_{CORE}	B77	Power/Other
VCC_{CORE}	B85	Power/Other
VCC_{CORE}	B89	Power/Other
VCC_{CORE}	B93	Power/Other
VCC_{CORE}	B97	Power/Other
VCC_{CORE}	B105	Power/Other
VCC_{L2}	B113	Power/Other
VCC_{L2}	B117	Power/Other
VCC_{L2}	B121	Power/Other
VID0	B120	Power/Other
VID1	A120	Power/Other
VID2	A119	Power/Other
VID3	B119	Power/Other
VID4	A121	Power/Other
V_{TT}	A1	Power/Other
V_{TT}	A3	Power/Other
V_{TT}	B5	Power/Other
V_{TT}	B9	Power/Other

Downloaded from Arrow.com.

5.6 Intel® Pentium® III Processor Core Pad to Substrate Via Assignments

These test points are the closest locations to the processor core die pad and should be used to validate processor core timings and signal quality on the back of the S.E.C.C. or the S.E.C.C.2 package. See the SECC Disassembly Process Application Note for the instructions on removing the cover of the SECC package.

5.6.1 Processor Core Pad Via Assignments (CPUID=067xh)

Figure 48 shows the via locations on the back of the processor substrate.

Figure 48. Processor Core Pad Via Assignments

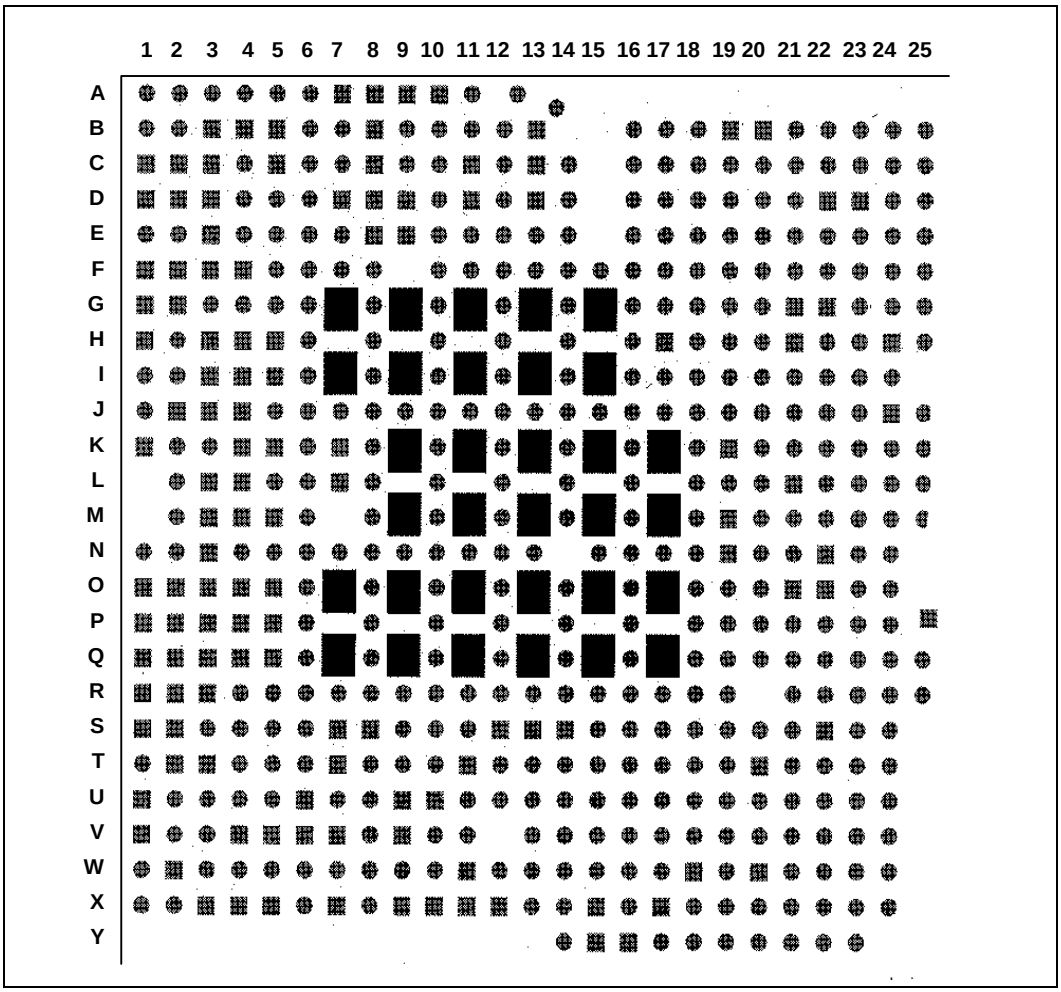

5.6.2 Processor Core Signal Assignments (CPUID=067xh)

Table 36 and Table 37 shows the signal to via and the via to signal assignments, respectively.

Downloaded from Arrow.com.

Table 36. Via Listing in Order by Signal Name

Signal Name	Via Locations
A3#	S18
A4#	W18
A5#	T18
A6#	U18
A7#	Y19
A8#	W19
A9#	V18
A10#	V19
A11#	W20
A12#	X20
A13#	V20
A14#	Y20
A15#	T21
A16#	W21
A17#	V21
A18#	Y21
A19#	W23
A20#	V24
A20M#	P23
A21#	V23
A22#	T22
A23#	U22
A24#	T24
A25#	S20
A26#	S23
A27#	T23
A28#	U23
A29#	R21
A30#	S22
A31#	S21
A32#	R24
A33#	Q20
A34#	R23
A35#	Q21
ADS#	X21
AERR#	X13
AP0#	S16
AP1#	X15

Table 36. Via Listing in Order by Signal Name (Continued)

Signal Name	Via Locations
BCLK	R6
BERR#	Q23
BINT#	G17
BNR#	S17
BP2#	C16
BP3#	G16
BPM0#	B17
BPM1#	E17
BPRI#	T15
BR0#	V14
BR1#	T16
BSEL0	N23
BSEL1	V2
D0#	M21
D1#	M22
D2#	M19
D3#	M24
D4#	L23
D5#	M20
D6#	L20
D7#	L19
D8#	L22
D9#	L21
D10#	K23
D11#	K20
D12#	K24
D13#	K19
D14#	K25
D15#	K22
D16#	J24
D17#	J25
D18#	J21
D19#	I22
D20#	J23
D21#	J22
D22#	I23
D23#	K21
D24#	J20

Downloaded from Arrow.com.

Table 36. Via Listing in Order by Signal Name (Continued)

Signal Name	Via Locations
D25#	I24
D26#	H23
D27#	H22
D28#	H20
D29#	I21
D30#	I19
D31#	H24
D32#	H21
D33#	G24
D34#	E25
D35#	G23
D36#	F23
D37#	F21
D38#	G25
D39#	E24
D40#	D25
D41#	C24
D42#	C23
D43#	G22
D44#	F24
D45#	D23
D46#	D22
D47#	E23
D48#	E22
D49#	B22
D50#	H19
D51#	D21
D52#	D24
D53#	C21
D54#	E21
D55#	B20
D56#	C19
D57#	B21
D58#	E19
D59#	E20
D60#	G19
D61#	F19
D62#	D20

Table 36. Via Listing in Order by Signal Name (Continued)

Signal Name	Via Locations
D63#	D19
DBSY#	Y14
DEFER#	X17
DEP0#	H17
DEP1#	D18
DEP2#	C18
DEP3#	G18
DEP4#	E18
DEP5#	H18
DEP6#	B19
DEP7#	F18
DRDY#	Y16
FERR#	P25
FLUSH#	O19
HIT#	V13
HITM#	W14
IERR#	Q25
IGNNE#	O21
INIT#	P22
LINT[0]	F15
LINT[1]	E14
LOCK#	V15
PICCLK	B16
PICD[0]	D16
PICD[1]	H16
PRDY#	D17
PREQ#	E16
PWRGOOD	N21
REQ0#	U17
REQ1#	Y17
REQ2#	S15
REQ3#	W15
REQ4#	W16
RESET#	P21
RP#	S14
RS0#	W13
RS1#	S13
RS2#	T13

Downloaded from Arrow.com.

Table 36. Via Listing in Order by Signal Name (Continued)

Signal Name	Via Locations
RSP#	V16
SLP#	O22
SMI#	Q24
STPCLK#	P24
TCK	O20
TDI	O23
TDO	N19
THERMTRIP#	M23
THRMDN	N24
THRMDP	M25
TMS	O24
TRDY#	X18
TRST#	N20
VCC_{CORE}	A2
VCC_{CORE}	A4
VCC_{CORE}	B1
VCC_{CORE}	B2
VCC_{CORE}	B6
VCC_{CORE}	B9
VCC_{CORE}	B25
VCC_{CORE}	C14
VCC_{CORE}	D5
VCC_{CORE}	E1
VCC_{CORE}	E4
VCC_{CORE}	E6
VCC_{CORE}	E10
VCC_{CORE}	E12
VCC_{CORE}	F14
VCC_{CORE}	G3
VCC_{CORE}	G8
VCC_{CORE}	G10
VCC_{CORE}	G12
VCC_{CORE}	G14
VCC_{CORE}	H2
VCC_{CORE}	H8
VCC_{CORE}	H10
VCC_{CORE}	H25
VCC_{CORE}	I17

Table 36. Via Listing in Order by Signal Name (Continued)

Signal Name	Via Locations
VCC_{CORE}	J1
VCC_{CORE}	J5
VCC_{CORE}	J8
VCC_{CORE}	J10
VCC_{CORE}	J12
VCC_{CORE}	J14
VCC_{CORE}	J16
VCC_{CORE}	K2
VCC_{CORE}	L8
VCC_{CORE}	L10
VCC_{CORE}	L12
VCC_{CORE}	L14
VCC_{CORE}	L16
VCC_{CORE}	M2
VCC_{CORE}	N2
VCC_{CORE}	N4
VCC_{CORE}	N6
VCC_{CORE}	N8
VCC_{CORE}	N10
VCC_{CORE}	N12
VCC_{CORE}	N16
VCC_{CORE}	P8
VCC_{CORE}	P10
VCC_{CORE}	P12
VCC_{CORE}	P14
VCC_{CORE}	P16
VCC_{CORE}	Q22
VCC_{CORE}	R5
VCC_{CORE}	R7
VCC_{CORE}	R8
VCC_{CORE}	R10
VCC_{CORE}	R12
VCC_{CORE}	R14
VCC_{CORE}	R16
VCC_{CORE}	R18
VCC_{CORE}	S19
VCC_{CORE}	S24
VCC_{CORE}	T4

Downloaded from Arrow.com.

Table 36. Via Listing in Order by Signal Name (Continued)

Signal Name	Via Locations
VCC_{CORE}	T5
VCC_{CORE}	T9
VCC_{CORE}	T12
VCC_{CORE}	T19
VCC_{CORE}	U2
VCC_{CORE}	U14
VCC_{CORE}	W1
VCC_{CORE}	W6
VCC_{CORE}	W9
VCC_{CORE}	W24
VCC_{CORE}	X2
VCC_{CORE}	X14
VCC_{CORE}	Y22
VCC_{CORE}	Y23
VSS	X24
VSS	U3
VSS	U4
VSS	A1
VSS	A3
VSS	B11
VSS	B24
VSS	C17
VSS	C20
VSS	C22
VSS	C25
VSS	D4
VSS	D6
VSS	F6
VSS	F10
VSS	F17
VSS	F20
VSS	F22
VSS	F25
VSS	G4
VSS	I1
VSS	I2
VSS	I8
VSS	I10

Table 36. Via Listing in Order by Signal Name (Continued)

Signal Name	Via Locations
VSS	I12
VSS	I14
VSS	I16
VSS	I18
VSS	I20
VSS	J6
VSS	J7
VSS	J9
VSS	J11
VSS	J13
VSS	J15
VSS	J17
VSS	J18
VSS	K6
VSS	K8
VSS	K10
VSS	K12
VSS	K14
VSS	K16
VSS	K18
VSS	L2
VSS	L18
VSS	L25
VSS	M6
VSS	M8
VSS	M10
VSS	M12
VSS	M14
VSS	M16
VSS	M18
VSS	N1
VSS	N18
VSS	O8
VSS	O10
VSS	O12
VSS	O14
VSS	O16
VSS	P18

Downloaded from Arrow.com.

Table 36. Via Listing in Order by Signal Name (Continued)

Signal Name	Via Locations
Vss	Q8
Vss	Q10
Vss	Q12
Vss	Q14
Vss	Q16
Vss	Q18
Vss	R4
Vss	R9
Vss	R11
Vss	R13
Vss	R15
Vss	R17
Vss	R19
Vss	R22
Vss	R25
Vss	S3
Vss	S4

Table 36. Via Listing in Order by Signal Name (Continued)

Signal Name	Via Locations
Vss	S5
Vss	U13
Vss	U16
Vss	U19
Vss	U20
Vss	U21
Vss	U24
Vss	V22
Vss	W17
Vss	W22
Vss	X1
Vss	X7
Vss	X16
Vss	X19
Vss	X22
Vss	X23

Downloaded from Arrow.com.

Table 37. Via Listing in Order by VIA Location

Via Locations	Signal Name
A1	V_{SS}
A2	$V_{CC_{CORE}}$
A3	V_{SS}
A4	$V_{CC_{CORE}}$
B1	$V_{CC_{CORE}}$
B2	$V_{CC_{CORE}}$
B6	$V_{CC_{CORE}}$
B9	$V_{CC_{CORE}}$
B11	V_{SS}
B16	PICCLK
B17	BPM0#
B19	DEP6#
B20	D55#
B21	D57#
B22	D49#
B24	V_{SS}
B25	$V_{CC_{CORE}}$
C14	$V_{CC_{CORE}}$
C16	BP2#
C17	V_{SS}
C18	DEP2#
C19	D56#
C20	V_{SS}
C21	D53#
C22	V_{SS}
C23	D42#
C24	D41#
C25	V_{SS}
D4	V_{SS}
D5	$V_{CC_{CORE}}$
D6	V_{SS}
D16	PICD[0]
D17	PRDY#
D18	DEP1#
D19	D63#
D20	D62#
D21	D51#
D22	D46#

Table 37. Via Listing in Order by VIA Location (Continued)

Via Locations	Signal Name
D23	D45#
D24	D52#
D25	D40#
E1	$V_{CC_{CORE}}$
E4	$V_{CC_{CORE}}$
E6	$V_{CC_{CORE}}$
E10	$V_{CC_{CORE}}$
E12	$V_{CC_{CORE}}$
E14	LINT[1]
E16	PREQ#
E17	BPM1#
E18	DEP4#
E19	D58#
E20	D59#
E21	D54#
E22	D48#
E23	D47#
E24	D39#
E25	D34#
F6	V_{SS}
F10	V_{SS}
F14	$V_{CC_{CORE}}$
F15	LINT[0]
F17	V_{SS}
F18	DEP7#
F19	D61#
F20	V_{SS}
F21	D37#
F22	V_{SS}
F23	D36#
F24	D44#
F25	V_{SS}
G3	$V_{CC_{CORE}}$
G4	V_{SS}
G8	$V_{CC_{CORE}}$
G10	$V_{CC_{CORE}}$
G12	$V_{CC_{CORE}}$
G14	$V_{CC_{CORE}}$

Downloaded from Arrow.com.

Table 37. Via Listing in Order by VIA Location (Continued)

Via Locations	Signal Name
G16	BP3#
G17	BINT#
G18	DEP3#
G19	D60#
G22	D43#
G23	D35#
G24	D33#
G25	D38#
H2	VCC_{CORE}
H8	VCC_{CORE}
H10	VCC_{CORE}
H16	PICD[1]
H17	DEP0#
H18	DEP5#
H19	D50#
H20	D28#
H21	D32#
H22	D27#
H23	D26#
H24	D31#
H25	VCC_{CORE}
I1	V_{SS}
I2	V_{SS}
I8	V_{SS}
I10	V_{SS}
I12	V_{SS}
I14	V_{SS}
I16	V_{SS}
I17	VCC_{CORE}
I18	V_{SS}
I19	D30#
I20	V_{SS}
I21	D29#
I22	D19#
I23	D22#
I24	D25#
J1	VCC_{CORE}
J5	VCC_{CORE}

Table 37. Via Listing in Order by VIA Location (Continued)

Via Locations	Signal Name
J6	V_{SS}
J7	V_{SS}
J8	VCC_{CORE}
J9	V_{SS}
J10	VCC_{CORE}
J11	V_{SS}
J12	VCC_{CORE}
J13	V_{SS}
J14	VCC_{CORE}
J15	V_{SS}
J16	VCC_{CORE}
J17	V_{SS}
J18	V_{SS}
J20	D24#
J21	D18#
J22	D21#
J23	D20#
J24	D16#
J25	D17#
K2	VCC_{CORE}
K6	V_{SS}
K8	V_{SS}
K10	V_{SS}
K12	V_{SS}
K14	V_{SS}
K16	V_{SS}
K18	V_{SS}
K19	D13#
K20	D11#
K21	D23#
K22	D15#
K23	D10#
K24	D12#
K25	D14#
L02	V_{SS}
L08	VCC_{CORE}
L10	VCC_{CORE}
L12	VCC_{CORE}

Downloaded from Arrow.com.

Table 37. Via Listing in Order by VIA Location (Continued)

Via Locations	Signal Name
L14	VCC_{CORE}
L16	VCC_{CORE}
L18	VSS
L19	D7#
L20	D6#
L21	D9#
L22	D8#
L23	D4#
L25	VSS
M2	VCC_{CORE}
M6	VSS
M8	VSS
M10	VSS
M12	VSS
M14	VSS
M16	VSS
M18	VSS
M19	D2#
M20	D5#
M21	D0#
M22	D1#
M23	THERMTRIP#
M24	D3#
M25	THRMDP
N1	VSS
N2	VCC_{CORE}
N4	VCC_{CORE}
N6	VCC_{CORE}
N8	VCC_{CORE}
N10	VCC_{CORE}
N12	VCC_{CORE}
N16	VCC_{CORE}
N18	VSS
N19	TDO
N20	TRST#
N21	PWRGOOD
N23	BSEL0
N24	THRMDN

Table 37. Via Listing in Order by VIA Location (Continued)

Via Locations	Signal Name
O8	VSS
O10	VSS
O12	VSS
O14	VSS
O16	VSS
O19	FLUSH#
O20	TCK
O21	IGNNE#
O22	SLP#
O23	TDI
O24	TMS
P8	VCC_{CORE}
P10	VCC_{CORE}
P12	VCC_{CORE}
P14	VCC_{CORE}
P16	VCC_{CORE}
P18	VSS
P21	RESET#
P22	INIT#
P23	A20M#
P24	STPCLK#
P25	FERR#
Q8	VSS
Q10	VSS
Q12	VSS
Q14	VSS
Q16	VSS
Q18	VSS
Q20	A33#
Q21	A35#
Q22	VCC_{CORE}
Q23	BERR#
Q24	SMI#
Q25	IERR#
R4	VSS
R5	VCC_{CORE}
R6	BCLK
R7	VCC_{CORE}

Downloaded from Arrow.com.

Table 37. Via Listing in Order by VIA Location (Continued)

Via Locations	Signal Name
R8	VCC_{CORE}
R9	VSS
R10	VCC_{CORE}
R11	VSS
R12	VCC_{CORE}
R13	VSS
R14	VCC_{CORE}
R15	VSS
R16	VCC_{CORE}
R17	VSS
R18	VCC_{CORE}
R19	VSS
R21	A29#
R22	VSS
R23	A34#
R24	A32#
R25	VSS
S3	VSS
S4	VSS
S5	VSS
S13	RS1#
S14	RP#
S15	REQ2#
S16	AP0#
S17	BNR#
S18	A3#
S19	VCC_{CORE}
S20	A25#
S21	A31#
S22	A30#
S23	A26#
S24	VCC_{CORE}
T4	VCC_{CORE}
T5	VCC_{CORE}
T9	VCC_{CORE}
T12	VCC_{CORE}
T13	RS2#
T15	BPRI#

Table 37. Via Listing in Order by VIA Location (Continued)

Via Locations	Signal Name
T16	BR1#
T18	A5#
T19	VCC_{CORE}
T21	A15#
T22	A22#
T23	A27#
T24	A24#
U02	VCC_{CORE}
U03	VSS
U04	VSS
U13	VSS
U14	VCC_{CORE}
U16	VSS
U17	REQ0#
U18	A6#
U19	VSS
U20	VSS
U21	VSS
U22	A23#
U23	A28#
U24	VSS
V2	BSEL1
V13	HIT#
V14	BR0#
V15	LOCK#
V16	RSP#
V18	A9#
V19	A10#
V20	A13#
V21	A17#
V22	VSS
V23	A21#
V24	A20#
W1	VCC_{CORE}
W6	VCC_{CORE}
W9	VCC_{CORE}
W13	RS0#
W14	HITM#

Downloaded from Arrow.com.

Table 37. Via Listing in Order by VIA Location (Continued)

Via Locations	Signal Name
W15	REQ3#
W16	REQ4#
W17	V_{SS}
W18	A4#
W19	A8#
W20	A11#
W21	A16#
W22	V_{SS}
W23	A19#
W24	$V_{CC_{CORE}}$
X01	V_{SS}
X02	$V_{CC_{CORE}}$
X07	V_{SS}
X13	AERR#
X14	$V_{CC_{CORE}}$
X15	AP1#
X16	V_{SS}

Table 37. Via Listing in Order by VIA Location (Continued)

Via Locations	Signal Name
X17	DEFER#
X18	TRDY#
X19	V_{SS}
X20	A12#
X21	ADS#
X22	V_{SS}
X23	V_{SS}
X24	V_{SS}
Y14	DBSY#
Y16	DRDY#
Y17	REQ1#
Y19	A7#
Y20	A14#
Y21	A18#
Y22	$V_{CC_{CORE}}$
Y23	$V_{CC_{CORE}}$

Downloaded from Arrow.com.

5.6.3 Processor Core Pad Via Assignments (CPUID=068xh)

Figure 49 shows the via locations on the back of the processor substrate.

Figure 49. Intel® Pentium® III Processor S.E.C.C. 2 Via Map

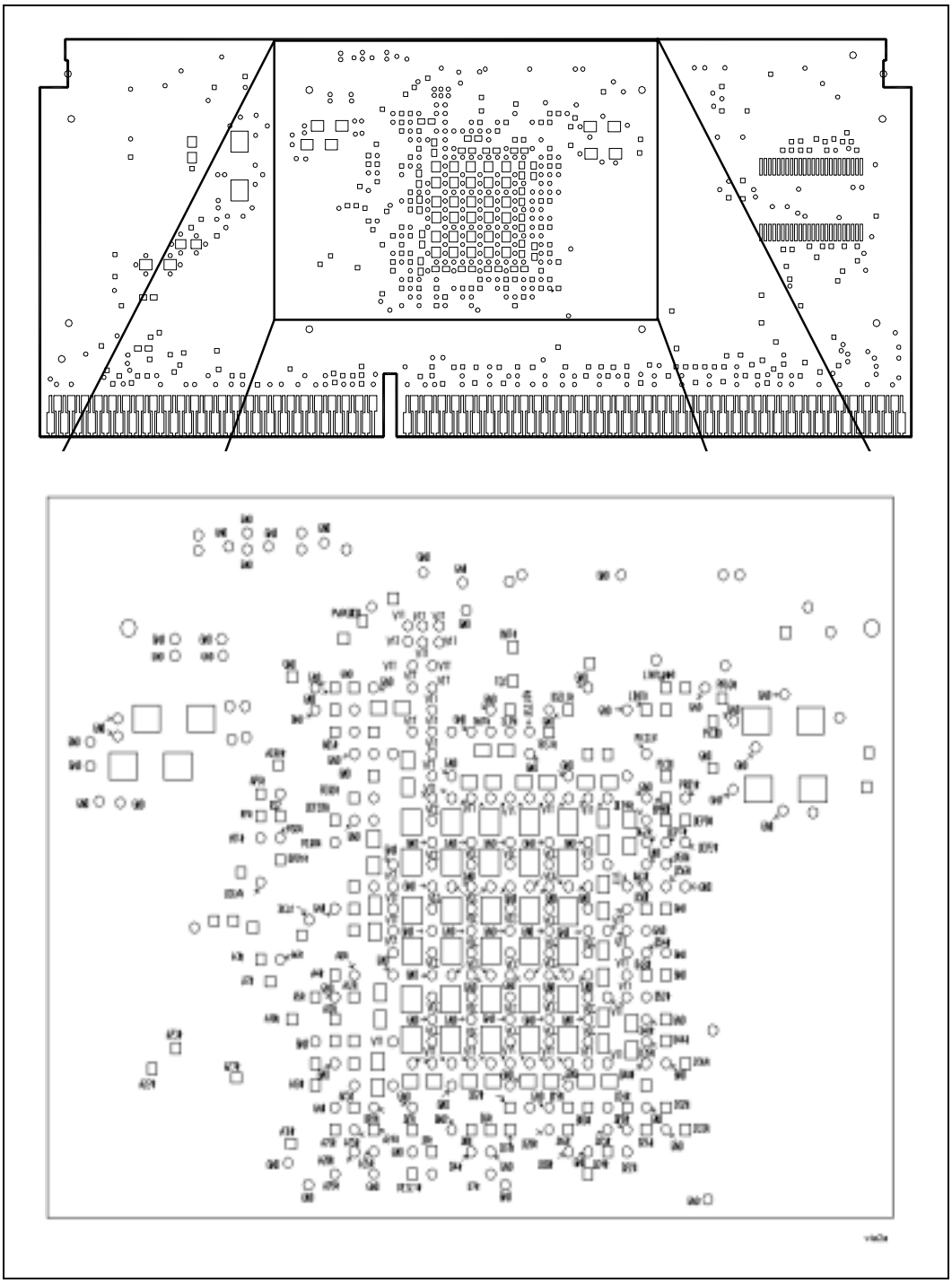

Downloaded from Arrow.com.

6.0 Boxed Processor Specifications

6.1 Introduction

The Pentium III processor is also offered as an Intel boxed processor. Intel boxed processors are intended for system integrators who build systems from baseboards and components. Boxed Pentium III processors are supplied with an attached fan heatsink. This section documents baseboard and system requirements for the fan heatsink that will be supplied with the boxed Pentium III processor. This section is particularly important for original equipment manufacturer's (OEMs) that manufacture baseboards for system integrators. Unless otherwise noted, all figures in this section are dimensioned in inches. Figure 50 shows a mechanical representation of a boxed Pentium III processor in the S.E.C.C.2 package. Boxed Pentium III processors are not available in the S.E.C.C. package.

Note: The airflow of the fan heatsink is into the center and out of the sides of the fan heatsink.

Figure 50. Boxed Intel® Pentium® III Processor in the S.E.C.C.2 Packaging (Fan Power Cable Not Shown)

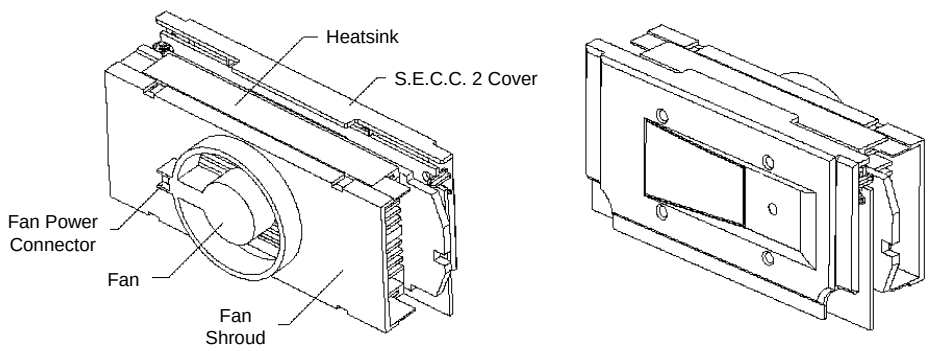

6.2 Fan Heatsink Mechanical Specifications

This section documents the mechanical specifications of the boxed Pentium III processor fan heatsinks. Baseboard manufacturers and system designers should take into account the spacial requirement for the boxed Pentium III processor in the S.E.C.C.2 package.

6.2.1 Intel® Boxed Processor Fan Heatsink Dimensions

The boxed processor is shipped with an attached fan heatsink. Clearance is required around the fan heatsink to ensure unimpeded air flow for proper cooling. Spacial requirements and dimensions for the boxed processor in S.E.C.C.2 package are shown in Figure 51 (Side View), Figure 52 (Front View), and Figure 53 (Top View). All dimensions are in inches.

Downloaded from Arrow.com.

Figure 51. Side View Space Requirements for the Intel® Boxed Processor with S.E.C.C.2 Packaging

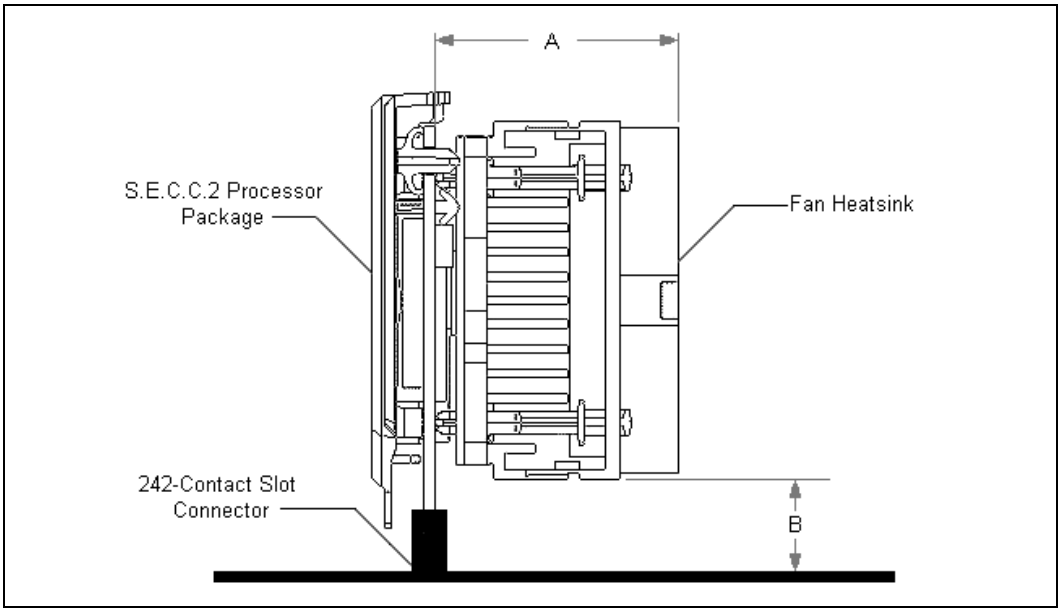

Figure 52. Front View Space Requirements for the Intel® Boxed Processor with S.E.C.C.2 Packaging

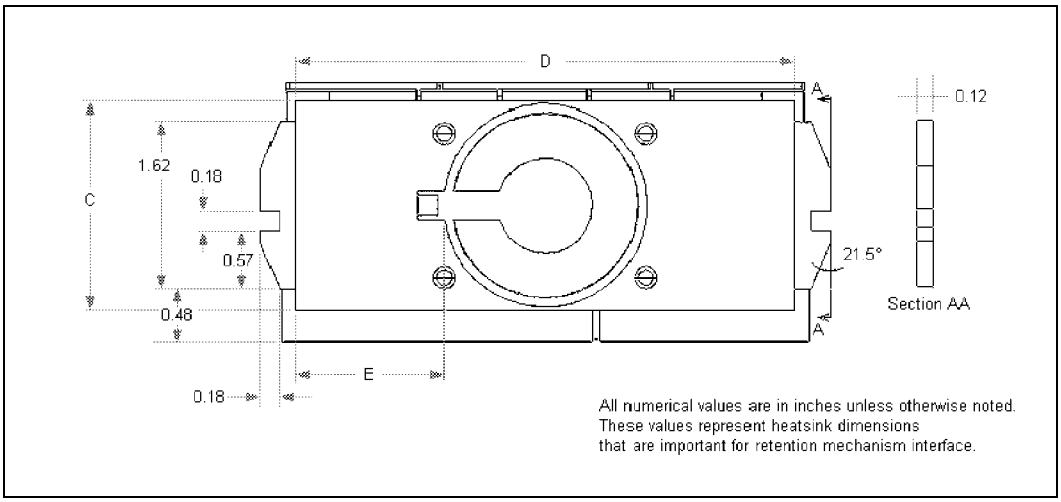

Downloaded from Arrow.com.

Figure 53. Top View Air Space Requirements for the Intel® Boxed Processor

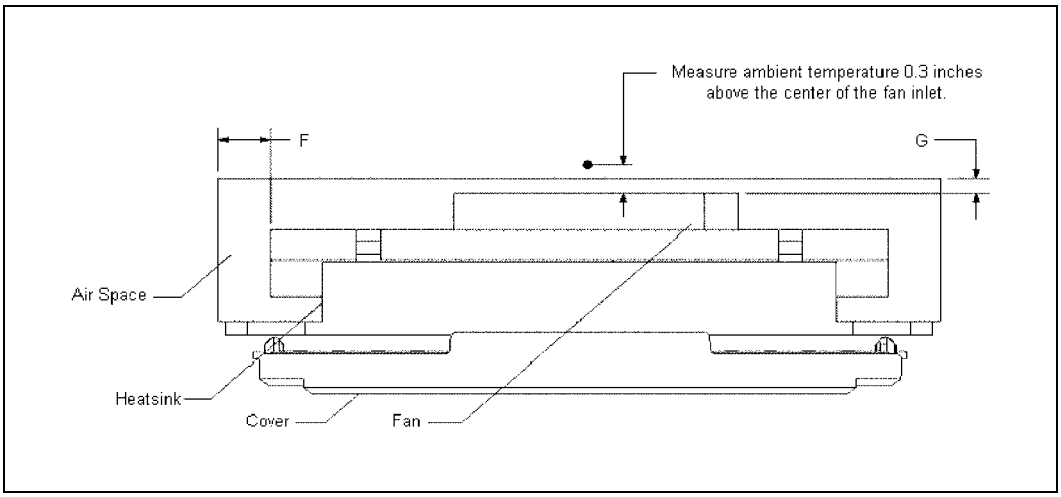

Table 38. Intel® Boxed Processor Fan Heatsink Spatial Dimensions

Fig. Ref. Label	Refers to Figure	Dimensions (Inches)	Min	Typ	Max
A	51	S.E.C.C.2 Fan Heatsink Depth (off processor substrate)			1.48
B	51	S.E.C.C.2 Fan Heatsink Height Above Baseboard	0.4		
C	52	S.E.C.C.2 Fan Heatsink Height			2.2
D	52	S.E.C.C.2 Fan Heatsink Width (plastic shroud only)			4.9
E	52	S.E.C.C.2 Power Cable Connector Location from Edge of Fan Heatsink Shroud	1.4		1.45
F	53	Airflow keep-out zones from end of fan heatsink	0.40		
G	53	Airflow keep-out zones from face of fan heatsink	0.20		

6.2.2 Intel® Boxed Processor Fan Heatsink Weight

The boxed processor fan heatsink will not weigh more than 225 grams. See Section 4.0 and Section 5.0 for details on the processor weight and heatsink requirements.

6.2.3 Intel® Boxed Processor Retention Mechanism

The boxed processor requires processor retention mechanism(s) to secure the processor in the 242-contact slot connector. S.E.C.C.2 processors must use either retention mechanisms described in AP-826, *Mechanical Assembly and Customer Manufacturing Technology for S.E.P. Packages* (Document Number 243748) or Universal Retention Mechanisms that accept S.E.C.C., S.E.P.P. and S.E.C.C.2 packaged processors. The boxed processor will **not** ship with a retention mechanism. Baseboards designed for use by system integrators **must** include retention mechanisms that support the S.E.C.C.2 package and the appropriate installation instructions.

Downloaded from Arrow.com.

Baseboards designed to accept both Pentium II processors and Pentium III processors have component height restrictions for passive heatsink support designs, as described in AP-588, *Mechanical and Assembly Technology for S.E.C. Cartridge Processors* (Document Number 243333).

6.3 Fan Heatsink Electrical Requirements

6.3.1 Fan Heatsink Power Supply

The boxed processor's fan heatsink requires a +12 V power supply. A fan power cable will be shipped with the boxed processor to draw power from a power header on the baseboard. The power cable connector and pinout are shown in Figure 54. Baseboards must provide a matched power header to support the boxed processor. Table 39 contains specifications for the input and output signals at the fan heatsink connector. The cable length will be 7.0 ±0.25 inches. The fan heatsink outputs a SENSE signal, which is an open-collector output, that pulses at a rate of two pulses per fan revolution. A baseboard pull-up resistor (~12 kΩ) provides V_{OH} to match the baseboard-mounted fan speed monitor requirements, if applicable. Use of the SENSE signal is optional. If the SENSE signal is not used, pin 3 of the connector should be tied to GND.

The power header on the baseboard must be positioned to allow the fan heatsink power cable to reach it. The power header identification and location should be documented in the baseboard documentation, or on the baseboard itself. Figure 54 shows the location of the fan power connector relative to the 242-contact slot connector. The baseboard power header should be positioned within 4.75 inches (lateral) of the fan power connector.

Figure 54. Intel® Boxed Processor Fan Heatsink Power Cable Connector Description

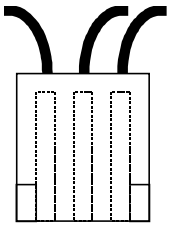

Pin	Signal	
1	GND	Straight square pin, 3-pin terminal housing with polarizing ribs and friction locking ramp.
2	+12V	0.100" pin pitch, 0.025" square pin width.
3	SENSE	Waldom/Molex P/N 22-01-3037 or equivalent.

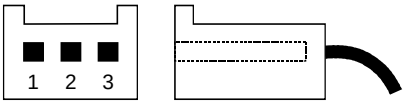

Match with straight pin, friction lock header on motherboard Waldom/Molex P/N 22-23-2031, AMP P/N 640456-3, or equivalent.

Table 39. Fan Heatsink Power and Signal Specifications

Description	Min	Typ	Max
+12 V: 12 volt fan power supply	9 V	12 V	13.8 V
I_C: Fan current draw			100 mA
Ics: Fan sense signal current			10 mA
SENSE: SENSE frequency (baseboard should pull this pin up to appropriate Vcc with resistor)		2 pulses per fan revolution	

Downloaded from Arrow.com.

Figure 55. Recommended Baseboard Power Header Placement Relative to Fan Power Connector and Intel® Pentium® III Processor

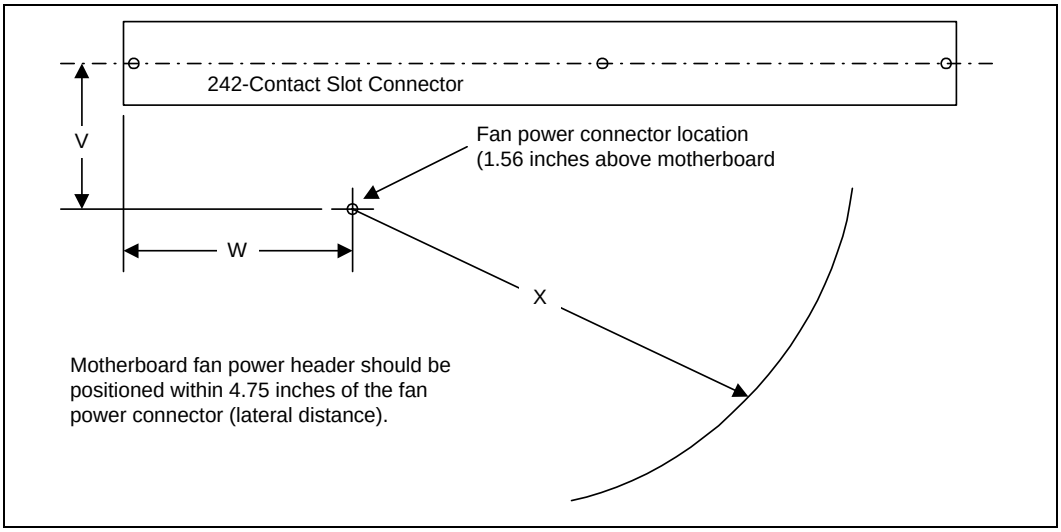

Table 40. Baseboard Fan Power Connector Location

Fig. Ref. Labels	Dimensions (Inches)	Min	Typ	Max
V	Approximate perpendicular distance of the fan power connector from the center of the 242-contact slot connector		1.44	
W	Approximate parallel distance of the fan power connector from the edge of the 242-contact slot connector		1.45	
X	Lateral distance of the baseboard fan power header location from the fan power connector			4.75

6.4 Fan Heatsink Thermal Specifications

This section describes the cooling requirements of the fan heatsink solution utilized by the boxed processor.

6.4.1 Intel® Boxed Processor Cooling Requirements

The boxed processor will be directly cooled with a fan heatsink. However, meeting the processor's temperature specification is also a function of the thermal design of the entire system, and ultimately the responsibility of the system integrator. Refer to Section 4.0 for processor temperature specifications. The boxed processor fan heatsink is able to keep the processor temperature within the specifications (see Table 25 and Table 26) in chassis that provide good thermal management. For the boxed processor fan heatsink to operate properly, it is critical that the airflow provided to the fan heatsink is unimpeded. Airspace is required around the fan to ensure that the airflow through the fan heatsink is not blocked. Blocking the airflow to the fan heatsink reduces the cooling efficiency and decreases fan life. Figure 53 illustrates an acceptable airspace clearance for the fan heatsink. It is also recommended that the air temperature entering the fan be kept below 45 °C (see Figure 53 for measurement location). Again, meeting the processor's temperature specification is the responsibility of the system integrator. Refer to Section 4.0 for processor temperature specifications.

Downloaded from Arrow.com.

7.0 Intel® Pentium® III Processor Signal Description

This section provides an alphabetical listing of all Pentium III processor signals. The tables at the end of this section summarize the signals by direction: output, input, and I/O.

7.1 Alphabetical Signals Reference

Table 41. Signal Description (Sheet 1 of 7)

Name	Type	Description
A[35:3]#	I/O	The A[35:3]# (Address) signals define a 2^{36}-byte physical memory address space. When ADS# is active, these pins transmit the address of a transaction; when ADS# is inactive, these pins transmit transaction type information. These signals must connect the appropriate pins of all agents on the processor system bus. The A[35:24]# signals are parity-protected by the AP1# parity signal, and the A[23:3]# signals are parity-protected by the AP0# parity signal. On the active-to-inactive transition of RESET#, the processors sample the A[35:3]# pins to determine their power-on configuration. See the *Intel® Pentium® II Processor Developer's Manual* (Document Number 243502) for details.
A20M#	I	If the A20M# (Address-20 Mask) input signal is asserted, the processor masks physical address bit 20 (A20#) before looking up a line in any internal cache and before driving a read/write transaction on the bus. Asserting A20M# emulates the 8086 processor's address wrap-around at the 1-Mbyte boundary. Assertion of A20M# is only supported in real mode. A20M# is an asynchronous signal. However, to ensure recognition of this signal following an I/O write instruction, it must be valid along with the TRDY# assertion of the corresponding I/O Write bus transaction.
ADS#	I/O	The ADS# (Address Strobe) signal is asserted to indicate the validity of the transaction address on the A[35:3]# pins. All bus agents observe the ADS# activation to begin parity checking, protocol checking, address decode, internal snoop, or deferred reply ID match operations associated with the new transaction. This signal must connect the appropriate pins on all processor system bus agents.
AERR#	I/O	The AERR# (Address Parity Error) signal is observed and driven by all processor system bus agents, and if used, must connect the appropriate pins on all processor system bus agents. AERR# observation is optionally enabled during power-on configuration; if enabled, a valid assertion of AERR# aborts the current transaction. If AERR# observation is disabled during power-on configuration, a central agent may handle an assertion of AERR# as appropriate to the error handling architecture of the system.
AP[1:0]#	I/O	The AP[1:0]# (Address Parity) signals are driven by the request initiator along with ADS#, A[35:3]#, REQ[4:0]#, and RP#. AP1# covers A[35:24]#, and AP0# covers A[23:3]#. A correct parity signal is high if an even number of covered signals are low and low if an odd number of covered signals are low. This allows parity to be high when all the covered signals are high. AP[1:0]# should connect the appropriate pins of all processor system bus agents.
BCLK	I	The BCLK (Bus Clock) signal determines the bus frequency. All processor system bus agents must receive this signal to drive their outputs and latch their inputs on the BCLK rising edge. All external timing parameters are specified with respect to the BCLK signal.

Downloaded from Arrow.com.

Table 41. Signal Description (Sheet 2 of 7)

Name	Type	Description
BERR#	I/O	The BERR# (Bus Error) signal is asserted to indicate an unrecoverable error without a bus protocol violation. It may be driven by all processor system bus agents, and must connect the appropriate pins of all such agents, if used. However, Pentium III processors do not observe assertions of the BERR# signal. BERR# assertion conditions are configurable at a system level. Assertion options are defined by the following options: • Enabled or disabled. • Asserted optionally for internal errors along with IERR#. • Asserted optionally by the request initiator of a bus transaction after it observes an error. • Asserted by any bus agent when it observes an error in a bus transaction.
BINIT#	I/O	The BINIT# (Bus Initialization) signal may be observed and driven by all processor system bus agents, and if used must connect the appropriate pins of all such agents. If the BINIT# driver is enabled during power on configuration, BINIT# is asserted to signal any bus condition that prevents reliable future information. If BINIT# observation is enabled during power-on configuration, and BINIT# is sampled asserted, all bus state machines are reset and any data which was in transit is lost. All agents reset their rotating ID for bus arbitration to the state after Reset, and internal count information is lost. The L1 and L2 caches are not affected. If BINIT# observation is disabled during power-on configuration, a central agent may handle an assertion of BINIT# as appropriate to the error handling architecture of the system.
BNR#	I/O	The BNR# (Block Next Request) signal is used to assert a bus stall by any bus agent who is unable to accept new bus transactions. During a bus stall, the current bus owner cannot issue any new transactions. Since multiple agents might need to request a bus stall at the same time, BNR# is a wire-OR signal which must connect the appropriate pins of all processor system bus agents. In order to avoid wire-OR glitches associated with simultaneous edge transitions driven by multiple drivers, BNR# is activated on specific clock edges and sampled on specific clock edges.
BP[3:2]#	I/O	The BP[3:2]# (Breakpoint) signals are outputs from the processor that indicate the status of breakpoints.
BPM[1:0]#	I/O	The BPM[1:0]# (Breakpoint Monitor) signals are breakpoint and performance monitor signals. They are outputs from the processor which indicate the status of breakpoints and programmable counters used for monitoring processor performance.
BPRI#	I	The BPRI# (Bus Priority Request) signal is used to arbitrate for ownership of the processor system bus. It must connect the appropriate pins of all processor system bus agents. Observing BPRI# active (as asserted by the priority agent) causes all other agents to stop issuing new requests, unless such requests are part of an ongoing locked operation. The priority agent keeps BPRI# asserted until all of its requests are completed, then releases the bus by deasserting BPRI#.

Downloaded from Arrow.com.

Table 41. Signal Description (Sheet 3 of 7)

<table>
<tr><th>Name</th><th>Type</th><th>Description</th></tr>
<tr><td>BR0#
BR1#</td><td>I/O
I</td><td>The BR0# and BR1# (Bus Request) pins drive the BREQ[1:0]# signals in the system. The BREQ[1:0]# signals are interconnected in a rotating manner to individual processor pins. The table below gives the rotating interconnect between the processor and bus signals.

BR0# (I/O) and BR1# Signals Rotating Interconnect
<table>
<tr><th>Bus Signal</th><th>Agent 0 Pins</th><th>Agent 1 Pins</th></tr>
<tr><td>BREQ0#</td><td>BR0#</td><td>BR1#</td></tr>
<tr><td>BREQ1#</td><td>BR1#</td><td>BR0#</td></tr>
</table>
During power-up configuration, the central agent must assert the BR0# bus signal. All symmetric agents sample their BR[1:0]# pins on active-to-inactive transition of RESET#. The pin on which the agent samples an active level determines its symmetric agent ID. All agents then configure their pins to match the appropriate bu signal protocol, as shown below.

BR[1:0]# Signal Agent IDs
<table>
<tr><th>Pin Sampled Active in RESET#</th><th>Agent ID</th></tr>
<tr><td>BR0#</td><td>0</td></tr>
<tr><td>BR1#</td><td>1</td></tr>
</table></td></tr>
<tr><td>BSEL[1:0]</td><td>I/O</td><td>These signals are used to select the system bus frequency. A BSEL[1:0] = 01 will select a 100 MHz system bus and a BSEL[1:0] = 11 will select a 133 MHz system bus frequency. The frequency is determined by the processor(s), chipset, and frequency synthesizer capabilities. All system bus agents must operate at the same frequency. The Pentium III processor operates at 100 MHz and 133 MHz system bus frequencies. Individual processors will only operate at their specified system bus frequency. Either 100 MHz or 133 MHz, not both.

On motherboards which support operation at either 66 MHz or 100 MHz, a BSEL[1:0] = x0 will select a 66 MHz system bus frequency.

These signals must be pulled up to 3.3 V with 1 kΩ resistors and provided as frequency selection signal to the clock driver/synthesizer. If the system motherboard is not capable of operating at 133 MHz, it should ground the BSEL1 signal and generate a 100 MHz system bus frequency. See Section 2.8.2 for implementation details.</td></tr>
<tr><td>D[63:0]#</td><td>I/O</td><td>The D[63:0]# (Data) signals are the data signals. These signals provide a 64-bit data path between the processor system bus agents, and must connect the appropriate pins on all such agents. The data driver asserts DRDY# to indicate a valid data transfer.</td></tr>
<tr><td>DBSY#</td><td>I/O</td><td>The DBSY# (Data Bus Busy) signal is asserted by the agent responsible for driving data on the processor system bus to indicate that the data bus is in use. The data bus is released after DBSY# is deasserted. This signal must connect the appropriate pins on all processor system bus agents.</td></tr>
<tr><td>DEFER#</td><td>I</td><td>The DEFER# signal is asserted by an agent to indicate that a transaction cannot be guaranteed in-order completion. Assertion of DEFER# is normally the responsibility of the addressed memory or I/O agent. This signal must connect the appropriate pins of all processor system bus agents.</td></tr>
<tr><td>DEP[7:0]#</td><td>I/O</td><td>The DEP[7:0]# (Data Bus ECC Protection) signals provide optional ECC protection for the data bus. They are driven by the agent responsible for driving D[63:0]#, and must connect the appropriate pins of all processor system bus agents which use them. The DEP[7:0]# signals are enabled or disabled for ECC protection during power on configuration.</td></tr>
<tr><td>DRDY#</td><td>I/O</td><td>The DRDY# (Data Ready) signal is asserted by the data driver on each data transfer, indicating valid data on the data bus. In a multi-cycle data transfer, DRDY# may be deasserted to insert idle clocks. This signal must connect the appropriate pins of all processor system bus agents.</td></tr>
</table>

Downloaded from Arrow.com.

Table 41. Signal Description (Sheet 4 of 7)

Name	Type	Description
EMI	I	EMI pins should be connected to baseboard ground and/or to chassis ground through zero ohm (0 Ω) resistors. The 0 Ω resistors should be placed in close proximity to the processor connector. The path to chassis ground should be short in length and have a low impedance. These pins are used for EMI management purposes.
FERR#	O	The FERR# (Floating-point Error) signal is asserted when the processor detects an unmasked floating-point error. FERR# is similar to the ERROR# signal on the Intel 387 coprocessor, and is included for compatibility with systems using MS-DOS*-type floating-point error reporting.
FLUSH#	I	When the FLUSH# input signal is asserted, processors write back all data in the Modified state from their internal caches and invalidate all internal cache lines. At the completion of this operation, the processor issues a Flush Acknowledge transaction. The processor does not cache any new data while the FLUSH# signal remains asserted. FLUSH# is an asynchronous signal. However, to ensure recognition of this signal following an I/O write instruction, it must be valid along with the TRDY# assertion of the corresponding I/O Write bus transaction. On the active-to-inactive transition of RESET#, each processor samples FLUSH# to determine its power-on configuration. See the *P6 Family of Processors Hardware Developer's Manual* (Document Number 244001) for details.
HIT# HITM#	I/O I/O	The HIT# (Snoop Hit) and HITM# (Hit Modified) signals convey transaction snoop operation results, and must connect the appropriate pins of all processor system bus agents. Any such agent may assert both HIT# and HITM# together to indicate that it requires a snoop stall, which can be continued by reasserting HIT# and HITM# together.
IERR#	O	The IERR# (Internal Error) signal is asserted by a processor as the result of an internal error. Assertion of IERR# is usually accompanied by a SHUTDOWN transaction on the processor system bus. This transaction may optionally be converted to an external error signal (e.g., NMI) by system core logic. The processor will keep IERR# asserted until the assertion of RESET#, BINIT#, or INIT#.
IGNNE#	I	The IGNNE# (Ignore Numeric Error) signal is asserted to force the processor to ignore a numeric error and continue to execute noncontrol floating-point instructions. If IGNNE# is deasserted, the processor generates an exception on a noncontrol floating-point instruction if a previous floating-point instruction caused an error. IGNNE# has no effect when the NE bit in control register 0 is set. IGNNE# is an asynchronous signal. However, to ensure recognition of this signal following an I/O write instruction, it must be valid along with the TRDY# assertion of the corresponding I/O Write bus transaction.
INIT#	I	The INIT# (Initialization) signal, when asserted, resets integer registers inside all processors without affecting their internal (L1 or L2) caches or floating-point registers. Each processor then begins execution at the power-on Reset vector configured during power-on configuration. The processor continues to handle snoop requests during INIT# assertion. INIT# is an asynchronous signal and must connect the appropriate pins of all processor system bus agents. If INIT# is sampled active on the active to inactive transition of RESET#, then the processor executes its Built-in Self-Test (BIST).
LINT[1:0]	I	The LINT[1:0] (Local APIC Interrupt) signals must connect the appropriate pins of all APIC Bus agents, including all processors and the core logic or I/O APIC component. When the APIC is disabled, the LINT0 signal becomes INTR, a maskable interrupt request signal, and LINT1 becomes NMI, a nonmaskable interrupt. INTR and NMI are backward compatible with the signals of those names on the Pentium processor. Both signals are asynchronous. Both of these signals must be software configured via BIOS programming of the APIC register space to be used either as NMI/INTR or LINT[1:0]. Because the APIC is enabled by default after Reset, operation of these pins as LINT[1:0] is the default configuration.

Downloaded from Arrow.com.

Table 41. Signal Description (Sheet 5 of 7)

Name	Type	Description
LOCK#	I/O	The LOCK# signal indicates to the system that a transaction must occur atomically. This signal must connect the appropriate pins of all processor system bus agents. For a locked sequence of transactions, LOCK# is asserted from the beginning of the first transaction end of the last transaction. When the priority agent asserts BPRI# to arbitrate for ownership of the processor system bus, it will wait until it observes LOCK# deasserted. This enables symmetric agents to retain ownership of the processor system bus throughout the bus locked operation and ensure the atomicity of lock.
PICCLK	I	The PICCLK (APIC Clock) signal is an input clock to the processor and core logic or I/O APIC which is required for operation of all processors, core logic, and I/O APIC components on the APIC bus.
PICD[1:0]	I/O	The PICD[1:0] (APIC Data) signals are used for bidirectional serial message passing on the APIC bus, and must connect the appropriate pins of all processors and core logic or I/O APIC components on the APIC bus.
PRDY#	O	The PRDY (Probe Ready) signal is a processor output used by debug tools to determine processor debug readiness.
PREQ#	I	The PREQ# (Probe Request) signal is used by debug tools to request debug operation of the processors.
PWRGOOD	I	The PWRGOOD (Power Good) signal is a 2.5 V tolerant processor input. The processor requires this signal to be a clean indication that the clocks and power supplies (VCC_{CORE}, etc.) are stable and within their specifications. Clean implies that the signal will remain low (capable of sinking leakage current), without glitches, from the time that the power supplies are turned on until they come within specification. The signal must then transition monotonically to a high (2.5 V) state. The figure below illustrates the relationship of PWRGOOD to other system signals. PWRGOOD can be driven inactive at any time, but clocks and power must again be stable before a subsequent rising edge of PWRGOOD. It must also meet the minimum pulse width specification in Table 15, and be followed by a 1 ms RESET# pulse. The PWRGOOD signal must be supplied to the processor; it is used to protect internal circuits against voltage sequencing issues. It should be driven high throughout boundary scan operation. **PWRGOOD Relationship at Power-On** 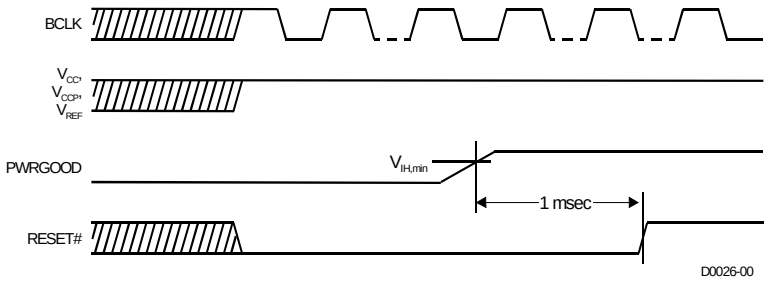
REQ[4:0]#	I/O	The REQ[4:0]# (Request Command) signals must connect the appropriate pins of all processor system bus agents. They are asserted by the current bus owner over two clock cycles to define the currently active transaction type.

Downloaded from Arrow.com.

Table 41. Signal Description (Sheet 6 of 7)

Name	Type	Description
RESET#	I	Asserting the RESET# signal resets all processors to known states and invalidates their L1 and L2 caches without writing back any of their contents. For a Power-on or "warm" reset, RESET# must stay active for at least one millisecond after Vcc_{CORE} and CLK have reached their proper specifications. On observing active RESET#, all processor system bus agents will deassert their outputs within two clocks. A number of bus signals are sampled at the active-to-inactive transition of RESET# for power-on configuration. These configuration options are described in the *P6 Family of Processors Hardware Developer's Manual* (Document Number 244001) for details. The processor may have its outputs tristated via power-on configuration. Otherwise, if INIT# is sampled active during the active-to-inactive transition of RESET#, the processor will execute its Built-in Self-Test (BIST). Whether or not BIST is executed, the processor will begin program execution at the power on Reset vector (default 0_FFFF_FFF0h). RESET# must connect the appropriate pins of all processor system bus agents.
RP#	I/O	The RP# (Request Parity) signal is driven by the request initiator, and provides parity protection on ADS# and REQ[4:0]#. It must connect the appropriate pins of all processor system bus agents. A correct parity signal is high if an even number of covered signals are low and low if an odd number of covered signals are low. This definition allows parity to be high when all covered signals are high.
RS[2:0]#	I	The RS[2:0]# (Response Status) signals are driven by the response agent (the agent responsible for completion of the current transaction), and must connect the appropriate pins of all processor system bus agents.
RSP#	I	The RSP# (Response Parity) signal is driven by the response agent (the agent responsible for completion of the current transaction) during assertion of RS[2:0]#, the signals for which RSP# provides parity protection. It must connect the appropriate pins of all processor system bus agents. A correct parity signal is high if an even number of covered signals are low and low if an odd number of covered signals are low. While RS[2:0]# = 000, RSP# is also high, since this indicates it is not being driven by any agent guaranteeing correct parity.
SLOTOCC#	O	The SLOTOCC# signal is defined to allow a system design to detect the presence of a terminator card or processor in a SC242 connector. Combined with the VID combination of VID[4:0]= 11111 (see Section 2.6), a system can determine if a SC242 connector is occupied, and whether a processor core is present. See the table below for states and values for determining the type of cartridge in the SC242 connector. **SC242 Occupation Truth Table** Signal: SLOTOCC# VID[4:0] — Value: 0 Anything other than '11111' — Status: Processor with core in SC242 connector. Signal: SLOTOCC# VID[4:0] — Value: 0 11111 — Status: Terminator cartridge in SC242 connector (i.e., no core present). Signal: SLOTOCC# VID[4:0] — Value: 1 Any value — Status: SC242 connector not occupied.
SLP#	I	The SLP# (Sleep) signal, when asserted in Stop-Grant state, causes processors to enter the Sleep state. During Sleep state, the processor stops providing internal clock signals to all units, leaving only the Phase-Locked Loop (PLL) still operating. Processors in this state will not recognize snoops or interrupts. The processor will recognize only assertions of the SLP#, STPCLK#, and RESET# signals while in Sleep state. If SLP# is deasserted, the processor exits Sleep state and returns to Stop-Grant state, restarting its internal clock signals to the bus and APIC processor core units.

Downloaded from Arrow.com.

Table 41. Signal Description (Sheet 7 of 7)

Name	Type	Description
SMI#	I	The SMI# (System Management Interrupt) signal is asserted asynchronously by system logic. On accepting a System Management Interrupt, processors save the current state and enter System Management Mode (SMM). An SMI Acknowledge transaction is issued, and the processor begins program execution from the SMM handler.
STPCLK#	I	The STPCLK# (Stop Clock) signal, when asserted, causes processors to enter a low power Stop-Grant state. The processor issues a Stop-Grant Acknowledge transaction, and stops providing internal clock signals to all processor core units except the bus and APIC units. The processor continues to snoop bus transactions and service interrupts while in Stop-Grant state. When STPCLK# is deasserted, the processor restarts its internal clock to all units and resumes execution. The assertion of STPCLK# has no effect on the bus clock; STPCLK# is an asynchronous input.
TCK	I	The TCK (Test Clock) signal provides the clock input for the processor Test Bus (also known as the Test Access Port).
TDI	I	The TDI (Test Data In) signal transfers serial test data into the processor. TDI provides the serial input needed for JTAG specification support.
TDO	O	The TDO (Test Data Out) signal transfers serial test data out of the processor. TDO provides the serial output needed for JTAG specification support.
TESTHI	I	The TESTHI signal must be connected to a 2.5 V power source through a 1–100 kΩ resistor for proper processor operation.
THERMDN	O	Thermal Diode Cathode. Used to calculate core temperature. See Section 4.1.
THERMDP	I	Thermal Diode Anode. Used to calculate core temperature. See Section 4.1.
THERMTRIP#	O	The processor protects itself from catastrophic overheating by use of an internal thermal sensor. This sensor is set well above the normal operating temperature to ensure that there are no false trips. The processor will stop all execution when the junction temperature exceeds approximately 135 °C. This is signaled to the system by the THERMTRIP# (Thermal Trip) pin. Once activated, the signal remains latched, and the processor stopped, until RESET# goes active. There is no hysteresis built into the thermal sensor itself; as long as the die temperature drops below the trip level, a RESET# pulse will reset the processor and execution will continue. If the temperature has not dropped below the trip level, the processor will continue to drive THERMTRIP# and remain stopped.
TMS	I	The TMS (Test Mode Select) signal is a JTAG specification support signal used by debug tools.
TRDY#	I	The TRDY# (Target Ready) signal is asserted by the target to indicate that it is ready to receive a write or implicit writeback data transfer. TRDY# must connect the appropriate pins of all processor system bus agents.
TRST#	I	The TRST# (Test Reset) signal resets the Test Access Port (TAP) logic. TRST# must be driven low during power on Reset. This can be done with a 680 Ω pull-down resistor.
VID[4:0]	O	The VID[4:0] (Voltage ID) pins can be used to support automatic selection of power supply voltages. These pins are not signals, but are either an open circuit or a short circuit to V_{SS} on the processor. The combination of opens and shorts defines the voltage required by the processor. The VID pins are needed to cleanly support voltage specification variations on processors. See Table 3 for definitions of these pins. The power supply must supply the voltage that is requested by these pins, or disable itself.

Downloaded from Arrow.com.

7.2 Signal Summaries

Table 42 through Table 45 list attributes of the processor output, input, and I/O signals.

Table 42. Output Signals

Name	Active Level	Clock	Signal Group
FERR#	Low	Asynch	CMOS Output
IERR#	Low	Asynch	CMOS Output
PRDY#	Low	BCLK	AGTL+ Output
SLOTOCC#	Low	Asynch	Power/Other
TDO	High	TCK	TAP Output
THERMTRIP#	Low	Asynch	CMOS Output
VID[4:0]	High	Asynch	Power/Other

Table 43. Input Signals

Name	Active Level	Clock	Signal Group	Qualified
A20M#	Low	Asynch	CMOS Input	Always[1]
BPRI#	Low	BCLK	AGTL+ Input	Always
BR1#	Low	BCLK	AGTL+ Input	Always
BCLK	High	—	System Bus Clock	Always
DEFER#	Low	BCLK	AGTL+ Input	Always
FLUSH#	Low	Asynch	CMOS Input	Always[1]
IGNNE#	Low	Asynch	CMOS Input	Always[1]
INIT#	Low	Asynch	CMOS Input	Always[1]
INTR	High	Asynch	CMOS Input	APIC disabled mode
LINT[1:0]	High	Asynch	CMOS Input	APIC enabled mode
NMI	High	Asynch	CMOS Input	APIC disabled mode
PICCLK	High	—	APIC Clock	Always
PREQ#	Low	Asynch	CMOS Input	Always
PWRGOOD	High	Asynch	CMOS Input	Always
RESET#	Low	BCLK	AGTL+ Input	Always
RS[2:0]#	Low	BCLK	AGTL+ Input	Always
RSP#	Low	BCLK	AGTL+ Input	Always
SLP#	Low	Asynch	CMOS Input	During Stop-Grant state
SMI#	Low	Asynch	CMOS Input	
STPCLK#	Low	Asynch	CMOS Input	
TCK	High	—	TAP Input	
TDI	High	TCK	TAP Input	
TESTHI	High	Asynch	Power/Other	Always
TMS	High	TCK	TAP Input	
TRST#	Low	Asynch	TAP Input	
TRDY#	Low	BCLK	AGTL+ Input	

NOTE:
1. Synchronous assertion with active TDRY# ensures synchronization.

Downloaded from Arrow.com.

Table 44. Input/Output Signals (Single Driver)

Name	Active Level	Clock	Signal Group	Qualified
BSEL[1:0]	High	Asynch	Power/Other	Always
A[35:3]#	Low	BCLK	AGTL+ I/O	ADS#, ADS#+1
ADS#	Low	BCLK	AGTL+ I/O	Always
AP[1:0]#	Low	BCLK	AGTL+ I/O	ADS#, ADS#+1
BR0#	Low	BCLK	AGTL+ I/O	Always
BP[3:2]#	Low	BCLK	AGTL+ I/O	Always
BPM[1:0]#	Low	BCLK	AGTL+ I/O	Always
D[63:0]#	Low	BCLK	AGTL+ I/O	DRDY#
DBSY#	Low	BCLK	AGTL+ I/O	Always
DEP[7:0]#	Low	BCLK	AGTL+ I/O	DRDY#
DRDY#	Low	BCLK	AGTL+ I/O	Always
LOCK#	Low	BCLK	AGTL+ I/O	Always
REQ[4:0]#	Low	BCLK	AGTL+ I/O	ADS#, ADS#+1
RP#	Low	BCLK	AGTL+ I/O	ADS#, ADS#+1

Table 45. Input/Output Signals (Multiple Driver)

Name	Active Level	Clock	Signal Group	Qualified
AERR#	Low	BCLK	AGTL+ I/O	ADS#+3
BERR#	Low	BCLK	AGTL+ I/O	Always
BNR#	Low	BCLK	AGTL+ I/O	Always
BINIT#	Low	BCLK	AGTL+ I/O	Always
HIT#	Low	BCLK	AGTL+ I/O	Always
HITM#	Low	BCLK	AGTL+ I/O	Always
PICD[1:0]	High	PICCLK	APIC I/O	Always

Downloaded from Arrow.com.